MISSION-CRITICAL
INTERCONNECT
SOLUTIONS

Glenair®

AEROSPACE-GRADE

Rectangular Connector Backshells and Accessories

for D-Subminiature, M83513 Micro-D, Series 28 HiPer-D, Series 79 Micro-Crimp, M83733, DPX, ARINC 600 and more

JUNE 2024

AEROSPACE-GRADE
RECTANGULAR
CONNECTOR
BACKSHELLS AND
ACCESSORIES

Backshells

Comprehensive range of material and plating classes available. See individual how-to-order pages for recommended finish codes.

Glenair Accessory Material and Finish Code Performance

Code	Material	Finish	Specification	Salt Spray Hours	Temperature Range (°C)	Conductive Yes/No	RoHS Yes/No
C	Aluminum	Anodize, Black	AMS-A-8625	500	-65 to +200	No	Yes
JF	Aluminum	Gold Chromate over Cad over Nickel	AMS-QQ-P-416	1000	-65 to +200	Yes	No
G2	Aluminum	Anodize, Hardcoat, Undyed	AMS-A-8625	500	-65 to +200	No	Yes
M	Aluminum	Electroless Nickel	AMS-C-26074	96	-65 to +200	Yes	Yes
MA	Aluminum	Electroless Nickel, Matte Finish	AMS-C-26074	96	-65 to +200	Yes	Yes
ME	Aluminum	Electroless Nickel, Heavy	AMS-C-26074	96	-65 to +200	Yes	Yes
MN	Aluminum	MegaNickel	AMS-C-26074	1000	-65 to +200	Yes	Yes
MT	Aluminum	Nickel-PTFE	AMS2524	500	-65 to +175	Yes	Yes
NF	Aluminum	Cadmium, Olive Drab Chromate	AMS-QQ-P-416	1000	-65 to +175	Yes	No
TZ	Aluminum	Tin-Zinc	AMS2434	1000	-65 to +175	Yes	Yes
XB	Composite	Unplated, Black Color	N/A	2000	-65 to +200	No	Yes
XM	Composite	Electroless Nickel	AMS-C-26074	2000	-65 to +200	Yes	Yes
XMT	Composite	Nickel-PTFE	AMS2524	2000	-65 to +175	Yes	Yes
XW	Composite	Cadmium, Olive Drab Chromate	AMS-QQ-P-416	1000	-65 to +175	Yes	No
Z1	Stainless Steel	Passivated	AMS-QQ-P-35	1000	-65 to +200	Yes	Yes
ZL	Stainless Steel	Electrodeposited Nickel	AMS-QQ-N-290	500	-65 to +200	Yes	Yes
ZM	Stainless Steel	Electroless Nickel	AMS-C-26074	1000	-65 to +200	Yes	Yes
ZMT	Stainless Steel	Nickel-PTFE	AMS2524	1000	-65 to +175	Yes	Yes
ZR	Aluminum	Zinc-Nickel, Black Chromate	AMS2417	1000	-65 to +175	Yes	Yes
ZU	Stainless Steel	Cadmium, Black Chromate	AMS-QQ-P-416	1000	-65 to +175	Yes	No

For new design applications, Glenair lists recommended material and plating codes on the how-to-order pages for each connector backshell series. Additional material and plating types, however, are available. Glenair can support every required material and plating type necessary to ensure compatibiliy with customer connectors, shielding, and hardware. Consult this connector accessory material and finish master table and/or the factory for non-standard, legacy, or unusual plating requirements.

Go to 3dparts.glenair.com for 3D part models in all popular CAD formats for the complete range of Glenair backshells and connector accessories.

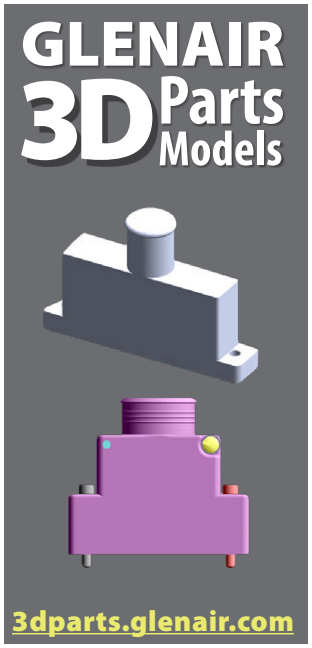

Table of Contents

Band Straps and Tools		**Band-Master ATS® Shield Termination System** Glenair signature band strap technology and tools optimized for use with all band-porch-equipped rectangular backshells.	**Selection Guide** Page Intro-1
D-Subminiature M24308 ▪ HiPer-D		**MIL-DTL-24308 and Series 28 HiPer-D** D-Subminiature connector backshells, screwlocks, protective covers, shorting caps, and panel gaskets.	**Selection Guide** Page A-1
Micro-D M83513		**MIL-DTL-83513 and Glenair Signature Micro-D** connector backshells, dust caps, protective covers, jackpost hardware, and panel gaskets.	**Selection Guide** Page B-1
Micro-Crimp Series 79		**Glenair Signature Series 79 Micro-Crimp** connector backshells, dust caps, protective covers, and mounting hardware.	**Selection Guide** Page C-1
ARINC 600 BKA ▪ M83527		**MIL-DTL-83527, BKA, and ARINC 600** connector backshells (Sizes 1, 2, and 3).	**Selection Guide** Page D-1
Modular Rectangular EPXB ▪ BACC65 ▪ SIM ▪ EN4165		**EPXB, BACC65, EN4165, and SIM** modular rectangular connector backshells.	**Selection Guide** Page E-1
AS81969 DPX		**SAE AS81969 and DPX** connector backshells and strain reliefs.	**Selection Guide** Page F-1
M83733 DPKA ▪ DPKB		**MIL-DTL-83733 and DPKA / DPKB** connector backshells.	**Selection Guide** Page G-1

TABLE OF CONTENTS

Band Straps and Tools

Band-Master ATS®

For more information on the Band-Master ATS EMI shield termination system, including instruction manuals and calibration details:
https://www.glenair.com/bandmaster/

Hand Tool for Band Installation
Glenair Band-Master ATS tools are equipped with a built-in counter to ensure required recalibration is performed in accordance with military and commercial aerospace requirements.

High Volume Pneumatic Tool

Terminate cable braid shield to adapter with stainless steel ***Band-Master ATS®*** bands. Install band with hand tool or bench-mounted pneumatic tool. Bands are available in three widths: ***Standard*** (.24 inch), ***Micro*** (.12 inch) and ***Nano*** (.075 inch). ***Slim Standard*** and ***Micro Slim*** bands have reduced thickness for weight reduction. Hardened steel ***Micro-Max*** bands have 60% more tensile strength than standard Micro bands. Available pre-coiled, bands are 304 series stainless steel, passivated.

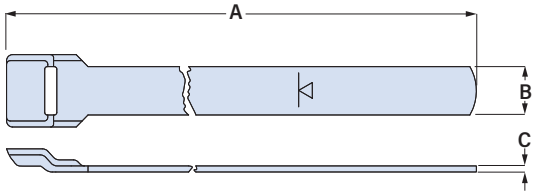

Band Part Numbers

Size	A Length in	A Length mm	Fits up to Dia. in	Fits up to Dia. mm	B Width in	B Width mm	C Thickness in	C Thickness mm	Part Number Pre-coiled	Hand Tool Part Number
Standard	9	228	1.00	25.4	.24	6.1	.02	0.5	601-006	601-100
	14	355	1.80	45.7	.24	6.1	.02	0.5	601-041	
	18	457.	2.50	63.5	.24	6.1	.02	0.5	601-050	
Slim Standard	9	228	.94	23.9	.24	6.1	.01	0.3	601-571	601-109
	14	355	1.80	45.7	.24	6.1	.01	0.3	601-573	
Micro	5	127	.50	12.7	.12	3.0	.015	0.4	601-025	601-101
	8	203	.88	22.4	.12	3.0	.015	0.4	601-061	
	14	356	1.88	47.7	.12	3.0	.015	0.4	601-065	
Micro Slim	8	203	.88	22.4	.12	3.0	.01	0.3	601-601	601-122
	14	356	1.88	47.7	.12	3.0	.01	0.3	601-603	
Micro-Max	8	203	.88	22.4	.12	3.0	.015	0.4	601-701	601-129
	14	356	1.88	47.7	.12	3.0	.015	0.4	601-703	
Nano	6	152	.60	15.2	.075	1.9	.009	0.9	601-501	601-108
	9	229	.94	23.9	.075	1.9	.009	0.9	601-505	
	14	356	1.80	45.7	.075	1.9	.009	0.9	601-509	

Pneumatic Banding Tool Part Numbers

Standard	Standard pneumatic banding tool with counter	601-106
Slim Standard	Slim Standard pneumatic banding tool with counter	601-110
Micro	Micro pneumatic banding tool with counter	601-107
Micro Slim	Micro Slim pneumatic banding tool with counter	601-123
Micro-Max	Micro-Max pneumatic banding tool with counter	601-130
Nano	Nano pneumatic banding tool with counter	601-118

© 2024 Glenair, Inc • 1211 Air Way, Glendale, CA 91201 • 818-247-6000 • www.glenair.com • U.S. CAGE code 06324 • Rectangular Accessories
Dimensions in Inches (millimeters) are subject to change without notice.

Band Straps and Tools

TABLE OF CONTENTS

Hand Banding Tools and Straps

Standard Banding Tool
601-100

Band-Master ATS® Standard Tool Designed for .240" width clamping bands in a tension range from 100 to 180 lbs. Calibrate at 150 lbs. ± 5 lbs. for most shield terminations.

Slim Standard Banding Tool
601-109

Band-Master ATS® Slim Standard Tool For use with slim standard pre-coiled .240" wide clamping bands. Tension range is approximately 30 to 80 lbs. Calibrate at 100 lbs. ± 3 lbs of linear pull.

Micro Banding Tool
601-101

Band-Master ATS® Micro Tool Designed for Micro .120" width clamping bands in a tension range from 50 to 85 lbs. Calibrate at 80 lbs ±5 lbs. for most shield terminations.

Micro Slim Banding Tool
601-122

Band-Master ATS® Micro Slim Tool Designed for Micro Slim .120" width clamping bands in a tension range from 60 to 90 lbs. Calibrate at 82 lbs ±3 lbs. for most terminations.

Nano Banding Tool
601-108

Band-Master ATS® Nano Tool Designed for us with Nano .075" width clamping bands in a tension range from 25 to 90 lbs. Calibrate at 50 lbs. ± 3 lbs. for most shield terminations.

Band-Master ATS® High-Tension Micro-Max Banding Tool

The 601-129 Band-Master ATS® Micro-Max with Counter for use with high-tension, low-resistivity Micro-Max Bands

Designed for use with high-tension Micro-Max .120" width clamping bands. Micro-Max is designed for shield termination requirements to a higher tension range from 100-180 lbs. resulting in lower-resistivity shield termination. Calibrate at 132 ± 3 lbs. for most shield terminations. Tool and Band should never be lubricated.

M24308 TYPE
FOR INDUSTRY-STANDARD AND GLENAIR SERIES 28 HIPER-D

Backshells

Precision-machined D-Sub backshells improve shielding and environmental performance of MIL-DTL-24308 connectors

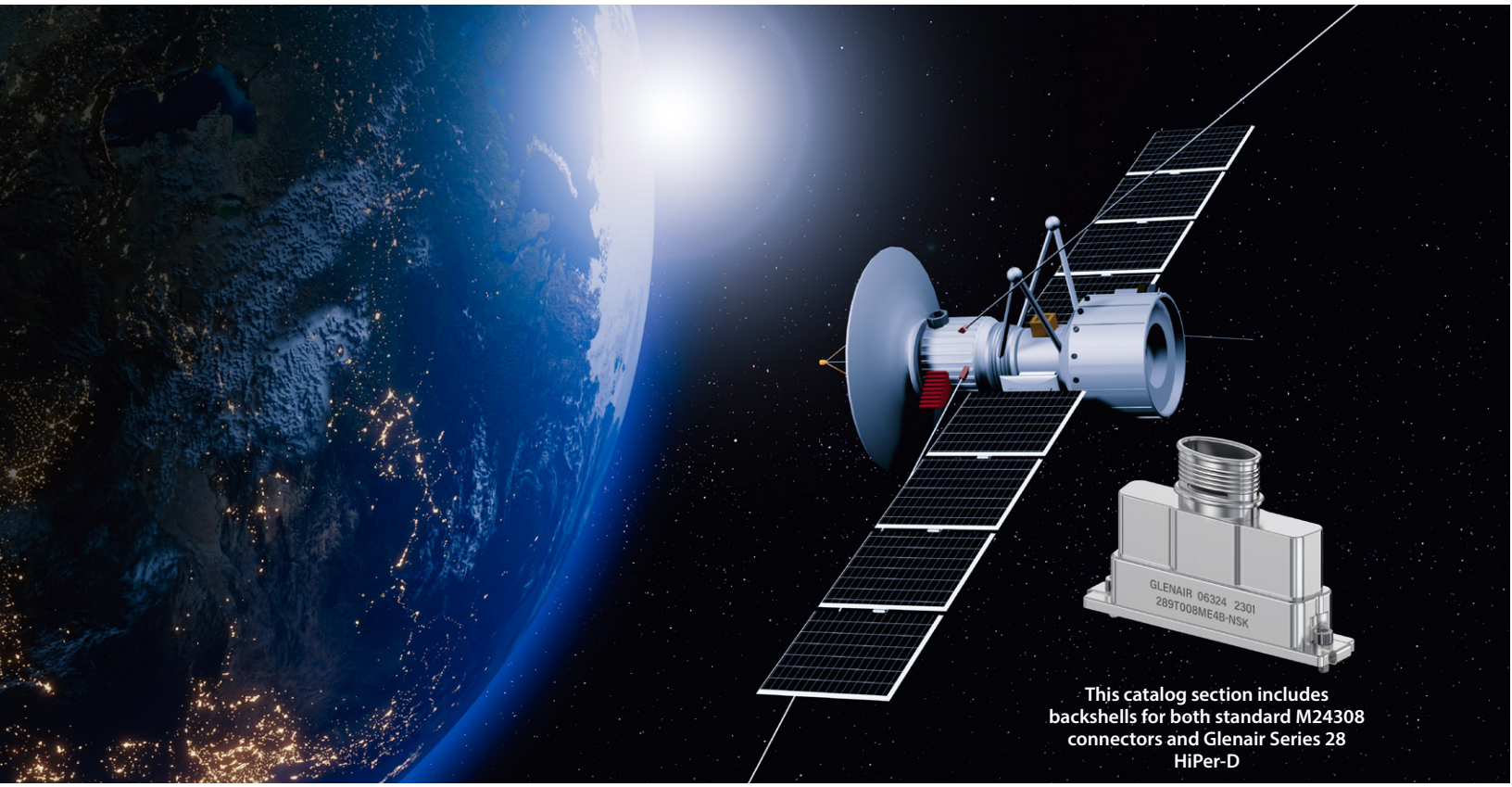

This catalog section includes backshells for both standard M24308 connectors and Glenair Series 28 HiPer-D

Industry-standard M24308 D-Sub connectors are notoriously poor performers in terms of resistance to electromagnetic interference, environmental leakage, and overall mechanical durability. Glenair series backshells for D-Sub connectors are designed to markedly improve the performance of stamped-and-formed D-Subs through the use of fully-shrouded backshell enclosures, robust environmental seals, and durable machined or injection-molded construction. Also in this section, Glenair Series 28 HiPer-D connector backshells are built to advanced-performance standards in accordance with the performance benchmarks of this better-than-QPL D-Sub interconnect.

Glenair Signature Series M24308 Backshells

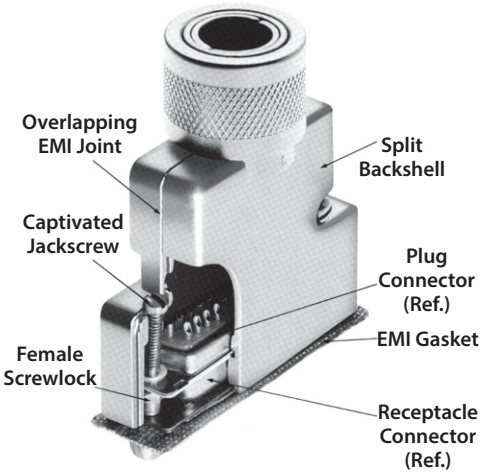

All Series 55 EMI backshells meet or exceed the shielding requirements of MIL-STD-461 (TEMPEST) as well as FCC Part 15 Subpart J on RS 232, RS 449 and similar installations.

D-Subminiature Accessories Selection Guide

Dust Caps & Covers

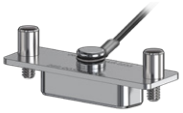

Protective Cover
289-003, -004, -019
Page A-4

Protective Cover, Panel Mounting
500-008
Page A-5

Rubber Cover
780-518
Page A-7

Conductive Plastic Dust Cap
289-052
Page A-8

Potting Shells

Potting Shell
557-666
Page A-9

HiPer-D Potting Shell
289-181
Page A-10

Shorting Caps

Shrouded Split
550-200
Page A-11

Solid Shorting Cap
557-493
Page A-13

HiPer-D Shorting Cap
289-064
Page A-14

Screwlocks

Female Screwlock
289-015
Page A-15

HiPer-D Female Screwlock
289-016
Page A-15

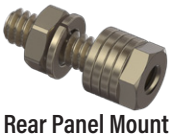

Rear Panel Mount Female Screwlock
559-001
Page A-15

Jackscrew
289-062
Page A-16

Replacement Screwlocks

Screwlocks for Type 1 Shrouded Backshells
687-092, -345
Page A-17

Screwlocks for Type 2 Solid Backshells with .25" Flange
687-172, -236, -418, -626
Page A-19

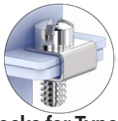

Screwlocks for Type 3 Solid Backshells with .035" Flange
687-316
Page A-21

Panel Gasket

EMI Panel Gasket
559-002
Page A-22

Dummy Stowage

Dummy Stowage Plugs and Receptacles
500-024, 500-068
Page A-23

© 2024 Glenair, Inc • 1211 Air Way, Glendale, CA 91201 • 818-247-6000 • www.glenair.com • U.S. CAGE code 06324 • Rectangular Accessories
Dimensions in Inches (millimeters) are subject to change without notice.

D-Subminiature Backshell Selection Guide

Type 1 Shrouded Backshells

- Rugged split body
- Shrouded design protects connector and enhances EMI performance
- Four shielding styles: banding, braid trap, cone-and-ring, TAG ring
- Connector is captivated between the two halves of the backshell

EMI Cone-and-Ring
550-004
Page A-24

EMI Braid Trap
550-005
Page A-26

EMI Panel Mount
550-009
Page A-28

EMI Banding
550-039
Page A-30

EMI TAG Ring®
550-041
Page A-32

Saddle Clamp
550-100
Page A-34

Qwik-Ty®
550-102
Page A-36

EMI Composite Banding
557-186
Page A-38

Type 2 Solid Backshells

- One piece machined aluminum body
- Lightweight
- Two shielding styles: banding, cone-and-ring
- Backshell attaches to connector with SST clips

EMI Banding
557-071
Page A-43

EMI Cone-and-Ring
557-110
Page A-45

EMI Elliptical Micro Band
557-246
Page A-47

Low Profile EMI Banding
557-316
Page A-49

Low Profile EMI Micro Band
557-432
Page A-51

Straight Clamp
557-467
Page A-53

EMI TAG Ring®
557-553
Page A-54

© 2024 Glenair, Inc • 1211 Air Way, Glendale, CA 91201 • 818-247-6000 • www.glenair.com • U.S. CAGE code 06324 • Rectangular Accessories
Dimensions in Inches (millimeters) are subject to change without notice.

D-Subminiature Backshell Selection Guide

Type 3 Lightweight EMI Backshells

- One piece machined aluminum body
- Thin-wall construction

EMI Banding
557-107
Page A-56

EMI Micro Band
557-281
Page A-58

45° & 90° EMI Banding
557-319
Page A-60

45° & 90° EMI Micro Band
557-561
Page A-62

Split Lip Backshell

- Two piece machined aluminum body
- Round and elliptical banding platform

EMI Banding
557-609
Page A-42

Composite Qwik-Snap Backshell

- Two piece
- Elliptical banding platform

EMI Banding
557-538
Page A-40

HiPer-D EMI Backshells

- One piece machined aluminum body
- For standard D-Sub and HiPer-D connectors

EMI Banding
289-008
Page A-68

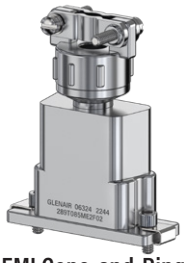

EMI Cone-and-Ring
289-085
Page A-70

HiPer-D Piggyback Backshells

- HiPer-D only, not for standard D-Sub connectors
- EMI Banding

Split EMI Banding
289-005
Page A-64

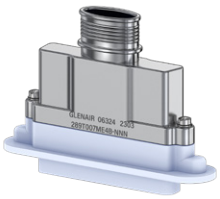

Panel Mount EMI Banding
289-007
Page A-66

60° EMI Banding
289-087
Page A-71

© 2024 Glenair, Inc • 1211 Air Way, Glendale, CA 91201 • 818-247-6000 • www.glenair.com • U.S. CAGE code 06324 • Rectangular Accessories
Dimensions in Inches (millimeters) are subject to change without notice.

289-003, 289-004, 289-019

Protective Cover

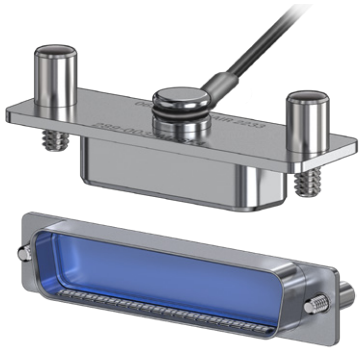

289-003, 289-004, 289-019

This accessory fits D-Subminiature M24308 and Series 28 HiPer-D connectors.

Protective cover fits Glenair Series 28 HiPer-D connectors and MIL-DTL-24308 connectors. Socket connector cover fits over connector shell and has fluorosilicone gasket. Pin connector cover fits inside connector shell. Socket connector cover has optional ground springs for EMI protection. Attach to panel with optional lanyard. Aluminum or stainless steel. Stainless steel screwlocks. Socket cover has nickel-plated copper alloy ground springs and fluorosilicone gasket.

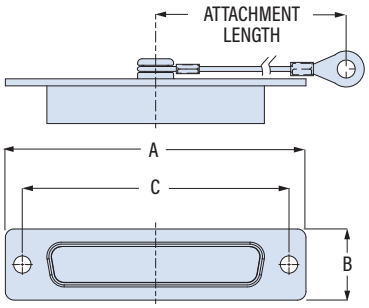

Shell Size	A ± .015 (0.38) in	A mm	B ± .015 (0.38) in	B mm	C in	C mm
1	1.213	30.8	.494	12.6	.984	25.0
2	1.541	39.1	.494	12.6	1.312	33.3
3	2.088	53.0	.494	12.6	1.852	47.0
4	2.729	69.3	.494	12.6	2.500	63.5
5	2.635	66.9	.605	15.4	2.406	61.1
6	2.729	69.3	.668	17.0	2.500	63.5

PART NUMBER

Sample PN → **289-003 ME 3 S F 4 -06**

Base P/N	289-003	Cover, Pin Connector
	289-004	Cover, Socket Connector, with Ground Springs
	289-019	Cover, Socket Connector, No Ground Springs
Shell Size	1 2 3 4 5 6	
Material / Finish	TZ	Tin-Zinc
	MN	MegaNickel
	ME	Aluminum/Electroless Nickel
	NF	Aluminum/Olive Drab Cadmium
	MT	Aluminum/Nickel-PTFE
	ZR	Aluminum/Black Zinc-Nickel
	Z1	SST/Passivated
Screwlocks	N	No Screwlocks (*.120 (3.0) dia. thru-holes*)
	S	Socket Head Male Screwlocks
	P	Female Screwlocks *(fixed, non-rotating)*
Attachment Type	N	No Attachment
	F	Wire Rope, Black Nylon Jacket
	H	Wire Rope, Black FEP Jacket
Attachment Length	*Omit for Attachment Type N*	
	Length in One Inch Increments *(Example: "5" for five inches)*	

Attachment Diameter

Omit for Attachment Type N

Code	Screw Size	Ring ID
Omit	#4	.126 (3.2)
-06	#6	.145 (3.7)
-08	#8	.187 (4.7)
-10	#10	.197 (5.0)

RING ID

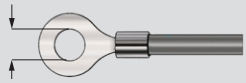

TABLE 1
SCREWLOCK OPTIONS

S

4-40 SST Socket Head Male Screwlocks and Retainers

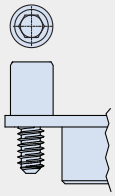

P

4-40 SST Female Screwlocks, Nuts, and Lockwashers

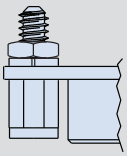

TABLE 2
ATTACHMENT TYPE

F

Wire Rope, Black Nylon Jacket
6/6 nylon over stainless steel rope, .034 (0.9) diameter, good flexibility, good abrasion resistance, -55 to +100 °C

H

Wire Rope, Black FEP Jacket
Black FEP jacket over SST rope, good flexibility, good abrasion resistance, .034" diameter, -65 to +200 °C

© 2024 Glenair, Inc • 1211 Air Way, Glendale, CA 91201 • 818-247-6000 • www.glenair.com • U.S. CAGE code 06324 • Rectangular Accessories
Dimensions in Inches (millimeters) are subject to change without notice.

500-008
Protective Cover, Panel Mount

500-008

This accessory fits D-Subminiature M24308 and Series 28 HiPer-D connectors.

Metal cover for panel-mounted connectors. 500-008 aluminum cover fits M24308 D-Subminiature and Series 28 HiPer-D connectors. Variable height cover completely shrouds connector and seats against panel. Optional EMI panel gasket. Supplied with standard 4 inch (102mm) attachment. Cover has silicone gasket to protect connector face. Cover is supplied with 4-40 male screwlocks to mate with M24308/26 female screwlocks on panel connector. Also available with female screwlocks for use with cable mounted connectors. Aluminum body, passivated SST screwlocks, and silicone gasket.

TABLE 1
SCREWLOCK OPTIONS

No Designator	A	H
Fillister Hd Male	Socket Hd Male	Hex Head Male

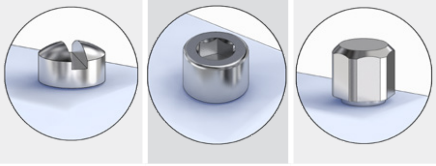

J	K
Female	Slotted Knurled

PART NUMBER

Sample PN➜ **500-008 M 3 R3 A G T 01 -4**

Base P/N — **500-008**

Finish
- **TZ** Tin-Zinc
- **MN** MegaNickel
- **JF** Cadmium, Yel. Chromate
- **M** Electroless Nickel
- **NF** Olive Drab Cadmium
- **MT** Nickel-PTFE
- **ZR** Black Zinc-Nickel

Shell Size — **1 2 3 4 5 6**

Cover Height

Omit for front mounted connector.
Omit for Female Screwlocks (Code J).

Rear Panel Mounted Connector

Code	Panel Thickness	Cover Height
Omit	N/A	.344 (8.7)
R1	.031 (0.8)	.187 (4.8)
R2	.047 (1.2)	.171 (4.3)
R3	.062 (1.6)	.156 (4.0)
R4	.093 (2.4)	.125 (3.2)
R5	.104 (2.6)	.114 (2.9)
R6	.125 (3.2)	.093 (2.4)
R7	.156 (4.0)	.062 (1.6)
R8	.138 (3.5)	.080 (2.0)

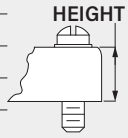

Screwlocks *(Table 1)*
- *Omit* Fillister Head Male Screwlocks
- **A** Socket Head Male Screwlocks
- **H** Hex Head Male Screwlocks
- **J** Female Screwlocks *(fixed, non-rotating)*
- **K** Knurled Slotted Head

EMI Panel Gasket — **G** Gasket Included *Omit if not required*

Protective cover is supplied with standard 4 inch attachment: SST wire rope with blue nylon jacket (Type F) and .182" diameter ring. Use the attachment codes below to modify or delete the attachment.

Attachment Type *(Table 2)*
Omit for standard attachment
L No Attachment
See Table 2 for Attachment Types

Attachment Diameter
Omit for standard attachment. Omit for Attachment Type SK.

Code	Ring Diameter
01	.140 (3.6)
02	.182 (4.6)
04	.197 (5.0)
06	.125 (3.2)

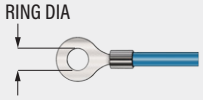

Attachment Length
Omit for standard attachment.
Length in One Inch Increments *(Example: **-5** for five inch length)*

500-008
Protective Cover, Panel Mount

Height Code	Panel Thickness in	Panel Thickness mm	Height in	Height mm
Omit	N/A	N/A	.344	8.7
R1	.031	0.8	.187	4.8
R2	.047	1.2	.171	4.3
R3	.062	1.6	.156	3.4
R4	.093	2.4	.125	3.2
R5	.104	2.6	.114	2.9
R6	.125	3.2	.093	2.4
R7	.156	4.0	.062	1.6
R8	.138	3.4	.080	2.0

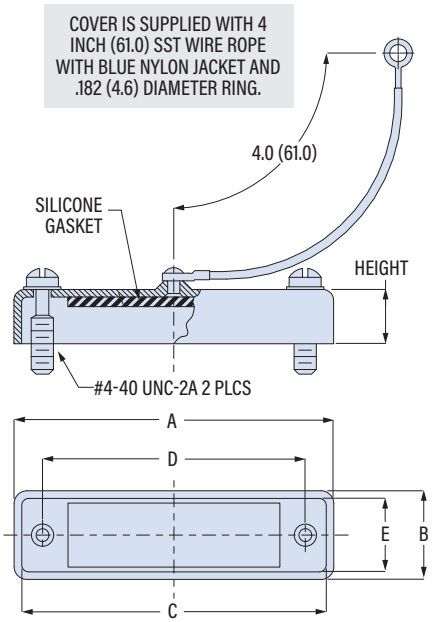

TABLE 2
ATTACHMENT TYPE

D

SST Bead Chain
.125 (3.2) diameter, size 6, -65 to +200 °C

E

Wire Rope, Clear FEP Jacket
Clear FEP jacket over SST rope, fair flexibility, good abrasion resistance, .100" diameter, -65 to +200 °C

F

Wire Rope, Blue Nylon Jacket
6/6 nylon over stainless steel rope, fair flexibility, good abrasion resistance, -55 to +100 °C

G

Black Nylon Rope
Very flexible, good abrasion and fuel resistance, .062 (1.6) diameter, -55 to +100 °C

S

Sash Chain
#8 sash chain, stainless steel.
Length tolerance is ± one link .280 (7.1)

SK

Nylon Rope with Slip Knot
Very flexible, good abrasion and fuel resistance, .094 (2.4) diameter. Length includes .5" (13mm) dia. loop, -55 to +100 °C

T

SST Wire Rope, No Jacket
Good flexibility, good abrasion resistance, .047 (1.2) diameter, passivated, -65 to +200 °C

U

SST Wire Rope, Black Polyurethane
Black polyurethane coating, very flexible, excellent abrasion resistance, .080" (2mm) diameter, -55 to +125 °C

EMI PANEL GASKET

Install gasket on front side of panel. When cover is fastened to panel connector, the front edge of the cover seats onto gasket for aperture-free EMI protection.

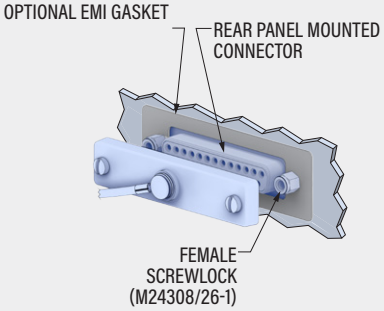

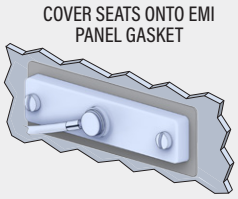

EMI PANEL GASKET
MATL: METLASTIC (ALUMINUM MESH EMBEDDED IN SILICONE) .020 (0.5) THICK

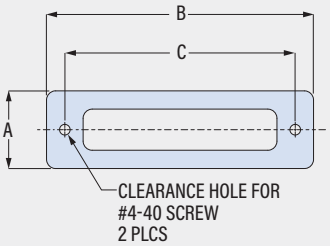

Shell Size	Gasket Part No.	A in	A mm	B in	B mm	C in	C mm
1	559-002-1	.740	18.8	1.500	38.1	.980	24.9
2	559-002-2	.740	18.8	1.810	46.0	1.310	33.3
3	559-002-3	.740	18.8	2.380	60.5	1.850	47.0
4	559-002-4	.740	18.8	3.010	76.5	2.500	63.5
5	559-002-5	.850	21.6	2.920	74.2	2.410	61.2
6	559-002-6	.925	23.5	3.010	76.5	2.500	63.5

Shell Size	A Max in	A Max mm	B Max in	B Max mm	C in	C mm	D ± .005 (0.13) in	D ± .005 (0.13) mm	E in	E mm
1	1.39	35.3	.51	13.0	1.23	31.2	.984	25.0	.41	10.4
2	1.72	43.7	.51	13.0	1.56	39.6	1.312	33.3	.41	10.4
3	2.26	57.4	.51	13.0	2.10	53.3	1.852	47.0	.41	10.4
4	2.90	73.7	.51	13.0	2.74	69.6	2.500	63.5	.41	10.4
5	2.81	71.4	.62	15.7	2.65	67.3	2.406	61.1	.52	13.2
6	2.90	73.7	.68	17.3	2.74	69.6	2.500	63.5	.58	14.7

© 2024 Glenair, Inc • 1211 Air Way, Glendale, CA 91201 • 818-247-6000 • www.glenair.com • U.S. CAGE code 06324 • Rectangular Accessories
Dimensions in Inches (millimeters) are subject to change without notice.

780-518
Protective Cover, Rubber

780-518

This accessory fits D-Subminiature M24308 and Series 28 HiPer-D connectors

Neoprene or silicone. 780-518 rubber cover fits M24308 D-Subminiature and Series 28 HiPer-D connectors. Cover protects connector from damage and contamination. Three material choices: black neoprene, carbon-filled conductive black neoprene, or red silicone. Attach cover with nylon rope. Attachment choices include cable tie, slip knot or stainless steel ring. ***Not rated for water immersion.***

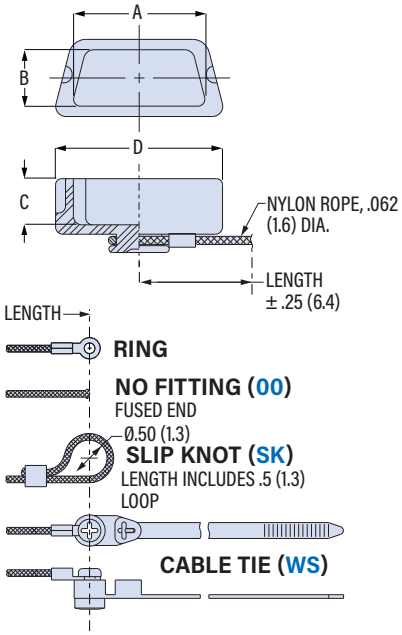

PART NUMBER

Sample PN➜ **780-518 -25S G 4 -06 C**

Base P/N	**780-518**
Size	**-09P -15P -25P -37P -50P -104P** **-09S -15S -25S -37S -50S -104S**
Attachment	***0mit for none*** **G** Nylon Rope
Attachment Length	Length in One Inch Increments *(Example: **4** for four inch lanyard)*
Attachment Fitting	
Material	***0mit*** Black Neoprene **C** Conductive Black Neoprene (10^5 Ω/square min.) **S** Red Silicone

Code	Fitting Type	Ring Dia.
-00	No Fitting	N/A
-04	Ring	.197 (5.0)
-06	Ring	.125 (3.2)
-07	Ring	.218 (5.5)
-09	Ring	.156 (4.0)
-WS	Cable Tie	N/A
-SK	Slip Knot	N/A

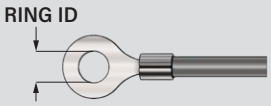

Size	A in	A mm	B in	B mm	C in	C mm	D in	D mm
09S	.61	15.5	.28	7.1	.22	5.6	.82	20.8
09P	.65	16.5	.33	8.4	.23	5.8	.82	20.8
15S	.94	23.9	.28	7.1	.24	6.1	1.26	32.0
15P	.97	24.6	.33	8.4	.24	6.1	1.26	32.0
25S	1.48	37.6	.28	7.1	.25	6.4	1.76	44.7
25P	1.50	38.1	.33	8.4	.25	6.4	1.78	45.2
37S	2.12	53.8	.28	7.1	.23	5.8	2.37	60.2
37P	2.15	54.6	.33	8.4	.23	5.8	2.37	60.2
50S	2.03	51.6	.39	9.9	.24	6.1	2.28	57.9
50P	2.05	52.0	.45	11.4	.23	5.8	2.28	57.9
104S	2.23	56.7	.47	11.9	.25	6.4		61.2
104P	2.26	57.4	.50	12.7	.23	5.8	2.41	61.2

ATTACHMENT FITTING

SK SLIP KNOT

Nylon Rope, Kynar Friction Sleeve

WS CABLE TIE

6/6 nylon cable tie with screw and locknut.
1.77 (45.0) max. wire bundle dia. -40 to +85 °C.

RING TERMINAL

Screw Size	Ring Code	Ring I.D. ±.010 (0.25) in	mm
#4	-06	.125	3.2
#6	-09	.156	4.0
#8	-04	.197	5.0
#10	-07	.218	5.5

289-052

Conductive Dust Cap

289-052

This accessory fits D-Subminiature M24308 connectors and Series 28 HiPer-D connectors.

PART NUMBER

Size	Part No.	A in	A mm	B in	B mm
1P (E-9P)	289-052-1-P	.86	21.8	.51	13.0
1S (E-9S)	289-052-1-S	.79	20.1	.45	11.4
2P (A-15P)	289-052-2-P	1.19	30.2	.51	13.0
2S (A-15S)	289-052-2-S	1.10	27.9	.45	11.4
3P (B-25P)	289-052-3-P	1.70	43.2	.52	13.0
3S (B-25S)	289-052-3-S	1.66	42.2	.46	11.7
4P (C-37P)	289-052-4-P	2.37	60.2	.52	13.0
4S (C-37S)	289-052-4-S	2.29	58.2	.45	11.4
5P (D-50P)	289-052-5-P	2.27	57.7	.62	15.8
5S (D-50S)	289-052-5-S	2.21	56.1	.56	14.2
6P (F-104P)	289-052-6-P	2.40	61.0	.69	17.5
6S (F-104S)	289-052-6-S	2.33	59.2	.63	16.0

Conductive dust caps fit HiPer-D® and M24308-type D-Subminiature connectors. These caps provide electrostatic discharge protection to sensitive equipment. These caps meet the static decay requirement of MIL-PRF-81705E. Surface resistivity is less than 1 x 10^5 ohms/square. Integral lip allows easy removal. Conductive polyethylene copolymer.

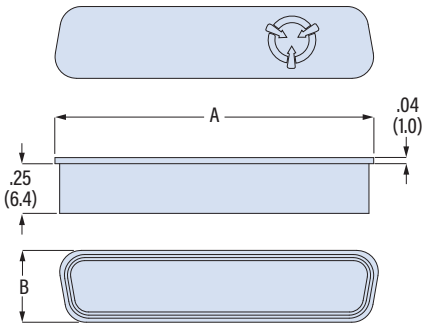

© 2024 Glenair, Inc • 1211 Air Way, Glendale, CA 91201 • 818-247-6000 • www.glenair.com • U.S. CAGE code 06324 • Rectangular Accessories
Dimensions in Inches (millimeters) are subject to change without notice.

557-666
Potting Shell

557-666

This accessory fits D-Subminiature M24308 connectors.
Not compatible with Series 28 HiPer-D

Aluminum potting shell fits M24308-type D-Subminiature connectors. Available in five standard finishes. Fill with potting compound to encapsulate connector terminals and to provide wire strain relief. One piece aluminum shell with passivated stainless steel screwlocks and clips.

Shell Size	A Max in	A Max mm	B in	B mm	C ±.005 (0.13) in	C ±.005 (0.13) mm
1	1.203	30.6	.500	12.7	.984	25.0
2	1.531	38.9	.500	12.7	1.312	33.3
3	2.078	52.8	.500	12.7	1.852	47.0
4	2.718	69.0	.500	12.7	2.500	63.5
5	2.625	66.7	.609	15.5	2.406	61.1

PART NUMBER

Sample PN → **557-666 M 3 A**

Base P/N 557-666

Finish
- **TZ** Tin-Zinc
- **MN** MegaNickel
- **JF** Cadmium, Yel. Chromate
- **M** Electroless Nickel
- **NF** Olive Drab Cadmium
- **MT** Nickel-PTFE
- **ZR** Black Zinc-Nickel

Shell Size 1 2 3 4 5

Screwlocks *(Table 1)*
- ***Omit*** .128 (3.3) diameter thru holes
- **A** Socket Head Male Screwlocks
- **C** Fillister Head Slotted Male Screwlocks

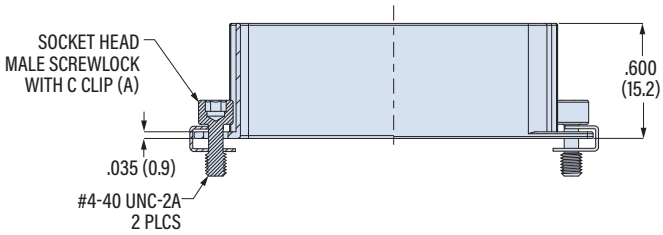

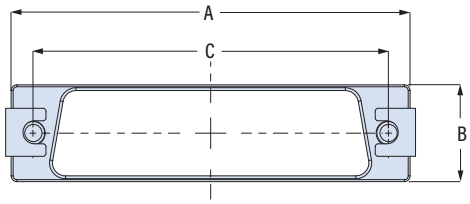

TABLE 1
SCREWLOCK OPTIONS

A

4-40 Socket Head Male Screwlocks with Clips

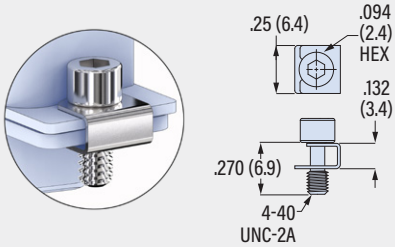

Part Number **687-316M**
Order 2 per backshell

C

4-40 Fillister Head Male Screwlocks with Clips

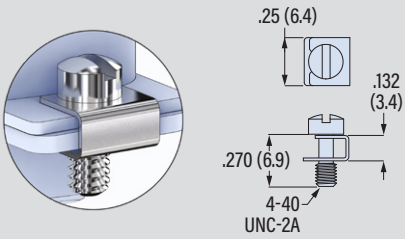

Part Number **687-316**
Order 2 per backshell

289-181
Potting Shell, HiPer-D

289-181

This accessory fits HiPer-D connectors with backshell groove:
280-018P, 280-019S, 280-046P, 280-047S.
Not compatible with standard D-Sub connectors.

HiPer-D Potting Shell. Low profile two piece potting shell fits HiPer-D® connectors with backshell groove (280-018P, 280-019S, 280-046P, 280-047S). Available in five standard finishes. Fill cavity with potting compound to provide wire strain relief. Aluminum with passivated stainless steel screwlocks and clips.

PART NUMBER

Sample PN➜	289-181	2	NF

Base P/N	289-181
Shell Size	1 2 3 4 5 6
Finish	TZ Tin-Zinc MN MegaNickel JF Cadmium, Yel. Chromate M Electroless Nickel NF Olive Drab Cadmium MT Nickel-PTFE ZR Black Zinc-Nickel
Height	*Omit* .75 (19.1) Height 4 1.00 (25.4) Height 6 1.50 (38.1) Height

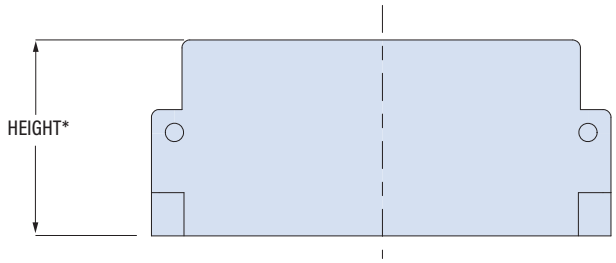

* HEIGHT ACCORDING TO P/N

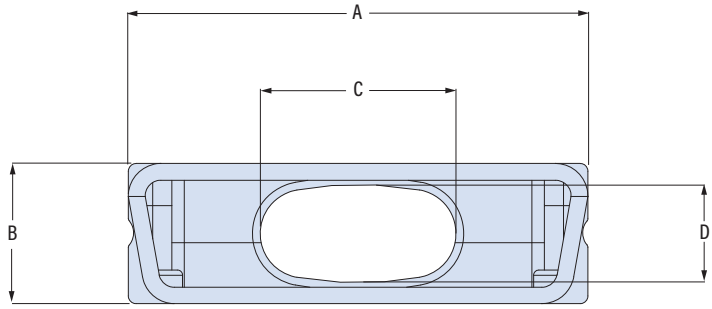

Shell Size	A Max in	A Max mm	B Max in	B Max mm	C in	C mm	D in	D mm
1	.894	22.7	.550	14.0	.65	16.5	.38	9.7
2	1.218	30.9	.550	14.0	.88	22.4	.38	9.7
3	1.760	44.7	.550	14.0	1.50	38.1	.38	9.7
4	2.408	61.2	.550	14.0	2.13	54.1	.38	9.7
5	2.297	58.3	.654	16.6	1.90	48.3	.50	12.7
6	2.422	61.5	.716	18.2	2.13	54.1	.55	14.0

© 2024 Glenair, Inc • 1211 Air Way, Glendale, CA 91201 • 818-247-6000 • www.glenair.com • U.S. CAGE code 06324 • Rectangular Accessories
Dimensions in Inches (millimeters) are subject to change without notice.

550-200
Shorting Cap Backshell, Shrouded

550-200

This accessory fits D-Subminiature M24308 connectors.
Not compatible with Series 28 HiPer-D

Split, shrouded. 550-200 shorting cap fits M24308 D-Subminiature connectors. Two piece backshell has overlapping lip for EMI shielding. Install optional EMI gasket on mating connector panel. Connector is captivated between backshell halves. Eleven shroud lengths to accommodate mating connector mounting dimensions. #4-40 screwlocks are included. Aluminum with stainless steel screws and washers.

TABLE 1
SCREWLOCK OPTIONS

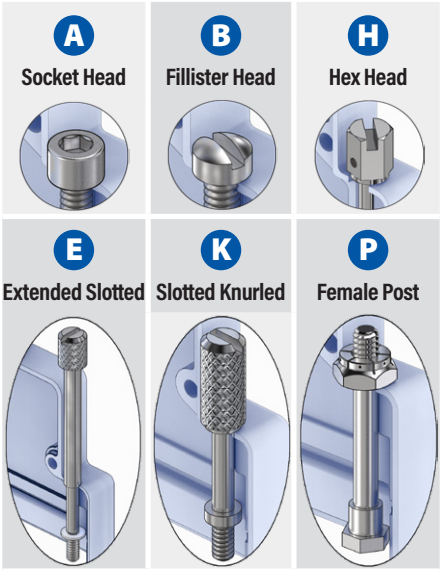

PART NUMBER

Sample PN→	550-200	NF	4	R3	K	0	U	6	-06

Base P/N — 550-200

Finish

TZ	Tin-Zinc
MN	MegaNickel
JF	Cadmium, Yel. Chromate
M	Electroless Nickel
NF	Olive Drab Cadmium
MT	Nickel-PTFE
ZR	Black Zinc-Nickel

Shell Size — 1 2 3 4 5 6

Shroud Length

Mating Connector Rear Panel Mounting

Code	Panel Thickness	E
R1	.031 (0.8)	.247 (6.3)
R2	.047 (1.2)	.231 (5.9)
R3	.062 (1.6)	.216 (5.5)
R4	.093 (2.4)	.185 (4.7)
R5	.104 (2.6)	.174 (4.4)
R6	.125 (3.2)	.153 (3.9)
R7	.156 (4.0)	.125 (3.2)
R8	.135 (3.4)	.140 (3.6)
R9	.188 (4.8)	.094 (2.4)
CC	Cable-to-Cable	.174 (4.4)
F0	Front Panel Mtng.	.343 (8.7)

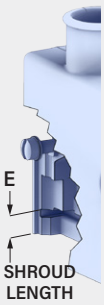

Screwlocks *(Table 1)*

A	Male, Socket Head
B	Male, Fillister Head
E	Male, Extended Slotted
H	Male, Hex Head, Drilled
K	Male, Slotted, Knurled
P	Female Hex Post, Fixed

EMI Panel Gasket

0	No Gasket
1	Gasket Included *(install on mating connector)*

Attachment Type *(Table 2)*
Omit if not required.
See Table 2 for attachment types.

Attachment Length
Omit if not required.
Length in One Inch Increments

Attachment Ring *(Table 3)*
Omit if not required
See Table 3 for attachment ring options.

550-200
Shorting Cap Backshell, Shrouded

TABLE 2
ATTACHMENT TYPE

D — **SST Bead Chain**
.125 (3.2) diameter, size 6, -65 to +200 °C

F — **Wire Rope, Blue Nylon Jacket**
6/6 nylon over stainless steel rope, fair flexibility, good abrasion resistance, -55 to +100 °C

G — **Black Nylon Rope**
Very flexible, good abrasion and fuel resistance, .094 (2.4) diameter, -55 to +100 °C

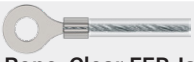

H — **Wire Rope, Clear FEP Jacket**
Clear FEP jacket over SST rope, fair flexibility, good abrasion resistance, .100" diameter, -65 to +200 °C

S — **Sash Chain**
#8 sash chain, stainless steel.
Length tolerance is ± one link .280 (7.1)

T — **SST Wire Rope, No Jacket**
Good flexibility, good abrasion resistance, .047 (1.2) diameter, passivated, -65 to +200 °C

U — **SST Wire Rope, Black Polyurethane**
Black polyurethane coating, very flexible, excellent abrasion resistance, .080" (2mm) diameter, -55 to +125 °C

TABLE 3
ATTACHMENT RING

EYELET

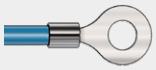

Code	Eyelet I.D.
06	.125 (3.2)
01	.140 (3.6)
02	.182 (4.6)
04	.197 (5.0)

SPLIT RING

Code	Ring I.D.
50	.425 (10.8)
52	.485 (12.3)
54	.640 (16.3)
56	.750 (19.1)
58	.890 (22.6)
60	1.015 (25.8)
64	1.130 (28.7)
68	1.350 (34.3)

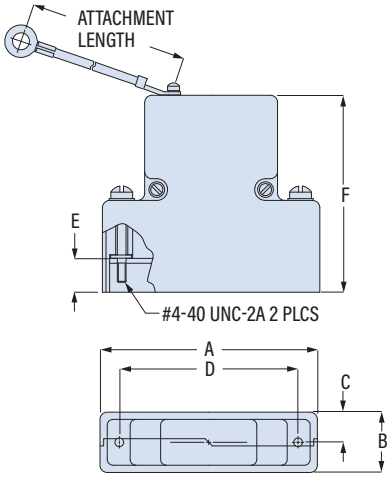

EMI PANEL GASKET

Install gasket on front side of mating connector panel. Gasket is die cut from .020" thick metalastic (aluminum mesh and silicone) material. When backshell is fastened to panel connector, the front edge of the shroud seats onto gasket for aperture-free EMI protection.

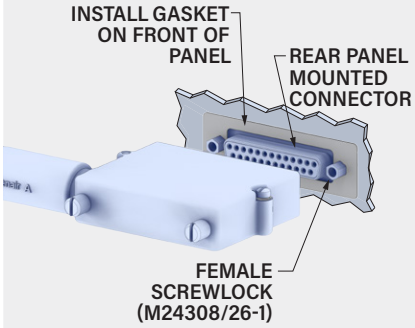

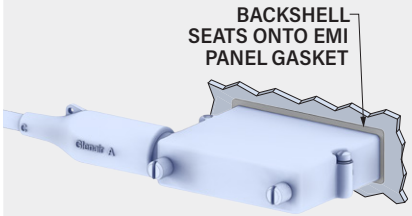

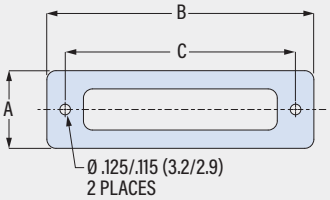

Shell Size	Gasket Part No.	A in	A mm	B in	B mm	C in	C mm
1	559-002-1	.740	18.8	1.500	38.1	.980	24.9
2	559-002-2	.740	18.8	1.810	46.0	1.310	33.3
3	559-002-3	.740	18.8	2.380	60.5	1.850	47.0
4	559-002-4	.740	18.8	3.010	76.5	2.500	63.5
5	559-002-5	.850	21.6	2.920	74.2	2.410	61.2
6	559-002-6	.925	23.5	3.010	76.5	2.500	63.5

Shroud Length	Mating Connector Panel Thickness in	Mating Connector Panel Thickness mm	E Shroud Length in	E Shroud Length mm	F Size 1, 2 in	F Size 1, 2 mm	F Size 3, 4, 5 in	F Size 3, 4, 5 mm	F Size 6 in	F Size 6 mm
CC	N/A	N/A	.174	4.4	1.451	36.9	1.671	42.4	1.820	46.2
F0	N/A	N/A	.343	8.7	1.625	41.3	1.844	46.8	2.000	50.8
R1	.031	0.8	.247	6.3	1.525	38.7	1.745	44.3	1.890	48.0
R2	.047	1.2	.231	5.9	1.509	38.3	1.728	43.9	1.875	47.6
R3	.062	1.6	.216	5.5	1.500	38.1	1.720	43.7	1.860	47.2
R4	.093	2.4	.185	4.7	1.470	37.3	1.690	42.9	1.829	46.5
R5	.104	2.6	.174	4.4	1.451	36.9	1.671	42.4	1.820	46.2
R6	.125	3.2	.153	3.9	1.430	36.3	1.650	41.9	1.798	45.7
R7	.156	4.0	.125	3.2	1.400	35.6	1.620	41.1	1.767	44.9
R8	.135	3.4	.140	3.6	1.417	36.0	1.637	41.6	1.805	45.8
R9	.188	4.8	.094	2.4	1.368	34.7	1.590	40.6	1.740	44.2

Shell Size	A Max in	A Max mm	B Max in	B Max mm	C in	C mm	D ± .005 (0.13) in	D ± .005 (0.13) mm
1	1.393	35.4	.624	15.8	.312	7.9	.984	25.0
2	1.706	43.3	.624	15.8	.312	7.9	1.312	33.3
3	2.265	57.5	.624	15.8	.312	7.9	1.852	47.0
4	2.900	73.7	.624	15.8	.312	7.9	2.500	63.5
5	2.800	71.1	.750	19.1	.375	9.5	2.406	61.1
6	2.900	73.7	.844	21.4	.422	10.7	2.500	63.5

© 2024 Glenair, Inc • 1211 Air Way, Glendale, CA 91201 • 818-247-6000 • www.glenair.com • U.S. CAGE code 06324 • Rectangular Accessories
Dimensions in Inches (millimeters) are subject to change without notice.

557-493
Shorting Cap Backshell, Solid

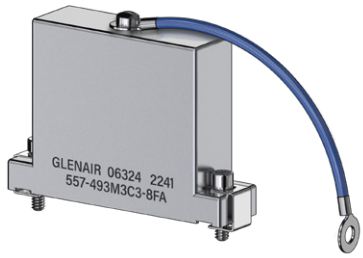

557-493

This accessory fits D-Subminiature M24308 connectors.
Not compatible with Series 28 HiPer-D

Split, shrouded. 557-493 one piece shorting cap backshell fits M24308 D-Subminiature connectors. #4-40 screwlocks are included. Aluminum with stainless steel screws and washers.

TABLE 1 SCREWLOCK OPTIONS

B 4-40 Fillister Hd Male Screwlocks With Clips

C 4-40 Socket Hd Male Screwlocks With Clips

J 4-40 Female Screwlocks

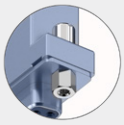

TABLE 2 ATTACHMENT TYPE

D

SST Bead Chain

F

SST Wire Rope, Nylon Jacket

G

Black Nylon Rope

H

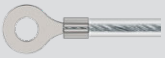

SST Wire Rope, Clear FEP Jacket

S

SST Sash Chain

U

SST Wire Rope, Black Polyurethane Jacket

PART NUMBER

Sample PN➜	557-493	ZR	5	C	1	-8	U	A

Base P/N — **557-493**

Finish
- **TZ** Tin-Zinc
- **MN** MegaNickel
- **JF** Cadmium, Yel. Chromate
- **M** Electroless Nickel
- **NF** Olive Drab Cadmium
- **MT** Nickel-PTFE
- **ZR** Black Zinc-Nickel

Shell Size — **1 2 3 4 5 6**

Screwlocks *(Table 1)*
- **B** Fillister Head Male Screwlocks
- **C** Socket Head Male Screwlocks
- **J** Female Screwlocks

Height Code

Code	D
1	1.00 (25.4)
2	1.25 (31.8)
3	1.50 (38.1)
4	1.75 (44.5)
5	2.00 (50.8)
6	2.50 (63.5)
7	3.00 (76.2)

Attachment Length
- **-N** No Attachment
- Attachment Length in ½ inch increments (*"-10" = five inches*)

Attachment Type *(Table 2)*
Omit if not required.
See Table 2 for attachment types

Attachment Dia.
Omit if not required

Code	E Dia.
A	.140 (3.6)
B	.167 (4.2)
C	.182 (4.6)
D	.191 (4.9)
E	.125 (3.2)
F	.218 (5.5)

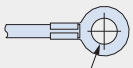

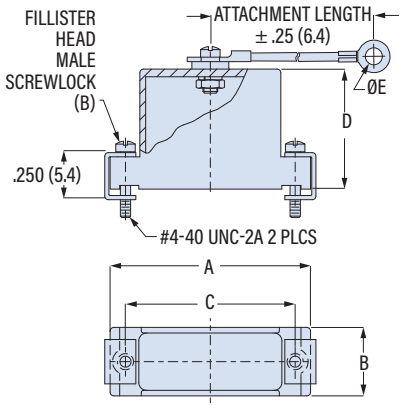

Shell Size	A Max in	A Max mm	B in	B mm	C ± .005 (0.13) in	C ± .005 (0.13) mm
1	1.25	31.8	.53	13.5	.984	25.0
2	1.58	40.1	.53	13.5	1.312	33.3
3	2.13	54.1	.53	13.5	1.852	47.0
4	2.77	70.4	.53	13.5	2.500	63.5
5	2.68	68.1	.66	16.8	2.406	61.1
6	2.77	70.4	.73	18.5	2.500	63.5

© 2024 Glenair, Inc • 1211 Air Way, Glendale, CA 91201 • 818-247-6000 • www.glenair.com • U.S. CAGE code 06324 • Rectangular Accessories
Dimensions in Inches (millimeters) are subject to change without notice.

289-064

Shorting Cap Backshell, HiPer-D

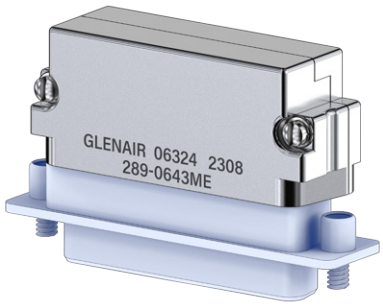

289-064

This accessory fits HiPer-D connectors with backshell groove:
280-018P, 280-019S, 280-046P, 280-047S.
Not compatible with standard D-Sub connectors.

HiPer-D Shorting Cap. Low profile two piece adapter fits HiPer-D® connectors with backshell groove (280-018P, 280-019S, 280-046P, 280-047S). Available in five standard finishes. Optional lanyard for attaching cap. Aluminum with passivated stainless steel screwlocks and clips.

ATTACHMENT TYPE

F **Wire Rope, Black Nylon Jacket**
6/6 nylon over stainless steel rope, fair flexibility, good abrasion resistance, -55 to +100 °C

H **Wire Rope, Black FEP Jacket**
Black FEP jacket over SST rope, fair flexibility, good abrasion resistance, .100" diameter, -65 to +200 °C

Shell Size	A Max in	A Max mm	B Max in	B Max mm
1	.894	22.7	.550	14.0
2	1.218	30.9	.550	14.0
3	1.760	44.7	.550	14.0
4	2.408	61.2	.550	14.0
5	2.297	58.3	.654	16.6
6	2.422	61.5	.716	18.2

PART NUMBER

	Sample PN➜	289-064	3	JF	H	4
Base P/N	289-064					
Shell Size	1 2 3 4 5 6					
Finish	TZ Tin-Zinc MN MegaNickel JF Cadmium, Yel. Chromate M Electroless Nickel NF Olive Drab Cadmium MT Nickel-PTFE ZR Black Zinc-Nickel					
Attachment Type	*Omit* No Attachment F Wire Rope, Black Nylon Jacket H Wire Rope, Black FEP Jacket					
Attachment Length	*Omit* No Attachment Length in One Inch Increments *(Example: "5" for five inch length)*					

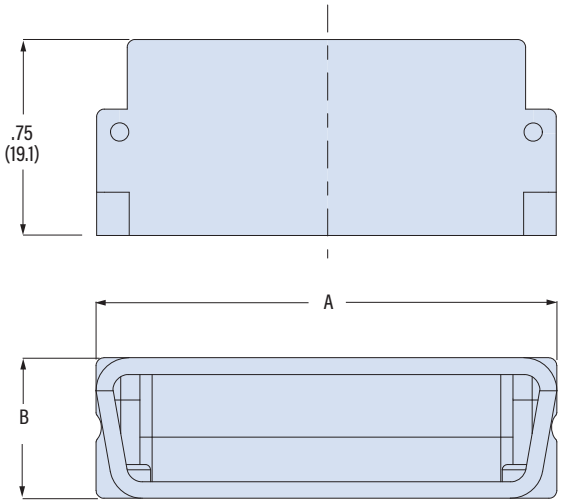

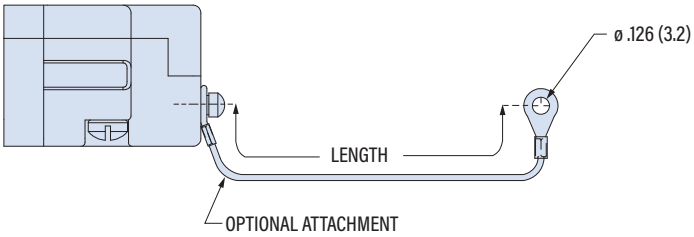

© 2024 Glenair, Inc • 1211 Air Way, Glendale, CA 91201 • 818-247-6000 • www.glenair.com • U.S. CAGE code 06324 • Rectangular Accessories
Dimensions in Inches (millimeters) are subject to change without notice.

289-015, 289-016, 559-001
Female Screwlock, Panel Mounting

289-015 FEMALE SCREWLOCK KIT, FRONT OR REAR MOUNTING, .50 (12.7) OAL

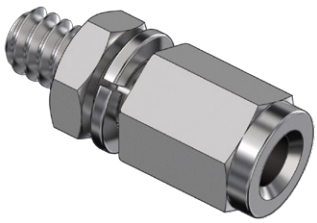

Attach D-Subminiature connectors to panel with 289-015 female screwlock kit. Kit contains (2) posts, (2) lockwashers and (2) nuts. 300 Series stainless steel.
Order (1) kit per connector.

PART NUMBER

Panel Thickness in	Panel Thickness mm	Part No.	A in	A mm
(None)	(None)	289-015-A	.250	6.4
.031	0.8	289-015-B	.219	5.6
.047	1.2	289-015-C	.203	5.2
.062	1.6	289-015-D	.188	4.8

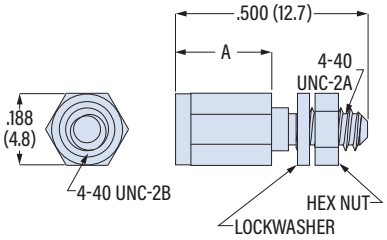

289-016 FEMALE SCREWLOCK, HIPER-D, .40 (10.2) OAL

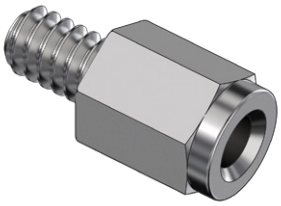

Attach connector to panel with shortened 289-016 female screwlock. For use with HiPer-D connectors with tapped 4-40 mounting holes. Install with threadlocking compound. Kit contains (2) posts. 300 Series stainless steel, passivated.
Order (1) kit per connector.

PART NUMBER

Panel Thickness in	Panel Thickness mm	Part No.	A in	A mm
(None)	(None)	289-016-A	.250	6.4
.031	0.8	289-016-B	.219	5.6
.047	1.2	289-016-C	.203	5.2
.062	1.6	289-016-D	.188	4.8

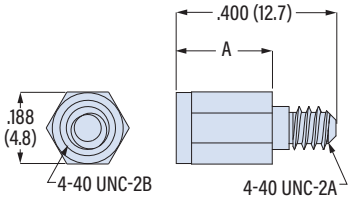

559-001 FEMALE SCREWLOCK KIT, REAR MOUNTING

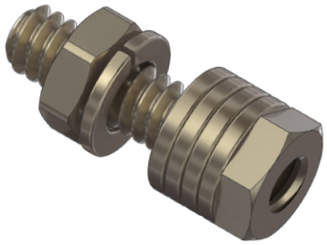

For rear panel mounting. Attach D-Subminiature connectors to panel with 559-001 female screwlock kit. Kit contains (2) posts, (8) flat washers, (2) lockwashers and (2) nuts. 300 Series stainless steel.
Order (1) kit per connector.

PART NUMBER

Material/ Finish	Part No.
Steel/ Yellow Chromate over Cadmium	559-001
Stainless Steel/ Passivated	559-001-49

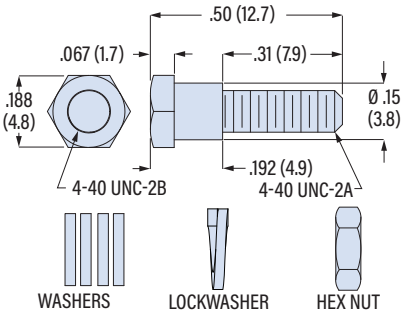

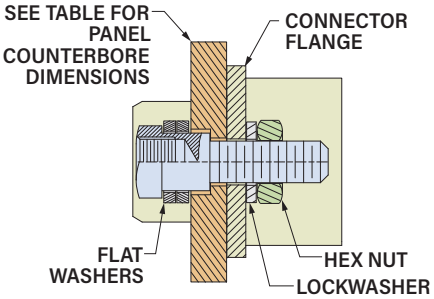

PANEL COUNTERBORE

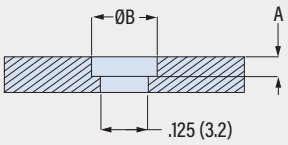

Panel Thickness in	Panel Thickness mm	A in	A mm	ø B in	ø B mm	No. of Washers
.031	0.8	— No Counterbore —				4
.047	1.2	— No Counterbore —				4
.062	1.6	.020	0.51	.171	4.3	3
.093	2.4	.051	1.30	.171	4.3	2
.104	2.6	.062	1.6	.171	4.3	1
.125	3.2	.083	2.1	.171	4.3	1
.156	4.0	.114	2.9	.171	4.3	2
.140	3.5	.098	2.5	.171	4.3	2
.188	4.8	.146	3.7	.219	5.6	2

© 2024 Glenair, Inc • 1211 Air Way, Glendale, CA 91201 • 818-247-6000 • www.glenair.com • U.S. CAGE code 06324 • Rectangular Accessories
Dimensions in Inches (millimeters) are subject to change without notice.

289-062
Jackscrew, HiPer-D

- For Connector without Backshell
- Fits Series 28 HiPer-D and M24308
- Includes Retention Clip

289-062 JACKSCREW FOR HIPER-D CONNECTOR WITHOUT BACKSHELL

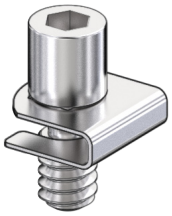

Socket Head Jackscrew

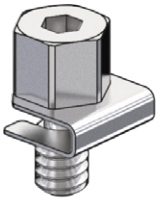

Hex Head Jackscrew

Slot Head Jackscrew

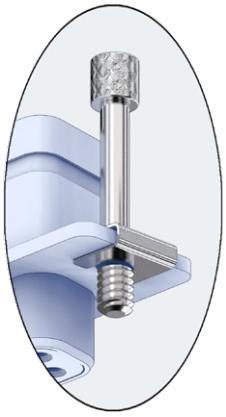

Long Jackscrew

Jackscrew fits Series 28 HiPer-D and M24308 D-Subminiature connectors. Available in two lengths and three styles: socket head, hex head and knurled slot head. For connector without backshell. Kit includes (2) jackscrews and (2) clips. 300 Series stainless steel. ***Order (1) kit per connector.***

PART NUMBER

Length	Head Style	Part No.
Short 1	Socket Head	289-062Z1S1
	Hex Head	289-062Z1H1
	Knurled Slot Hd.	289-062Z1F1
Long 2	Socket Head	289-062Z1S2
	Hex Head	289-062Z1H2
	Knurled Slot Hd.	289-062Z1F2

HEX HEAD

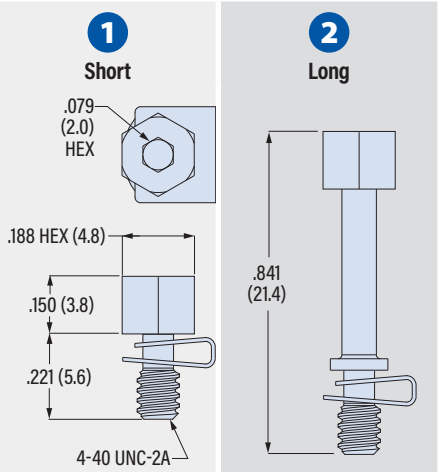

P/N 289-062Z1H1 — *Order 1 per connector*

P/N 289-062Z1H2 — *Order 1 per connector**

SOCKET HEAD

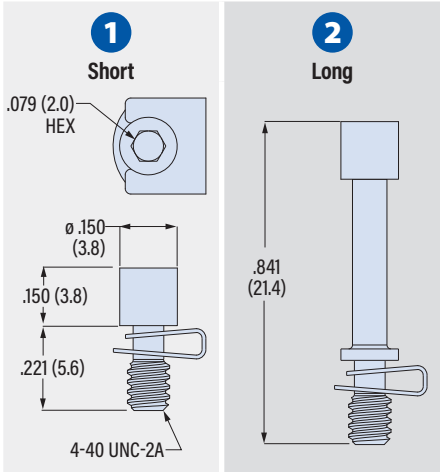

P/N 289-062Z1S1 — *Order 1 per connector*

P/N 289-062Z1S2 — *Order 1 per connector**

RETENTION CLIP

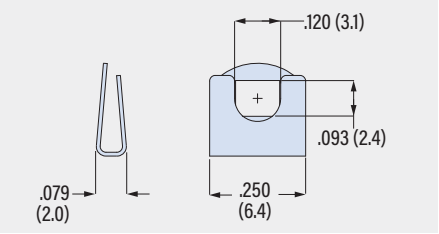

** the '2' length Long jackscrew does not work with backshells 289T005, 289S005, 289T008, and 289S008. Order '1' length Short jackscrew for these backshells.*

KNURLED SLOT HEAD

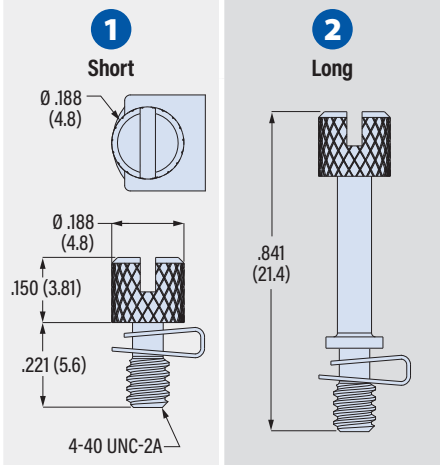

P/N 289-062Z1F1 — *Order 1 per connector*

P/N 289-062Z1F2 — *Order 1 per connector**

© 2024 Glenair, Inc • 1211 Air Way, Glendale, CA 91201 • 818-247-6000 • www.glenair.com • U.S. CAGE code 06324 • Rectangular Accessories
Dimensions in Inches (millimeters) are subject to change without notice.

687-092, 687-345

Replacement Screwlocks for Type 1 Shrouded Backshells

687-092A SOCKET HEAD MALE SCREWLOCK FOR TYPE 1 BACKSHELLS

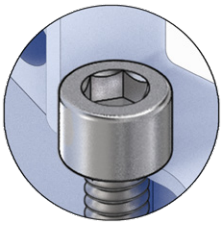

Replacement male screwlock for Type 1 split shrouded Series 550 backshells. 300 Series stainless steel. Includes nylon washer.

- *Order (2) per backshell*
- *Fits Top Entry and Side Entry backshells*

PART NUMBER
687-092A

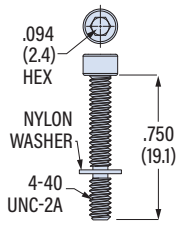

687-092B FILLISTER HEAD MALE SCREWLOCK FOR TYPE 1 BACKSHELLS

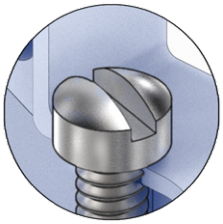

Replacement male screwlock for Type 1 split shrouded Series 550 backshells. 300 Series stainless steel. Includes nylon washer.

- *Order (2) per backshell*
- *Fits Top Entry and Side Entry backshells*

PART NUMBER
687-092B

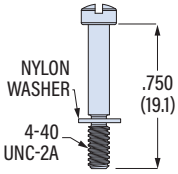

687-092E EXTENDED KNURLED SLOT HEAD MALE SCREWLOCK FOR TYPE 1 BACKSHELLS

Replacement male screwlock for Type 1 split shrouded Series 550 backshells. 300 Series stainless steel. Includes nylon washer.

- *Order (2) per backshell*
- *Fits Top Entry and Side Entry backshells*

PART NUMBER			
		A	
Shell Size	Part No.	in	mm
1	687-092E1	1.03	26.2
2	687-092E2	1.03	26.2
3-6	687-092E	1.53	38.9

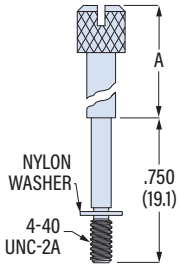

687-092H HEX HEAD SLOTTED DRILLED MALE SCREWLOCK FOR TYPE 1 BACKSHELLS

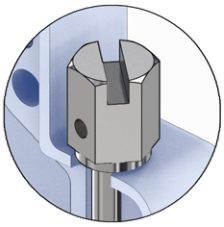

Replacement male screwlock for Type 1 split shrouded Series 550 backshells. 300 Series stainless steel. Hex head is cross-drilled for safety wire.

- *Order (2) per backshell*
- *Fits Top Entry and Side Entry backshells*

PART NUMBER
687-092H

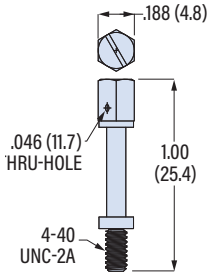

687-092, 687-345

Replacement Screwlocks for Type 1 Shrouded Backshells

687-092K KNURLED SLOTTED MALE SCREWLOCK FOR TYPE 1 BACKSHELLS

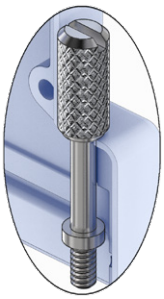

Replacement male screwlock for Type 1 split shrouded Series 550 backshells. 300 Series stainless steel. Head is cross-drilled for safety wire.

- *Order (2) per backshell*
- *Fits Top Entry and Side Entry backshells*

PART NUMBER
687-092K

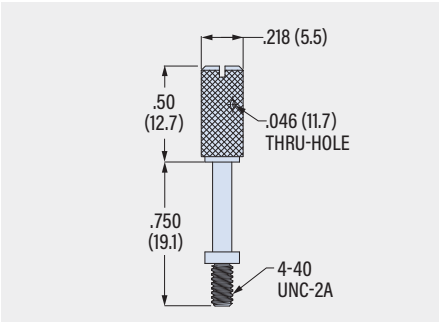

687-092P FEMALE SCREWLOCK FOR TYPE 1 BACKSHELLS

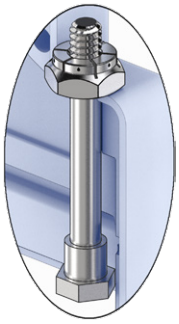

Replacement female screwlock for Type 1 split shrouded Series 550 backshells. 300 Series stainless steel. Fixed, non-rotating.

- *Order (2) per backshell*
- *Fits Top Entry and Side Entry backshells*

PART NUMBER
687-092P

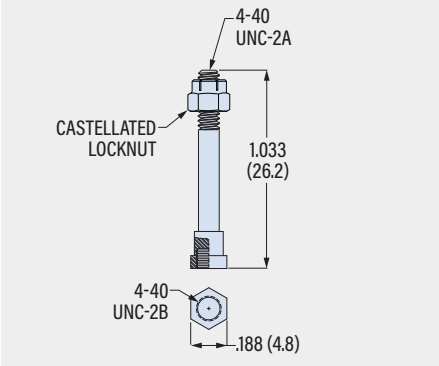

687-345 MALE SCREWLOCK FOR TYPE 1 END ENTRY BACKSHELLS

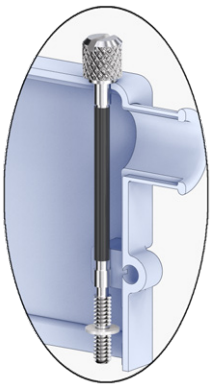

Replacement male screwlock for End Entry Type 1 split shrouded Series 550 backshells. 300 Series stainless steel. Hex head or knurled slot head. Includes nylon washer and heatshrink tube.

- *Order (2) per backshell*
- *Fits End Entry backshells*

PART NUMBER

Head Style	Shell Size	Part No.	A in	A mm
Slot	1-2	687-345-03	1.87	47.5
	3-6	687-345-04	2.16	54.9
Hex	1-2	687-345-03H	1.87	47.5
	3-6	687-345-04H	2.16	54.9

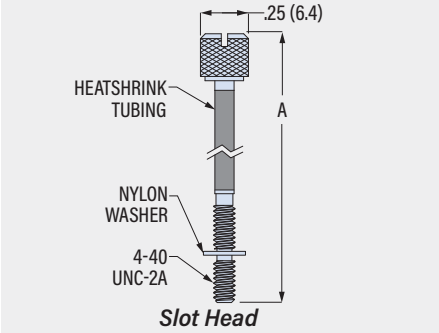

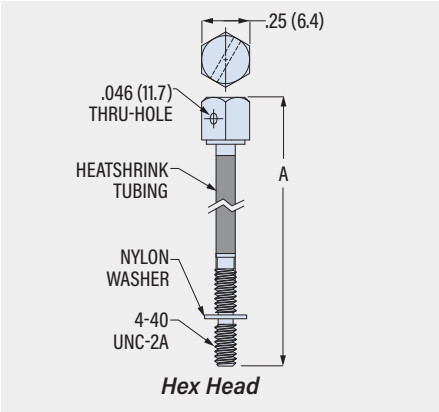

© 2024 Glenair, Inc • 1211 Air Way, Glendale, CA 91201 • 818-247-6000 • www.glenair.com • U.S. CAGE code 06324 • Rectangular Accessories
Dimensions in Inches (millimeters) are subject to change without notice.

687-172, 687-236

Replacement Screwlocks for Type 2 Solid Backshells (.25" Flange)

687-172 SOCKET HEAD MALE JACKSCREW WITH "E" RING

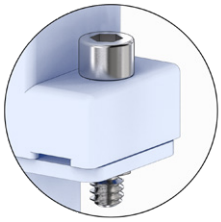

Replacement socket head male jackscrew for Type 2 solid Series 557 backshells with .25 (6.4) flange. Included "E" ring retains connector and screw to backshell. 300 Series stainless steel.

- *Order (2) per backshell*
- *Fits Type 2 solid backshells with .25 (6.4) flange*

PART NUMBER
687-172

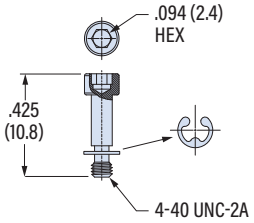

687-236, 687-236S SOCKET HEAD MALE SCREWLOCK WITH CLIP

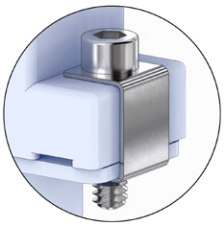

Replacement socket head male screwlock for Type 2 solid Series 557 backshells with .25 (6.4) flange. Available with safety wire hole. Includes clip. 300 Series stainless steel.

- *Order (2) per backshell*
- *Fits Type 2 solid backshells with .25 (6.4) flange*

PART NUMBER	
Socket Head	687-236
Socket Head w/ Safety Wire Hole	687-236S

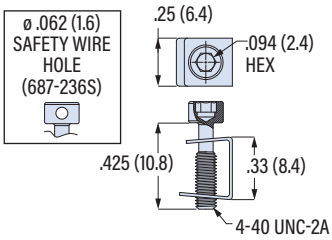

687-236B SLOTTED FILLISTER HEAD MALE SCREWLOCK WITH CLIP

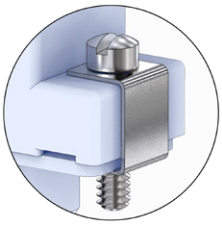

Replacement fillister head male screwlock for Type 2 solid Series 557 backshells with .25 (6.4) flange. Includes clip. 300 Series stainless steel.

- *Order (2) per backshell*
- *Fits Type 2 solid backshells with .25 (6.4) flange*

PART NUMBER
687-236B

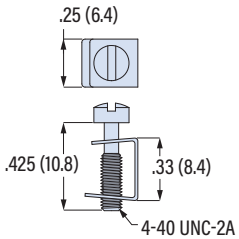

687-236H HEX HEAD MALE SCREWLOCK WITH CLIP

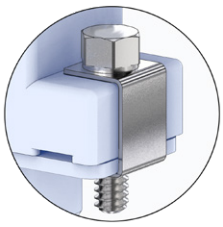

Replacement hex head male screwlock for Type 2 solid Series 557 backshells with .25 (6.4) flange. Includes clip. 300 Series stainless steel.

- *Order (2) per backshell*
- *Fits Type 2 solid backshells with .25 (6.4) flange*

PART NUMBER
687-236H

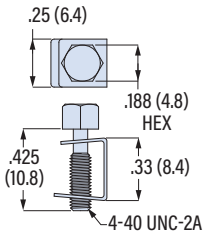

© 2024 Glenair, Inc • 1211 Air Way, Glendale, CA 91201 • 818-247-6000 • www.glenair.com • U.S. CAGE code 06324 • Rectangular Accessories
Dimensions in Inches (millimeters) are subject to change without notice.

687-236X, 687-418, 687-626

Replacement Screwlocks for Type 2 Solid Backshells (.25" Flange)

687-236X CROSS RECESS HEAD MALE SCREWLOCK WITH CLIP

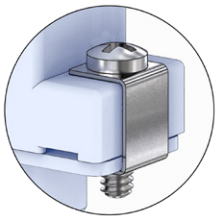

Replacement cross recess head male screwlock for Type 2 solid Series 557 backshells with .25 (6.4) flange. 300 Series stainless steel.

- *Order (2) screws per backshell*
- *Fits Type 2 solid backshells with .25 (6.4) flange*

PART NUMBER
687-236X

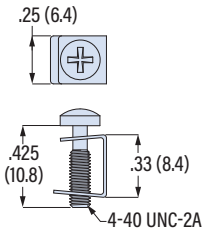

687-418 FEMALE SCREWLOCK

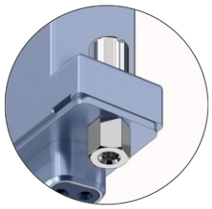

Replacement female screwlock for Type 2 solid Series 557 backshells with .25 (6.4) flange. Includes slotted nut and lockwasher.

- *Order (2) screws per backshell*
- *Fits Type 2 solid backshells with .25 (6.4) flange*

PART NUMBER
687-418F

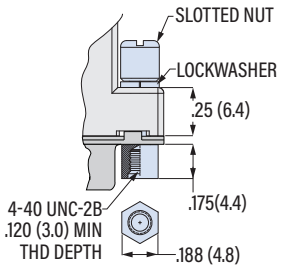

687-626 EXTENDED SLOT HEAD MALE SCREWLOCK WITH CLIP

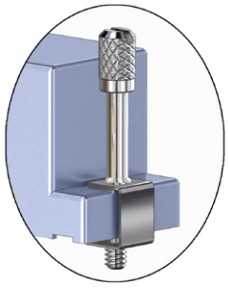

Replacement socket head male screwlock for Type 2 solid Series 557 backshells with .25 (6.4) flange. 300 Series stainless steel.

- *Order (2) per backshell*
- *Fits Type 2 solid backshells with .25 (6.4) flange*
- *Not for End Entry backshells*

PART NUMBER

Shell Size	Part No.	Length in	Length mm
1-2	687-626-1E	.75	19.1
3-6	687-626-2E	1.00	25.4

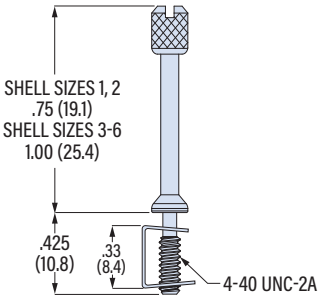

© 2024 Glenair, Inc • 1211 Air Way, Glendale, CA 91201 • 818-247-6000 • www.glenair.com • U.S. CAGE code 06324 • Rectangular Accessories
Dimensions in Inches (millimeters) are subject to change without notice.

687-316
Replacement Screwlocks for Type 3 Solid Backshells (.035" Flange)

687-316 FILLISTER HEAD MALE SCREWLOCK WITH CLIP

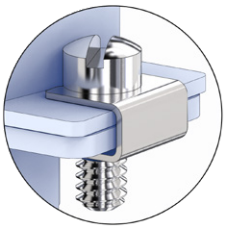

Replacement slotted fillister head male screwlock for Type 3 solid Series 557 ultra-lightweight backshells with .035 (0.9) flange. 300 Series stainless steel. Includes clip.

- *Order (2) per backshell*
- *Fits Type 3 solid backshells with .035 (0.9) flange*

PART NUMBER
687-316

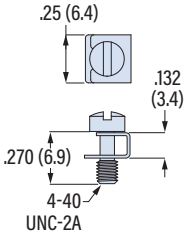

687-316M SOCKET HEAD MALE SCREWLOCK WITH CLIP

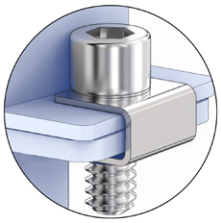

Replacement socket head male screwlock for Type 3 solid Series 557 ultra-lightweight backshells with .035 (0.9) flange. 300 Series stainless steel. Includes clip.

- *Order (2) per backshell*
- *Fits Type 3 solid backshells with .035 (0.9) flange*

PART NUMBER
687-316M

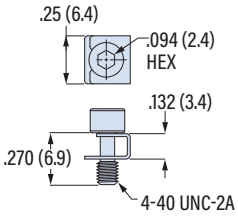

687-316H HEX HEAD MALE SCREWLOCK

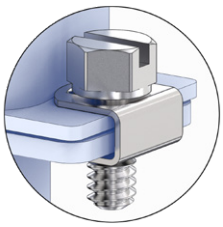

Replacement slotted hex head male screwlock for Type 3 solid Series 557 ultra-lightweight backshells with .035 (0.9) flange. 300 Series stainless steel. Includes clip.

- *Order (2) per backshell*
- *Fits Type 3 solid backshells with .035 (0.9) flange*

PART NUMBER
687-316H

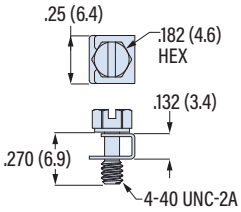

687-316E1 EXTENDED LENGTH SLOTTED MALE SCREWLOCK WITH CLIP

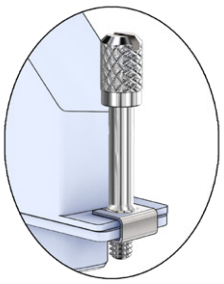

Replacement slotted fillister head male screwlock for Type 3 solid Series 557 ultra-lightweight backshells with .035 (0.9) flange. 300 Series stainless steel. Includes clip.

- *Order (2) per backshell*
- *Fits Type 3 solid backshells with .035 (0.9) flange*

PART NUMBER
687-316E1

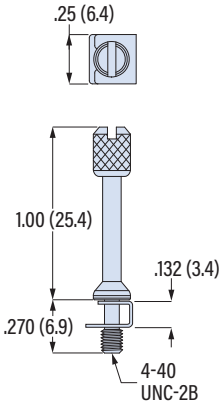

© 2024 Glenair, Inc • 1211 Air Way, Glendale, CA 91201 • 818-247-6000 • www.glenair.com • U.S. CAGE code 06324 • Rectangular Accessories
Dimensions in Inches (millimeters) are subject to change without notice.

559-002
EMI Panel Gasket

559-002 EMI PANEL GASKET FOR TYPE 1 SHROUDED BACKSHELLS

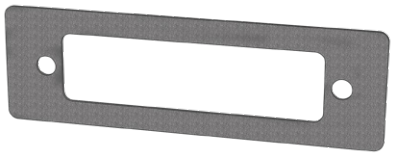

Gasket attaches to panel-mounted D-Subminiature connector. Use with shrouded Type 1 backshell. Backshell shroud seats onto gasket for EMI protection. Woven aluminum wire embedded in silicone.

- *For Series 550 Type 1 split backshells*

PART NUMBER

Shell Size	Gasket Part No.	A in	A mm	B in	B mm	C in	C mm
1	559-002-01	.740	18.8	1.500	38.1	.980	24.9
2	559-002-02	.740	18.8	1.810	46.0	1.312	33.3
3	559-002-03	.740	18.8	2.380	60.5	1.852	47.0
4	559-002-04	.740	18.8	3.010	76.5	2.500	63.5
5	559-002-05	.850	21.6	2.920	74.2	2.406	61.1
6	559-002-06	.925	23.5	3.010	76.4	2.500	63.5

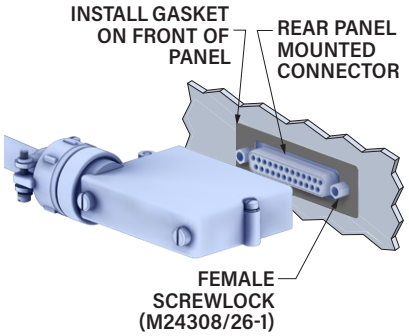

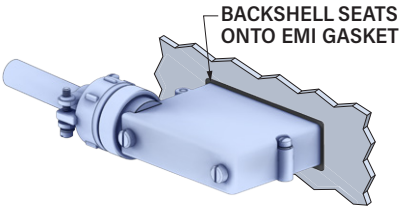

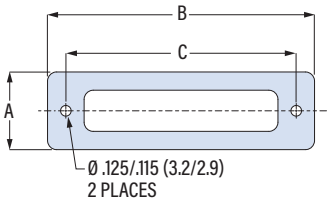

Install gasket onto panel with M24308/26 female screwlocks. When backshell is fastened to panel connector, the front edge of the shroud seats onto gasket for aperture-free EMI protection.

© 2024 Glenair, Inc • 1211 Air Way, Glendale, CA 91201 • 818-247-6000 • www.glenair.com • U.S. CAGE code 06324 • Rectangular Accessories
Dimensions in Inches (millimeters) are subject to change without notice.

500-024, 500-068

Dummy Stowage Plugs and Receptacles

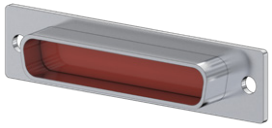

500-024
Dummy Plug for Stowing D-Sub Pin (Receptacle) Connectors

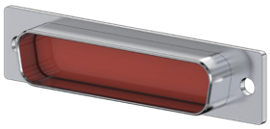

500-068
Dummy Receptacle for Stowing D-Sub Socket (Plug) Connectors

Use dummy stowage accessory to secure and protect unused D-Subminiature connectors. Aluminum with silicone rubber gasket.

PART NUMBER

Sample PN➜ **500-024 M 4**

Base P/N	**500-024**	Dummy Stowage Plug
	500-068	Dummy Stowage Receptacle
Finish	**TZ**	Tin-Zinc
	MN	MegaNickel
	JF	Cadmium, Yel. Chromate
	M	Electroless Nickel
	NF	Olive Drab Cadmium
	MT	Nickel-PTFE
	ZR	Black Zinc-Nickel
Shell Size	**1 2 3 4 5 6**	

500-024 DUMMY STOWAGE PLUG

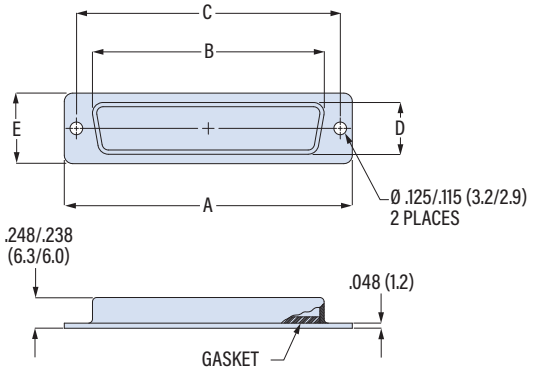

Shell Size	A in	A mm	B Max in	B Max mm	C ±.005 (0.13) in	C ±.005 (0.13) mm	D Max in	D Max mm	E in	E mm
1	1.213	30.8	.648	16.5	.984	25.0	.316	8.0	.494	12.5
2	1.541	39.1	.976	24.8	1.312	33.3	.316	8.0	.494	12.5
3	2.088	53.0	1.516	38.5	1.852	47.0	.316	8.0	.494	12.5
4	2.729	69.3	2.164	55.0	2.500	63.5	.316	8.0	.494	12.5
5	2.635	66.9	2.069	52.6	2.406	61.1	.428	10.9	.605	15.4
6	2.729	69.3	2.194	55.7	2.500	63.5	.490	12.4	.668	17.0

500-068 DUMMY STOWAGE RECEPTACLE

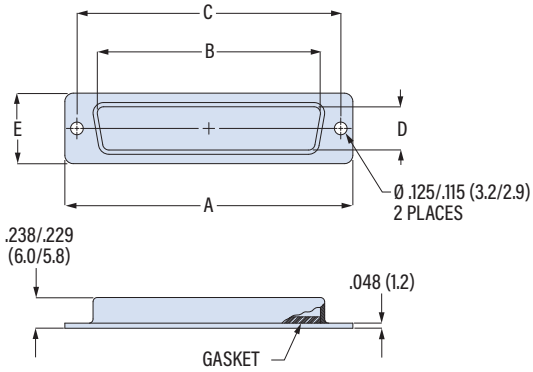

Shell Size	A in	A mm	B Max in	B Max mm	C ±.005 (0.13) in	C ±.005 (0.13) mm	D Max in	D Max mm	E in	E mm
1	1.213	30.8	.661	16.8	.984	25.0	.324	8.2	.494	12.5
2	1.541	39.1	.989	25.1	1.312	33.3	.324	8.2	.494	12.5
3	2.088	53.0	1.529	38.8	1.852	47.0	.324	8.2	.494	12.5
4	2.729	69.3	2.177	55.3	2.500	63.5	.324	8.2	.494	12.5
5	2.635	66.9	2.074	52.7	2.406	61.1	.436	11.1	.605	15.4
6	2.729	69.3	2.207	56.1	2.500	63.5	.498	12.6	.668	17.0

550-004
Shrouded Backshell, EMI

- Split EMI Backshell
- Cone-and-Ring Shield Termination
- Saddle Clamp Strain Relief

T Top Entry

S Side Entry

E End Entry

CONE-AND-RING

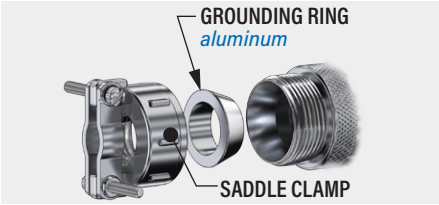

550-004

This accessory fits D-Subminiature M24308 connectors.
Not compatible with Series 28 HiPer-D

Split, Cone-and-Ring shield termination. 550-004 diecast aluminum backshell fits M24308 D-Subminiature connectors. EMI protected with ground ring for terminating cable shield. Backshell fully shrouds the connector. Eleven shroud lengths. Choose shroud length based on mating connector mounting style. Optional EMI panel gasket installs onto mating connector. When mated, the backshell shroud seats onto the gasket for low-resistance grounding and EMI protection.

TABLE 1
SCREWLOCK OPTIONS

A Socket Head

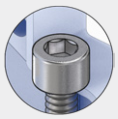

B Fillister Head

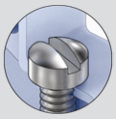

H Hex Head

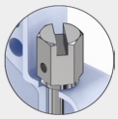

E Extended Slotted

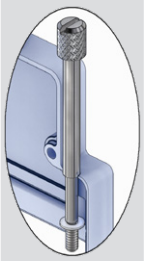

J K Slotted Knurled

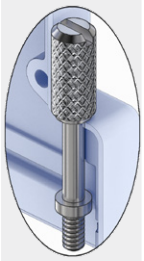

P Female Post

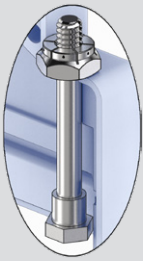

PART NUMBER

Sample PN➜ 550T004 M 3 R3 A 0 F 04

Base P/N

550T004	T	Top Entry
550E004	E	End Entry
550S004	S	Side Entry

Finish

TZ	Tin-Zinc
MN	MegaNickel
JF	Cadmium, Yel. Chromate
M	Electroless Nickel
NF	Olive Drab Cadmium
MT	Nickel-PTFE
ZR	Black Zinc-Nickel

Shell Size

1 2 3 4 5 6

Shroud Length

Mating Connector Rear Panel Mounting

Code	Panel Thickness	E
R1	.031 (0.8)	.247 (6.3)
R2	.047 (1.2)	.231 (5.9)
R3	.062 (1.6)	.216 (5.5)
R4	.093 (2.4)	.185 (4.7)
R5	.104 (2.6)	.174 (4.4)
R6	.125 (3.2)	.153 (3.9)
R7	.156 (4.0)	.125 (3.2)
R8	.135 (3.4)	.140 (3.6)
R9	.188 (4.8)	.094 (2.4)
CC	Cable-to-Cable	.174 (4.4)
F0	Front Panel Mount	.343 (8.7)

Screwlocks *(Table 1)*

Code	Type	Profiles
A	Male, Socket Head	S T
B	Male, Fillister Head	S T
E	Male, Extended Slotted	S T
H	Male, Hex Head, Drilled	S T
J	Male, Slotted, Knurled	E
K	Male, Slotted, Knurled	S T
P	Female Hex Post, Fixed	S T

EMI Panel Gasket

0	No Gasket
1	Gasket Included *(install on mating connector)*

Strain Relief

F Saddle Clamp

Entry Size

Entry Size	Cable Range Min	Cable Range Max	Shell Size
02	.125 (3.2)	.250 (6.4)	1-6
03	.250 (6.4)	.375 (9.5)	1-6
04	.312 (7.9)	.500 (12.7)	1-6
05	.437 (11.1)	.625 (15.9)	1-6
06	.562 (14.3)	.750 (19.1)	1-6
07	.687 (17.4)	.875 (22.2)	6
08	.812 (20.6)	1.000 (25.4)	6

© 2024 Glenair, Inc • 1211 Air Way, Glendale, CA 91201 • 818-247-6000 • www.glenair.com • U.S. CAGE code 06324 • Rectangular Accessories
Dimensions in Inches (millimeters) are subject to change without notice.

550-004
Shrouded Backshell, EMI

- Split EMI Backshell
- Cone-and-Ring Shield Termination
- Saddle Clamp Strain Relief

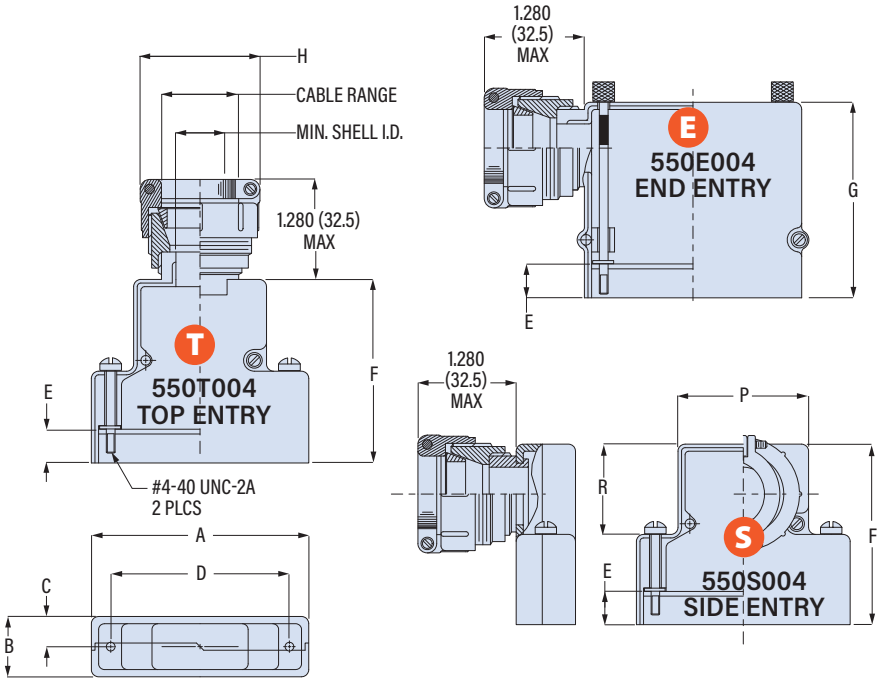

Shell Size	A Max in	A Max mm	B Max in	B Max mm	C in	C mm	D ± .005 (0.13) in	D ± .005 (0.13) mm	P in	P mm	R in	R mm	Max Entry Size
1	1.393	35.4	.624	15.8	.312	7.9	.984	25.0	.730	18.5	.719	18.3	06
2	1.706	43.3	.624	15.8	.312	7.9	1.312	33.3	1.050	26.7	.719	18.3	06
3	2.265	57.5	.624	15.8	.312	7.9	1.852	47.0	1.594	40.5	.938	23.8	06
4	2.900	73.7	.624	15.8	.312	7.9	2.500	63.5	2.240	56.9	.938	23.8	06
5	2.800	71.1	.750	19.1	.375	9.5	2.406	61.1	2.140	54.4	.938	23.8	06
6	2.900	73.7	.844	21.4	.422	10.7	2.500	63.5	2.240	56.9	1.094	27.8	08

Shroud Length	Mating Connector Panel Thickness in	Mating Connector Panel Thickness mm	E Shroud Length in	E Shroud Length mm	F ± .031 (0.8) Size 1, 2 in	F Size 1, 2 mm	F Size 3, 4, 5 in	F Size 3, 4, 5 mm	F Size 6 in	F Size 6 mm	G ± .031 (0.8) Size 1, 2 in	G Size 1, 2 mm	G Size 3-6 in	G Size 3-6 mm
CC	N/A	N/A	.174	4.4	1.451	36.9	1.671	42.4	1.820	46.2	1.583	40.2	1.831	46.7
F0	N/A	N/A	.343	8.7	1.625	41.3	1.844	46.8	2.000	50.8	1.750	44.5	2.000	50.8
R1	.031	0.8	.247	6.3	1.525	38.7	1.745	44.3	1.890	48.0	1.656	42.1	1.904	48.4
R2	.047	1.2	.231	5.9	1.509	38.3	1.728	43.9	1.875	47.6	1.640	41.7	1.888	48.0
R3	.062	1.6	.216	5.5	1.500	38.1	1.720	43.7	1.860	47.2	1.625	41.3	1.873	47.6
R4	.093	2.4	.185	4.7	1.470	37.3	1.690	42.9	1.829	46.5	1.594	40.5	1.842	46.8
R5	.104	2.6	.174	4.4	1.451	36.9	1.671	42.4	1.820	46.2	1.583	40.2	1.831	46.5
R6	.125	3.2	.153	3.9	1.430	36.3	1.650	41.9	1.798	45.7	1.563	39.7	1.811	46.0
R7	.156	4.0	.125	3.2	1.400	35.6	1.620	41.1	1.767	44.9	1.531	38.9	1.781	45.2
R8	.135	3.4	.140	3.6	1.417	36.0	1.637	41.6	1.805	45.8	1.550	39.4	1.798	45.7
R9	.188	4.8	.094	2.4	1.368	34.7	1.590	40.6	1.740	44.2	1.500	38.1	1.750	44.5

Entry Size	H Max in	H Max mm	Cable Range Min in	Cable Range Min mm	Cable Range Max in	Cable Range Max mm
02	.968	24.6	.125	3.2	.250	6.4
03	1.046	26.6	.250	6.4	.375	9.5
04	1.156	29.4	.312	7.9	.500	12.7
05	1.218	30.9	.437	11.1	.625	15.9
06	1.343	34.1	.562	14.3	.750	19.1
07	1.468	37.3	.687	17.4	.875	22.2
08	1.593	40.5	.812	20.6	1.000	25.4

Shell Size	Shell I.D. Min. Top Entry in	Top Entry mm	End Entry in	End Entry mm
1	.250	6.4	.375	9.5
2	.375	9.5	.375	9.5
3	.475	12.1	.475	12.1
4	.475	12.1	.475	12.1
5	.575	14.6	.575	14.6
6	1.000	25.4	1.000	25.4

EMI PANEL GASKET

Install gasket on front side of mating connector panel. When backshell is fastened to panel connector, the front edge of the shroud seats onto gasket for aperture-free EMI protection.

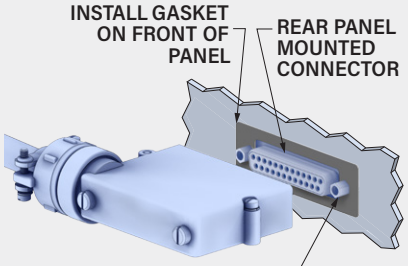

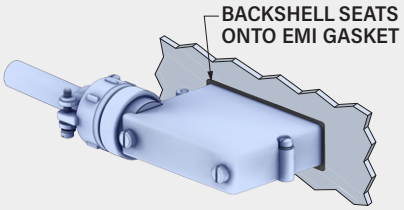

EMI PANEL GASKET
.020 (0.5) THICK
MATL: ALUMINUM MESH EMBEDDED IN SILICONE

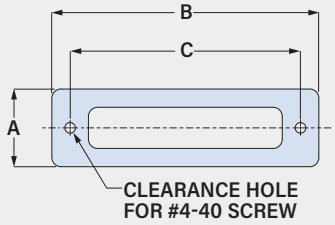

Shell Size	Gasket Part No.	A in	A mm	B in	B mm	C in	C mm
1	559-002-1	.740	18.8	1.500	38.1	.980	24.9
2	559-002-2	.740	18.8	1.810	46.0	1.312	33.3
3	559-002-3	.740	18.8	2.380	60.5	1.852	47.0
4	559-002-4	.740	18.8	3.010	76.5	2.500	63.5
5	559-002-5	.850	21.6	2.920	74.2	2.406	61.1
6	559-002-6	.925	23.5	3.010	76.4	2.500	63.5

© 2024 Glenair, Inc • 1211 Air Way, Glendale, CA 91201 • 818-247-6000 • www.glenair.com • U.S. CAGE code 06324 • Rectangular Accessories
Dimensions in Inches (millimeters) are subject to change without notice.

550-005

Shrouded Backshell, Braid Trap

- Split EMI Backshell
- Braid Trap Shield Termination
- Saddle Clamp Strain Relief

550-005

This accessory fits D-Subminiature M24308 connectors.
Not compatible with Series 28 HiPer-D

Braid trap shield termination. 550-005 diecast aluminum backshell fits M24308 D-Subminiature connectors. EMI protected. Tapered candelabra thread captivates shield braid. Backshell has groove for heatshrink boot (P/N *770-001*). Backshell fully shrouds the connector. Eleven shroud lengths. Choose shroud length based on mating connector mounting style. Optional metalastic EMI panel gasket installs onto mating connector. When fully mated, the backshell shroud seats onto the gasket for low-resistance grounding and EMI protection. Aluminum alloy, stainless steel hardware.

TABLE 1 SCREWLOCK OPTIONS

A	B	H
Socket Head	Fillister Head	Hex Head
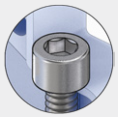	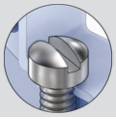	
E	**J K**	**P**
Extended Slotted	Slotted Knurled	Female Post
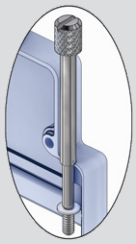	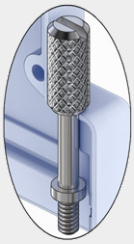	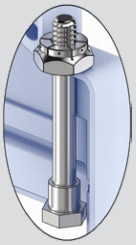

PART NUMBER

Sample PN → 550T005 M 3 R3 A 0 F 04

Base P/N

550T005	T	Top Entry
550E005	E	End Entry
550S005	S	Side Entry

Finish

TZ	Tin-Zinc
MN	MegaNickel
JF	Cadmium, Yel. Chromate
M	Electroless Nickel
NF	Olive Drab Cadmium
MT	Nickel-PTFE
ZR	Black Zinc-Nickel

Shell Size

1 2 3 4 5 6

Shroud Length

Mating Connector Rear Panel Mounting

Code	Panel Thickness	E
R1	.031 (0.8)	.247 (6.3)
R2	.047 (1.2)	.231 (5.9)
R3	.062 (1.6)	.216 (5.5)
R4	.093 (2.4)	.185 (4.7)
R5	.104 (2.6)	.174 (4.4)
R6	.125 (3.2)	.153 (3.9)
R7	.156 (4.0)	.125 (3.2)
R8	.135 (3.4)	.140 (3.6)
R9	.188 (4.8)	.094 (2.4)
CC	Cable-to-Cable	.174 (4.4)
F0	Front Panel Mount	.343 (8.7)

Screwlocks *(Table 1)*

Code	Type	Profiles
A	Male, Socket Head	S T
B	Male, Fillister Head	S T
E	Male, Extended Slotted	S T
H	Male, Hex Head, Drilled	S T
J	Male, Slotted, Knurled	E
K	Male, Slotted, Knurled	S T
P	Female Hex Post, Fixed	S T

EMI Panel Gasket

0	No Gasket
1	Gasket Included *(install on mating connector)*

Strain Relief

F	Saddle Clamp
G	Gland Nut

Entry Size

Entry Size	Cable Range Min	Cable Range Max	Shell Size
02	.125 (3.2)	.250 (6.4)	1-6
03	.250 (6.4)	.375 (9.5)	1-6
04	.312 (7.9)	.500 (12.7)	1-6
05	.437 (11.1)	.625 (15.9)	1-6
06	.562 (14.3)	.750 (19.1)	1-6
07	.687 (17.4)	.875 (22.2)	6
08	.812 (20.6)	1.000 (25.4)	6

© 2024 Glenair, Inc • 1211 Air Way, Glendale, CA 91201 • 818-247-6000 • www.glenair.com • U.S. CAGE code 06324 • Rectangular Accessories
Dimensions in Inches (millimeters) are subject to change without notice.

550-005

Shrouded Backshell, Braid Trap

- Split EMI Backshell
- Braid Trap Shield Termination
- Saddle Clamp Strain Relief

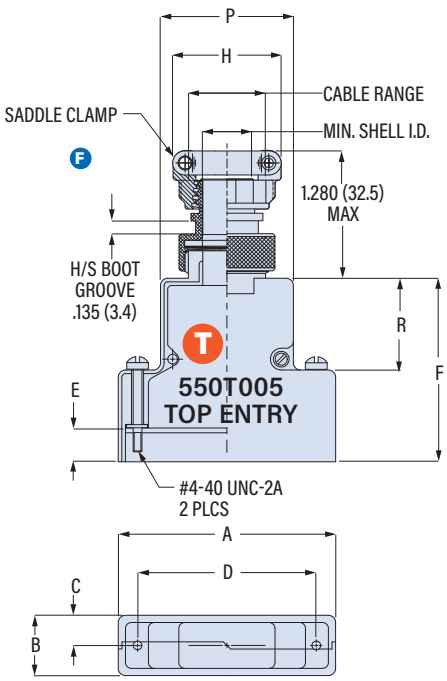

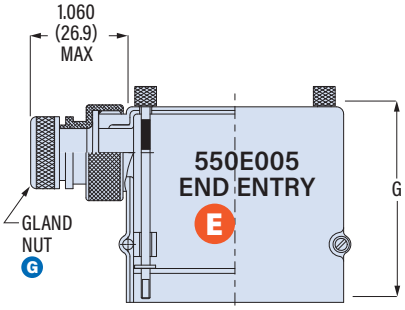

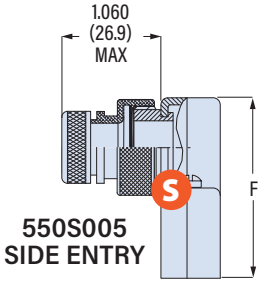

Shell Size	A Max in	A Max mm	B Max in	B Max mm	C in	C mm	D ± .005 (0.13) in	D ± .005 (0.13) mm	P in	P mm	R in	R mm	Max Entry Size
1	1.393	35.4	.624	15.8	.312	7.9	.984	25.0	.730	18.5	.719	18.3	06
2	1.706	43.3	.624	15.8	.312	7.9	1.312	33.3	1.050	26.7	.719	18.3	06
3	2.265	57.5	.624	15.8	.312	7.9	1.852	47.0	1.594	40.5	.938	23.8	06
4	2.900	73.7	.624	15.8	.312	7.9	2.500	63.5	2.240	56.9	.938	23.8	06
5	2.800	71.1	.750	19.1	.375	9.5	2.406	61.1	2.140	54.4	.938	23.8	06
6	2.900	73.7	.844	21.4	.422	10.7	2.500	63.5	2.240	56.9	1.094	27.8	08

Shroud Length	Mating Connector Panel Thickness in	Mating Connector Panel Thickness mm	E Shroud Length in	E Shroud Length mm	F ± .031 (0.8) Size 1, 2 in	F Size 1, 2 mm	F Size 3, 4, 5 in	F Size 3, 4, 5 mm	F Size 6 in	F Size 6 mm	G ± .031 (0.8) Size 1, 2 in	G Size 1, 2 mm	G Size 3-6 in	G Size 3-6 mm
CC	N/A	N/A	.174	4.4	1.451	36.9	1.671	42.4	1.820	46.2	1.583	40.2	1.831	46.5
F0	N/A	N/A	.343	8.7	1.625	41.3	1.844	46.8	2.000	50.8	1.750	44.5	2.000	50.8
R1	.031	0.8	.247	6.3	1.525	38.7	1.745	44.3	1.890	48.0	1.656	42.1	1.904	48.4
R2	.047	1.2	.231	5.9	1.509	38.3	1.728	43.9	1.875	47.6	1.640	41.7	1.888	48.0
R3	.062	1.6	.216	5.5	1.500	38.1	1.720	43.7	1.860	47.2	1.625	41.3	1.873	47.6
R4	.093	2.4	.185	4.7	1.470	37.3	1.690	42.9	1.829	46.5	1.594	40.5	1.842	46.8
R5	.104	2.6	.174	4.4	1.451	36.9	1.671	42.4	1.820	46.2	1.583	40.2	1.831	46.5
R6	.125	3.2	.153	3.9	1.430	36.3	1.650	41.9	1.798	45.7	1.563	39.7	1.811	46.0
R7	.156	4.0	.125	3.2	1.400	35.6	1.620	41.1	1.767	44.9	1.531	38.9	1.781	45.2
R8	.135	3.4	.140	3.6	1.417	36.0	1.637	41.6	1.805	45.8	1.550	39.4	1.798	45.7
R9	.188	4.8	.094	2.4	1.368	34.7	1.590	40.4	1.740	44.2	1.500	38.1	1.750	44.5

Entry Size	H Max in	H Max mm	Cable Range Min in	Cable Range Min mm	Cable Range Max in	Cable Range Max mm
02	.968	24.6	.125	3.2	.250	6.4
03	1.046	26.6	.250	6.4	.375	9.5
04	1.156	29.4	.312	7.9	.500	12.7
05	1.218	30.9	.437	11.1	.625	15.9
06	1.343	34.1	.562	14.3	.750	19.1
07	1.468	37.3	.687	17.4	.875	22.2
08	1.593	40.5	.812	20.6	1.000	25.4

Shell Size	Shell I.D. Min. Top Entry in	Top Entry mm	End Entry in	End Entry mm
1	.250	6.4	.375	9.5
2	.375	9.5	.375	9.5
3	.475	12.1	.475	12.1
4	.475	12.1	.475	12.1
5	.575	14.6	.575	14.6
6	1.000	25.4		

BRAID TRAP

EMI PANEL GASKET

Install gasket on front side of mating connector panel. When backshell is fastened to panel connector, the front edge of the shroud seats onto gasket for aperture-free EMI protection.

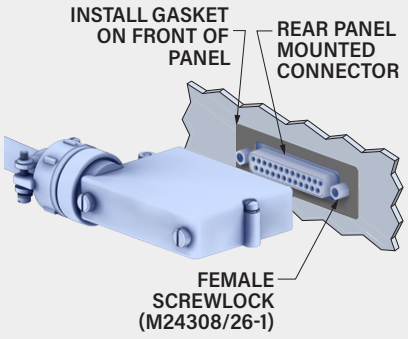

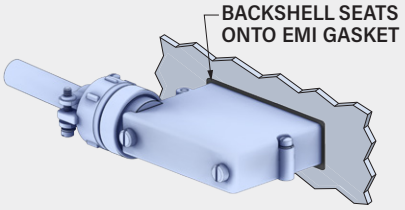

EMI PANEL GASKET
.020 (0.5) THICK
MATL: ALUMINUM
MESH EMBEDDED IN
SILICONE

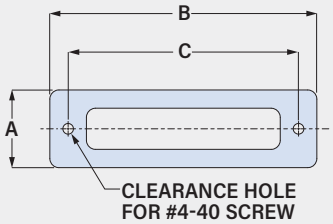

Shell Size	Gasket Part No.	A in	A mm	B in	B mm	C in	C mm
1	559-002-1	.740	18.8	1.500	38.1	.980	24.9
2	559-002-2	.740	18.8	1.810	46.0	1.312	33.3
3	559-002-3	.740	18.8	2.380	60.5	1.852	47.0
4	559-002-4	.740	18.8	3.010	76.5	2.500	63.5
5	559-002-5	.850	21.6	2.920	74.2	2.406	61.1
6	559-002-6	.925	23.5	3.010	76.4	2.500	63.5

© 2024 Glenair, Inc • 1211 Air Way, Glendale, CA 91201 • 818-247-6000 • www.glenair.com • U.S. CAGE code 06324 • Rectangular Accessories
Dimensions in Inches (millimeters) are subject to change without notice.

550-009

Shrouded Backshell, Rear Panel Mount

- Rear Panel Mount
- Cone-and-Ring Shield Termination
- Saddle Clamp Strain Relief

T Top Entry

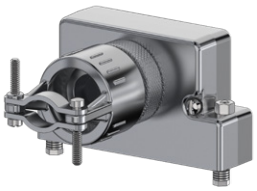

S Side Entry

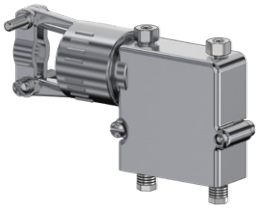

E End Entry

REAR PANEL MOUNTING

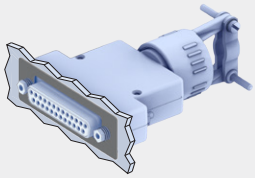

FOR REAR-MOUNTED CONNECTORS ONLY
BACKSHELL ATTACHES TO INSIDE OF PANEL WITH FEMALE SCREWLOCKS (INCLUDED).

550-009

This accessory fits D-Subminiature M24308 connectors.
Not compatible with Series 28 HiPer-D

For rear panel mounted connectors, Cone-and-Ring shield termination. 550-009 diecast aluminum backshell fits rear panel mounted M24308 D-Subminiature connectors. EMI protected. Cable shield attaches to backshell with ground ring. For panel thicknesses up to 3⁄16 inch (4.8mm). Optional metalastic EMI panel gasket. Connector fits into groove between backshell halves. #4-40 female screwlocks are included. Aluminum with stainless steel screws and washers.

CONE-AND-RING SHIELD TERMINATION

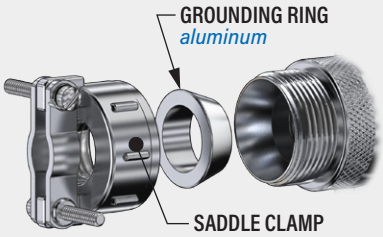

Fold braid over grounding ring. Tighten clamp onto backshell to captivate braid.

PART NUMBER

Sample PN➜ **550T009 M 3 R3 L 0**

Base P/N

Base Part No.	Profile
550T009	T Top Entry
550E009	E End Entry
550S009	S Side Entry

Finish

TZ	Tin-Zinc
MN	MegaNickel
JF	Cadmium, Yel. Chromate
M	Electroless Nickel
NF	Olive Drab Cadmium
MT	Nickel-PTFE
ZR	Black Zinc-Nickel

Shell Size

1 2 3 4 5 6

Panel Thickness

Code	Panel Thickness
R1	.031 (0.8)
R2	.047 (1.2)
R3	.062 (1.6)
R4	.093 (2.4)
R5	.104 (2.6)
R6	.125 (3.2)
R7	.156 (4.0)
R8	.135 (3.4)
R9	.188 (4.8)

Strain Relief

F	Saddle Clamp
G	Gland Nut

EMI Gasket

0	No Gasket
1	Gasket Included *(install on mating connector)*

© 2024 Glenair, Inc • 1211 Air Way, Glendale, CA 91201 • 818-247-6000 • www.glenair.com • U.S. CAGE code 06324 • Rectangular Accessories
Dimensions in Inches (millimeters) are subject to change without notice.

550-009

Shrouded Backshell, Rear Panel Mount

- Rear Panel Mount
- Cone-and-Ring Shield Termination
- Saddle Clamp Strain Relief

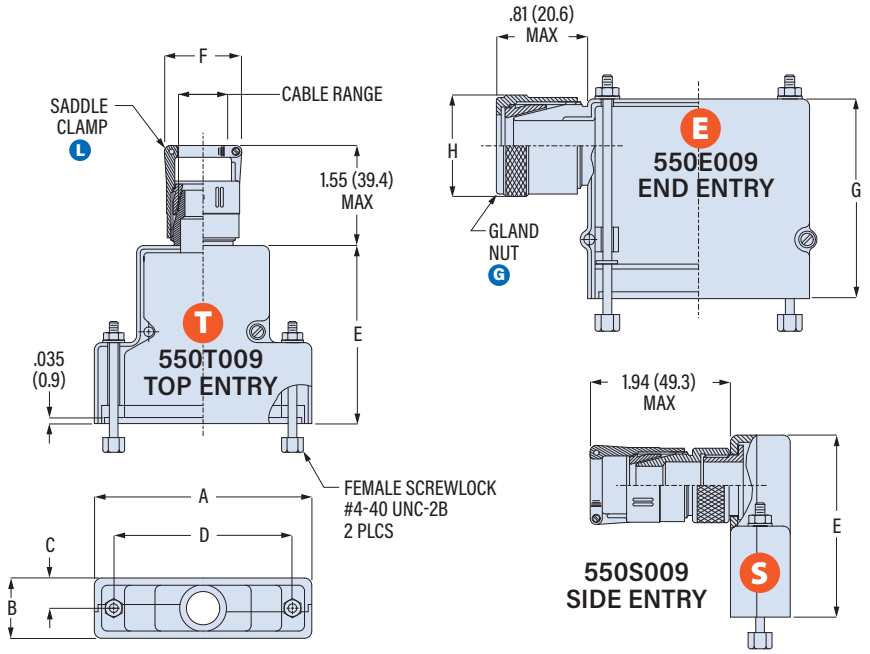

Shell Size	A Max in	A Max mm	B Max in	B Max mm	C in	C mm	D ±.005 (0.13) in	D ±.005 (0.13) mm	E in	E mm	F Max in	F Max mm	G in	G mm	H Max in	H Max mm
1	1.393	35.4	.624	15.8	.312	7.9	.984	25.0	1.320	33.5	1.046	26.6	1.460	37.1	.843	21.4
2	1.706	43.3	.624	15.8	.312	7.9	1.312	33.3	1.320	33.5	1.046	26.6	1.460	37.1	.843	21.4
3	2.265	57.5	.624	15.8	.312	7.9	1.852	47.0	1.540	39.1	1.156	29.4	1.710	43.4	.968	24.6
4	2.900	73.7	.624	15.8	.312	7.9	2.500	63.5	1.540	39.1	1.156	29.4	1.710	43.4	.968	24.6
5	2.800	71.1	.750	19.1	.375	9.5	2.406	61.1	1.540	39.1	1.218	30.9	1.710	43.4	1.109	28.2
6	2.900	73.7	.844	21.4	.422	10.7	2.500	63.5	1.690	42.9	1.594	40.5	1.710	43.4	1.468	37.3

Shell Size	Cable Range: Profile S, T Min in	Profile S, T Min mm	Profile S, T Max in	Profile S, T Max mm	Profile E Min in	Profile E Min mm	Profile E Max in	Profile E Max mm
1	.125	3.2	.250	6.4	.250	6.4	.375	9.5
2	.250	6.4	.375	9.5	.250	6.4	.375	9.5
3	.312	7.9	.475	12.1	.312	7.9	.475	12.1
4	.312	7.9	.475	12.1	.312	7.9	.475	12.1
5	.437	11.1	.575	14.6	.437	11.1	.575	14.6
6	.812	20.6	1.000	25.4	.812	20.6	1.000	25.4

EMI PANEL GASKET

Install gasket on front side of panel. When the mating backshell is fastened to the panel connector, the front edge of the backshell seats onto the gasket for aperture-free EMI protection.

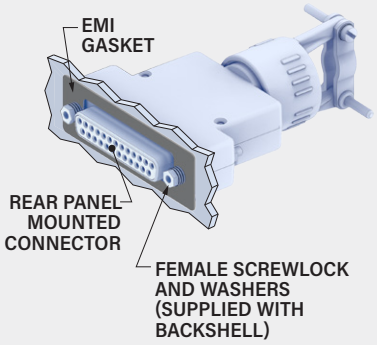

EMI PANEL GASKET
.020 (0.5) THICK
MATL: ALUMINUM MESH EMBEDDED IN SILICONE

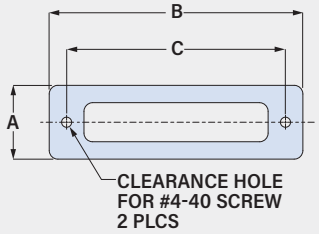

Shell Size	Gasket Part No.	A in	A mm	B in	B mm	C in	C mm
1	559-002-1	.740	18.8	1.500	38.1	.980	24.9
2	559-002-2	.740	18.8	1.810	46.0	1.312	33.3
3	559-002-3	.740	18.8	2.380	60.5	1.852	47.0
4	559-002-4	.740	18.8	3.010	76.5	2.500	63.5
5	559-002-5	.850	21.6	2.920	74.2	2.406	61.1
6	559-002-6	.925	23.5	3.010	76.4	2.500	63.5

PANEL COUNTERBORE DIMENSIONS

Panel Thk. Code	Panel Thickness in	Panel Thickness mm	A Counterbore Depth in	A Counterbore Depth mm	ø B Counterbore Diameter in	ø B Counterbore Diameter mm	No. of Washers
R1	.031	0.8	.000	0.00	.000	0.00	4
R2	.047	1.2	.000	0.00	.000	0.00	4
R3	.062	1.6	.020	0.51	.199	5.05	3
R4	.093	2.4	.051	1.30	.199	5.05	2
R5	.104	2.6	.061	1.55	.199	5.05	1
R6	.125	3.2	.082	2.08	.199	5.05	1
R7	.156	4.0	.097	2.46	.199	5.05	2
R8	.135	3.4	.098	2.49	.199	5.05	2
R9	.188	4.8	.146	3.71	.219	5.56	2

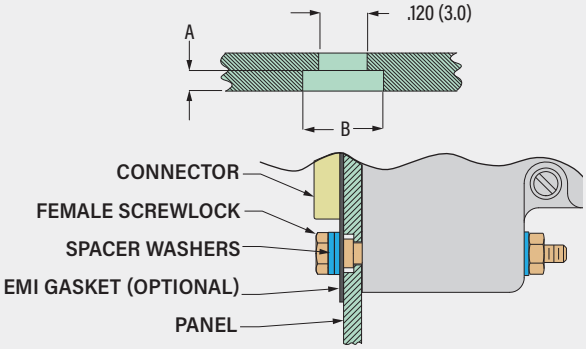

550-039

Shrouded Backshell, EMI Banding

- Split EMI Backshell
- Banding Shield Termination
- .24" (6.1mm) Band

550-039

This accessory fits D-Subminiature M24308 connectors.
Not compatible with Series 28 HiPer-D

Band platform, shrouded. 550-039 diecast aluminum backshell fits M24308 D-Subminiature connectors. EMI protected. Cable shield attaches to backshell with optional band strap. Install optional metalastic EMI gasket on mating connector panel. Connector is captivated between backshell halves. Eleven shroud lengths to accommodate mating connector mounting dimensions. #4-40 screwlocks are included. Aluminum with stainless steel screws and washers.

TABLE 1
SCREWLOCK OPTIONS

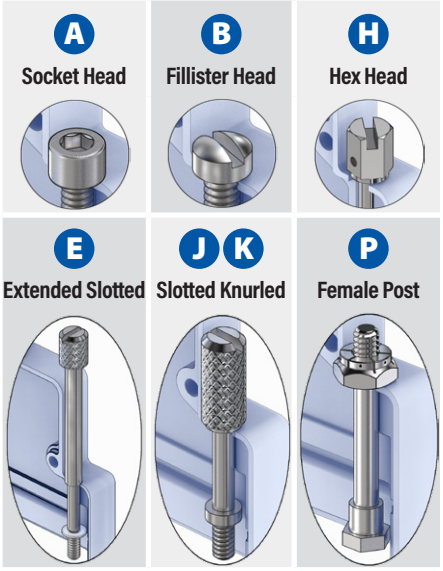

PART NUMBER

Sample PN → 550T039 M 3 R3 A 0 -03 B

Base P/N

550T039	T	Top Entry
550E039	E	End Entry
550S039	S	Side Entry

Finish

TZ	Tin-Zinc
MN	MegaNickel
JF	Cadmium, Yel. Chromate
M	Electroless Nickel
NF	Olive Drab Cadmium
MT	Nickel-PTFE
ZR	Black Zinc-Nickel

Shell Size

1 2 3 4 5 6

Shroud Length

Mating Connector Rear Panel Mounting

Code	Panel Thickness	E
R1	.031 (0.8)	.247 (6.3)
R2	.047 (1.2)	.231 (5.9)
R3	.062 (1.6)	.216 (5.5)
R4	.093 (2.4)	.185 (4.7)
R5	.104 (2.6)	.174 (4.4)
R6	.125 (3.2)	.153 (3.9)
R7	.156 (4.0)	.125 (3.2)
R8	.135 (3.4)	.140 (3.6)
R9	.188 (4.8)	.094 (2.4)
CC	Cable-to-Cable	.185 (4.7)
F0	Front Panel Mount	.343 (8.7)

Screwlocks *(Table 1)*

Code	Type	Profiles
A	Male, Socket Head	S T
B	Male, Fillister Head	S T
E	Male, Extended Slotted	S T
H	Male, Hex Head, Drilled	S T
J	Male, Slotted, Knurled	E
K	Male, Slotted, Knurled	S T
P	Female Hex Post, Fixed	S T

EMI Panel Gasket

0	No Gasket
1	Gasket Included *(install on mating connector)*

Entry Size

Entry Size	H Entry Dia.	Shell Size S	Shell Size T	Shell Size E
-01	.125 (3.2)	1-6	1-6	1-6
-02	.250 (6.4)	1-6	1-6	1-6
-03	.312 (7.9)	1-6	1-6	1-6
-04	.395 (10.0)	1-6	1-6	1-6
-05	.438 (11.1)	1-6	1-6	1-6
-06	.500 (12.7)	4-6	4-6	4-6
-07	.562 (14.3)	4-6	4-6	4-6
-08	.624 (15.8)	4-6	4-6	6
-09	.688 (17.5)	6	6	6
-10	.750 (19.1)	6	6	6
-11	.812 (20.6)	6	6	6
-12	.875 (22.2)	6	6	6
-13	.937 (23.8)	6	6	6
-14	1.000 (25.4)	6	6	6

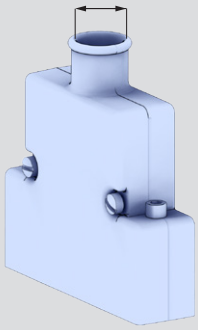

Band

Omit	No Band
B	Standard Band Included
J	Slim Standard Band Included

© 2024 Glenair, Inc • 1211 Air Way, Glendale, CA 91201 • 818-247-6000 • www.glenair.com • U.S. CAGE code 06324 • Rectangular Accessories
Dimensions in Inches (millimeters) are subject to change without notice.

550-039

Shrouded Backshell, EMI Banding

- Split EMI Backshell
- Banding Shield Termination
- .24" (6.1mm) Band

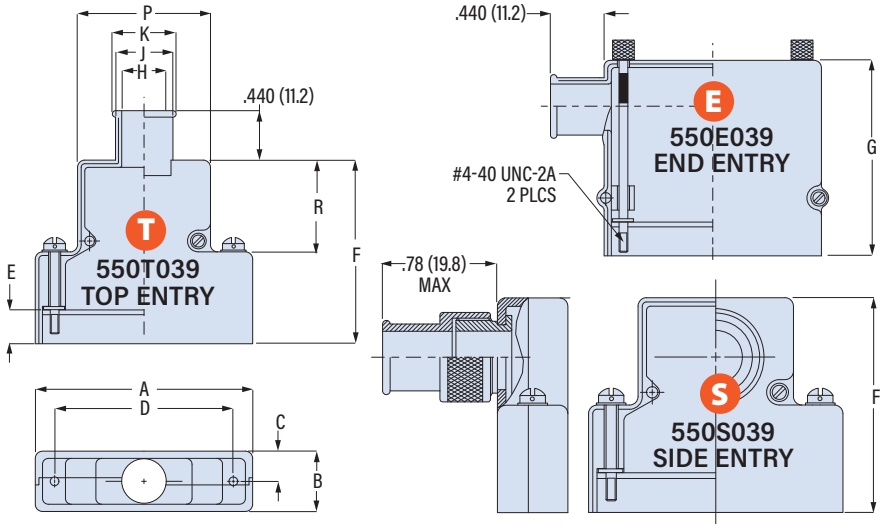

Shell Size	A Max in	A Max mm	B Max in	B Max mm	C in	C mm	D ± .005 (0.13) in	D ± .005 (0.13) mm	P in	P mm	R in	R mm	Max Entry Size
1	1.393	35.4	.624	15.8	.312	7.9	.984	25.0	.730	18.5	.719	18.3	05
2	1.706	43.3	.624	15.8	.312	7.9	1.312	33.3	1.050	26.7	.719	18.3	05
3	2.265	57.5	.624	15.8	.312	7.9	1.852	47.0	1.594	40.5	.938	23.8	05
4	2.900	73.7	.624	15.8	.312	7.9	2.500	63.5	2.240	56.9	.938	23.8	08 ⚠
5	2.800	71.1	.750	19.1	.375	9.5	2.406	61.1	2.140	54.4	.938	23.8	08
6	2.900	73.7	.844	21.4	.422	10.7	2.500	63.5	2.240	56.9	1.094	27.8	14

⚠ 07 is Max Entry Size for End Entry Shell Size 4.

Shroud Length	Mating Connector Panel Thickness in	Mating Connector Panel Thickness mm	E Shroud Length in	E Shroud Length mm	F Size 1, 2 in	F Size 1, 2 mm	F Size 3, 4, 5 in	F Size 3, 4, 5 mm	F Size 6 in	F Size 6 mm	G Size 1, 2 in	G Size 1, 2 mm	G Size 3-6 in	G Size 3-6 mm
CC	N/A	N/A	.185	4.7	1.467	37.3	1.686	42.8	1.842	46.8	1.592	40.4	1.842	46.8
F0	N/A	N/A	.343	8.7	1.625	41.3	1.844	46.8	2.000	50.8	1.750	44.5	2.000	50.8
R1	.031	0.8	.247	6.3	1.529	38.8	1.748	44.4	1.904	48.4	1.654	42.0	1.904	48.4
R2	.047	1.2	.231	5.9	1.513	38.4	1.732	44.0	1.888	48.0	1.638	41.6	1.888	48.0
R3	.062	1.6	.216	5.5	1.498	38.0	1.717	43.6	1.873	47.6	1.623	41.2	1.873	47.6
R4	.093	2.4	.185	4.7	1.467	37.3	1.686	42.8	1.842	46.8	1.592	40.4	1.842	46.8
R5	.104	2.6	.174	4.4	1.456	37.0	1.675	42.5	1.831	46.5	1.581	40.2	1.831	46.5
R6	.125	3.2	.153	3.9	1.435	36.4	1.654	42.0	1.810	46.0	1.560	39.6	1.810	46.0
R7	.156	4.0	.125	3.2	1.407	35.7	1.626	41.3	1.782	45.3	1.532	38.9	1.782	45.3
R8	.135	3.4	.140	3.6	1.422	36.1	1.641	41.7	1.797	45.7	1.547	39.3	1.797	45.7
R9	.188	4.8	.094	2.4	1.376	34.9	1.595	40.5	1.751	44.5	1.501	38.1	1.751	44.5

Entry Size	ø H in	ø H mm	ø J in	ø J mm	ø K in	ø K mm
01	.125	3.2	.250	6.4	.312	7.9
02	.250	6.4	.375	9.5	.438	11.1
03	.312	7.9	.438	11.1	.500	12.7
04	.395	10.0	.500	12.7	.562	14.3
05	.438	11.1	.562	14.3	.625	15.9
06	.500	12.7	.625	15.9	.688	17.5
07	.562	14.3	.688	17.5	.750	19.1
08	.624	15.8	.750	19.1	.812	20.6
09	.688	17.5	.812	20.6	.875	22.2
10	.750	19.1	.875	22.2	.937	23.8
11	.812	20.6	.937	23.8	1.000	25.4
12	.875	22.2	1.000	25.4	1.125	28.6
13	.937	23.8	1.062	27.0	1.187	30.1
14	1.000	25.4	1.125	28.6	1.250	31.8

EMI PANEL GASKET

Install gasket on front side of mating connector panel. Gasket is die cut from .020" thick metalastic (aluminum mesh and silicone) material. When backshell is fastened to panel connector, the front edge of the shroud seats onto gasket for aperture-free EMI protection.

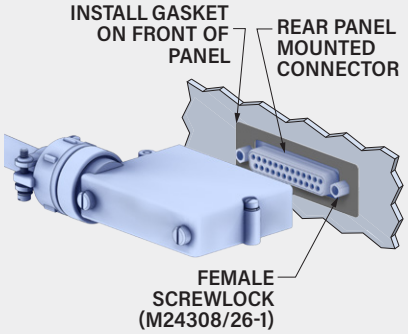

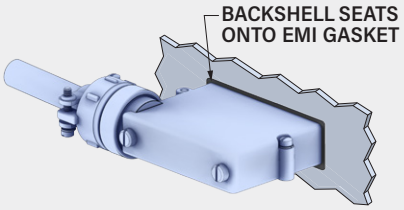

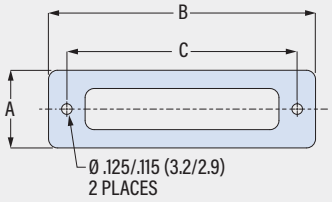

Shell Size	Gasket Part No.	A in	A mm	B in	B mm	C in	C mm
1	559-002-1	.740	18.8	1.500	38.1	.980	24.9
2	559-002-2	.740	18.8	1.810	46.0	1.310	33.3
3	559-002-3	.740	18.8	2.380	60.5	1.850	47.0
4	559-002-4	.740	18.8	3.010	76.5	2.500	63.5
5	559-002-5	.850	21.6	2.920	74.2	2.410	61.2
6	559-002-6	.925	23.5	3.010	76.5	2.500	63.5

BAND OPTIONS

Terminate cable braid to backshell with optional band strap and banding tool. Pre-coiled bands are passivated stainless steel. Slim Standard bands have reduced thickness for weight reduction.

Band Type and Width	Hand Tool	Pneumatic Tool
Standard: .24 (6.1)	601-100	601-106
Slim Standard: .24 (6.1)	601-109	601-110

© 2024 Glenair, Inc • 1211 Air Way, Glendale, CA 91201 • 818-247-6000 • www.glenair.com • U.S. CAGE code 06324 • Rectangular Accessories
Dimensions in Inches (millimeters) are subject to change without notice.

550-041
Shrouded Backshell, TAG Ring®

- Split EMI Backshell
- TAG Ring® Shield Termination
- Saddle Clamp Strain Relief

T Top Entry

S Side Entry

E End Entry

TAG® RING

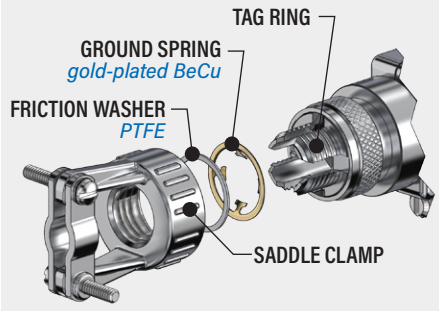

550-041

This accessory fits D-Subminiature M24308 connectors.
Not compatible with Series 28 HiPer-D

TAG Ring® for terminating individual shields, shrouded. 550-041 diecast aluminum backshell fits M24308 D-Subminiature connectors. EMI protected. TAG ring has slots for terminating wire shields. Install optional metalastic EMI gasket on mating connector panel. Available with saddle clamp strain relief or gland nut. Eleven shroud lengths to accommodate mating connector mounting dimensions. #4-40 screwlocks are included. Aluminum with stainless steel hardware.

TABLE 1
SCREWLOCK OPTIONS

A	B	H
Socket Head	Fillister Head	Hex Head
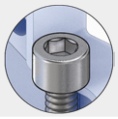	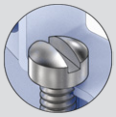	
E	**J K**	**P**
Extended Slotted	Slotted Knurled	Female Post
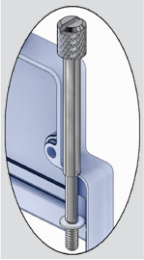	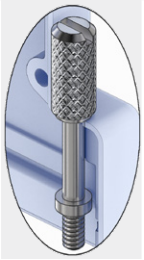	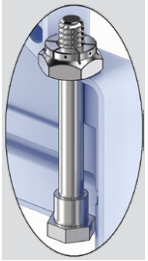

PART NUMBER

Sample PN➜ **550T041 M 3 R3 A 0 L T**

Base P/N	550T041	T Top Entry
	550E041	E End Entry
	550S041	S Side Entry
Finish	TZ	Tin-Zinc
	MN	MegaNickel
	JF	Cadmium, Yel. Chromate
	M	Electroless Nickel
	NF	Olive Drab Cadmium
	MT	Nickel-PTFE
	ZR	Black Zinc-Nickel
Shell Size	1 2 3 4 5 6	

Shroud Length — Mating Connector Rear Panel Mounting

Code	Panel Thickness	E
R1	.031 (0.8)	.247 (6.3)
R2	.047 (1.2)	.231 (5.9)
R3	.062 (1.6)	.216 (5.5)
R4	.093 (2.4)	.185 (4.7)
R5	.104 (2.6)	.174 (4.4)
R6	.125 (3.2)	.153 (3.9)
R7	.156 (4.0)	.125 (3.2)
R8	.135 (3.4)	.140 (3.6)
R9	.188 (4.8)	.094 (2.4)
CC	Cable-to-Cable	.174 (4.4)
F0	Front Panel Mount	.343 (8.7)

Screwlocks *(Table 1)*

Code	Type	Profiles
A	Male, Socket Head	S T
B	Male, Fillister Head	S T
E	Male, Extended Slotted	S T
H	Male, Hex Head, Drilled	S T
J	Male, Slotted, Knurled	E
K	Male, Slotted, Knurled	S T
P	Female Hex Post, Fixed	S T

EMI Panel Gasket	0	No Gasket
	1	Gasket Included *(install on mating connector)*
Strain Relief	L	Saddle Clamp
	G	Gland Nut

Shrink Boot	*0mit*	No Shrink Boot
	T	Shrink Boot Included

© 2024 Glenair, Inc • 1211 Air Way, Glendale, CA 91201 • 818-247-6000 • www.glenair.com • U.S. CAGE code 06324 • Rectangular Accessories
Dimensions in Inches (millimeters) are subject to change without notice.

550-041

Shrouded Backshell, TAG Ring®

- Split EMI Backshell
- TAG Ring® Shield Termination
- Saddle Clamp Strain Relief

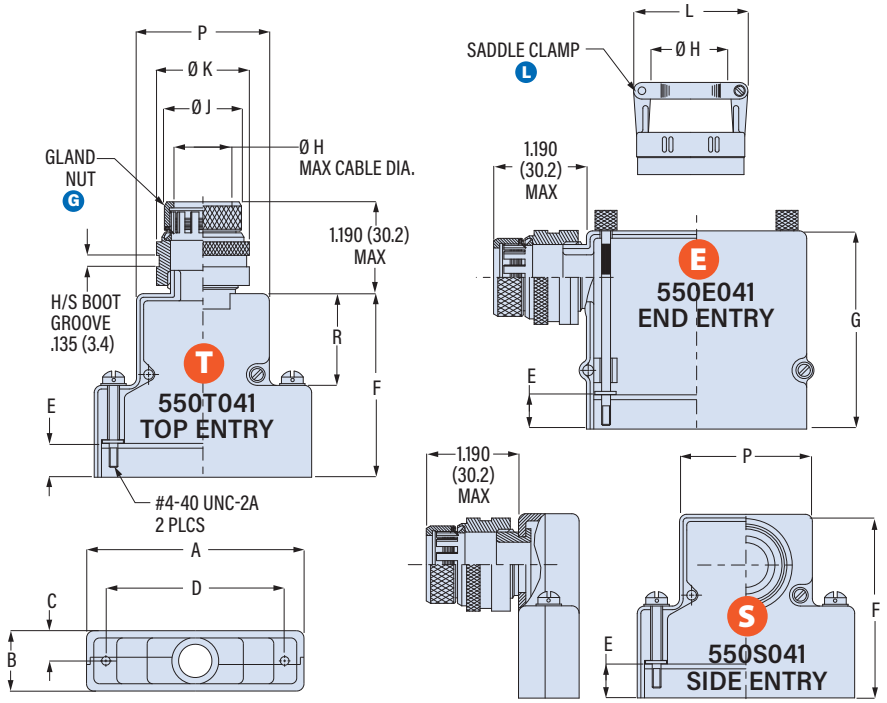

Shell Size	A Max in	A Max mm	B Max in	B Max mm	C in	C mm	D ±.005 (0.13) in	D ±.005 (0.13) mm	P in	P mm	R in	R mm
1	1.393	35.4	.624	15.8	.312	7.9	.984	25.0	.730	18.5	.719	18.3
2	1.706	43.3	.624	15.8	.312	7.9	1.312	33.3	1.050	26.7	.719	18.3
3	2.265	57.5	.624	15.8	.312	7.9	1.852	47.0	1.594	40.5	.938	23.8
4	2.900	73.7	.624	15.8	.312	7.9	2.500	63.5	2.240	56.9	.938	23.8
5	2.800	71.1	.750	19.1	.375	9.5	2.406	61.1	2.140	54.4	.938	23.8
6	2.900	73.7	.844	21.4	.422	10.7	2.500	63.5	2.240	56.9	1.094	27.8

Shell Size	ø H Max Cable Dia. in	ø H Max Cable Dia. mm	ø J Max Gland Nut in	ø J Max Gland Nut mm	ø K Max in	ø K Max mm	L Max. Saddle Clamp in	L Max. Saddle Clamp mm
1	.250	6.4	.545	13.8	.650	16.5	.968	24.6
2	.375	9.5	.670	17.0	.774	19.7	1.046	26.6
3	.475	12.1	.795	20.2	.963	24.5	1.156	29.4
4	.475	12.1	.795	20.2	.963	24.5	1.156	29.4
5	.575	14.6	.920	23.4	1.042	26.5	1.218	30.9
6	1.000	25.4	1.295	32.9	1.420	36.1	1.593	40.5

Shroud Length	Mating Connector Panel Thickness in	Mating Connector Panel Thickness mm	E Shroud Length in	E Shroud Length mm	F Size 1, 2 in	F Size 1, 2 mm	F Size 3, 4, 5 in	F Size 3, 4, 5 mm	F Size 6 in	F Size 6 mm	G Size 1, 2 in	G Size 1, 2 mm	G Size 3-5 in	G Size 3-5 mm
CC	N/A	N/A	.174	4.4	1.451	36.9	1.671	42.4	1.827	46.2	1.583	40.2	1.831	46.5
F0	N/A	N/A	.343	8.7	1.625	41.3	1.844	46.8	2.000	50.8	1.750	44.5	2.000	50.8
R1	.031	0.8	.247	6.3	1.525	38.7	1.745	44.3	1.890	48.0	1.656	42.1	1.904	48.4
R2	.047	1.2	.231	5.9	1.509	38.3	1.728	43.9	1.875	47.6	1.640	41.7	1.888	48.0
R3	.062	1.6	.216	5.5	1.500	38.1	1.720	43.7	1.860	47.2	1.625	41.3	1.873	47.6
R4	.093	2.4	.185	4.7	1.470	37.3	1.690	42.9	1.829	46.5	1.594	40.5	1.842	46.8
R5	.104	2.6	.174	4.4	1.451	36.9	1.671	42.4	1.820	46.2	1.583	40.2	1.831	46.5
R6	.125	3.2	.153	3.9	1.430	36.3	1.650	41.9	1.798	45.7	1.563	39.7	1.811	46.0
R7	.156	4.0	.125	3.2	1.400	35.6	1.620	41.1	1.767	44.9	1.531	38.9	1.781	45.2
R8	.135	3.4	.140	3.6	1.417	36.0	1.637	41.6	1.805	45.8	1.550	39.4	1.798	45.7
R9	.188	4.8	.094	2.4	1.368	34.7	1.590	40.4	1.740	44.2	1.500	38.1	1.750	44.5

EMI PANEL GASKET

Install gasket on front side of mating connector panel. Gasket material is .020" thick metalastic (aluminum mesh and silicone) . When backshell is fastened to panel connector, the front edge of the shroud seats onto gasket for aperture-free EMI protection.

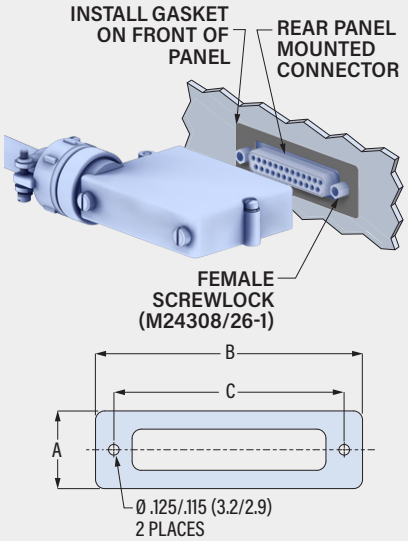

Shell Size	Gasket Part No.	A in	A mm	B in	B mm	C in	C mm
1	559-002-1	.740	18.8	1.500	38.1	.980	24.9
2	559-002-2	.740	18.8	1.810	46.0	1.310	33.3
3	559-002-3	.740	18.8	2.380	60.5	1.850	47.0
4	559-002-4	.740	18.8	3.010	76.5	2.500	63.5
5	559-002-5	.850	21.6	2.920	74.2	2.410	61.2
6	559-002-6	.925	23.5	3.010	76.5	2.500	63.5

SHRINK BOOT

Optional heatshrink boot provides cable strain relief. Lipped boot fits .135 (3.4) wide boot groove. Type 1 high-performance semi-rigid elastomer resists fuels and oils and withstands temperature extremes. Operating temperature range -75 to +150 °C.

Shell Size	Shrink Boot P/N
1	770-001S103
2	770-001S104
3	770-001S105
4	770-001S105
5	770-001S106
6	770-001S107

550-100
Shrouded Backshell, Saddle Clamp

- Split Backshell
- For Unshielded Cable
- Saddle Clamp Strain Relief

T Top Entry

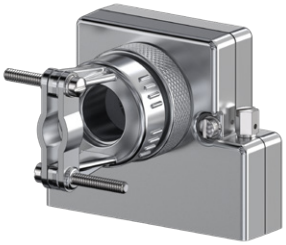

S Side Entry

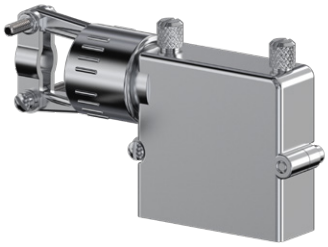

E End Entry

550-100

This accessory fits D-Subminiature M24308 connectors.
Not compatible with Series 28 HiPer-D

Saddle clamp, shrouded. 550-100 diecast aluminum backshell fits M24308 D-Subminiature connectors. Type L saddle clamp strain relief. Eleven shroud lengths to accommodate mating connector mounting dimensions. #4-40 screwlocks are included. Aluminum with stainless steel hardware.

TABLE 1
SCREWLOCK OPTIONS

A Socket Head

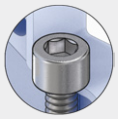

B Fillister Head

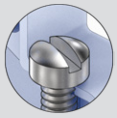

H Hex Head

E Extended Slotted

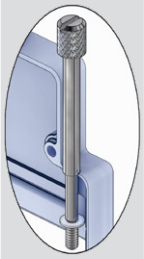

J K Slotted Knurled

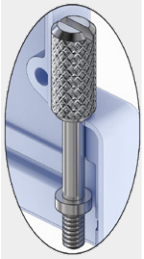

P Female Post

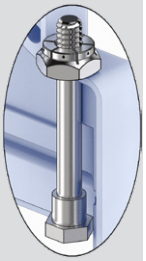

PART NUMBER

Sample PN➜ **550T100 M 3 R3 A**

Base P/N	550T100	T Top Entry
	550E100	E End Entry *(Shell Size 1–5)*
	550S100	S Side Entry
Finish	TZ	Tin-Zinc
	MN	MegaNickel
	JF	Cadmium, Yel. Chromate
	M	Electroless Nickel
	NF	Olive Drab Cadmium
	MT	Nickel-PTFE
	ZR	Black Zinc-Nickel
Shell Size	1 2 3 4 5 6	

Shroud Length

Mating Connector Rear Panel Mounting

Code	Panel Thickness	E
R1	.031 (0.8)	.247 (6.3)
R2	.047 (1.2)	.231 (5.9)
R3	.062 (1.6)	.216 (5.5)
R4	.093 (2.4)	.185 (4.7)
R5	.104 (2.6)	.174 (4.4)
R6	.125 (3.2)	.153 (3.9)
R7	.156 (4.0)	.125 (3.2)
R8	.138 (3.5)	.140 (3.6)
R9	.188 (4.8)	.094 (2.4)
CC	Cable-to-Cable	.170-.172 (4.3-4.4)
F0	Front Panel Mount	.340-.344 (8.6-8.7)

Screwlocks *(Table 1)*

Code	Type	Profiles
A	Male, Socket Head	S T
B	Male, Fillister Head	S T
E	Male, Extended Slotted	S T
H	Male, Hex Head, Drilled	S T
J	Male, Slotted, Knurled	E
K	Male, Slotted, Knurled	S T
P	Female Hex Post, Fixed	S T

© 2024 Glenair, Inc • 1211 Air Way, Glendale, CA 91201 • 818-247-6000 • www.glenair.com • U.S. CAGE code 06324 • Rectangular Accessories
Dimensions in Inches (millimeters) are subject to change without notice.

550-100

Shrouded Backshell, Saddle Clamp

- Split Backshell
- For Unshielded Cable
- Saddle Clamp Strain Relief

550T100 TOP ENTRY

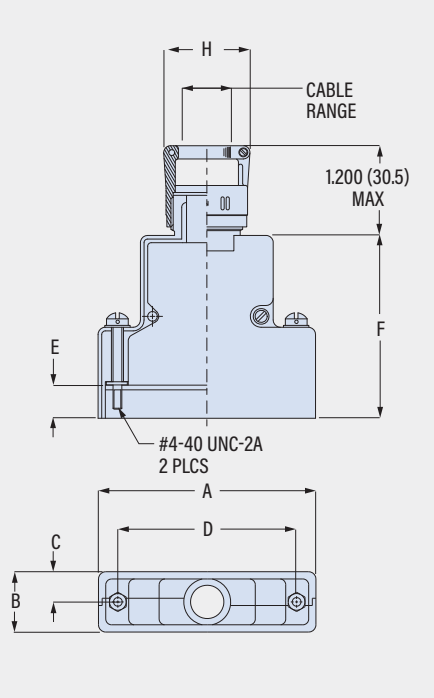

550E100 END ENTRY

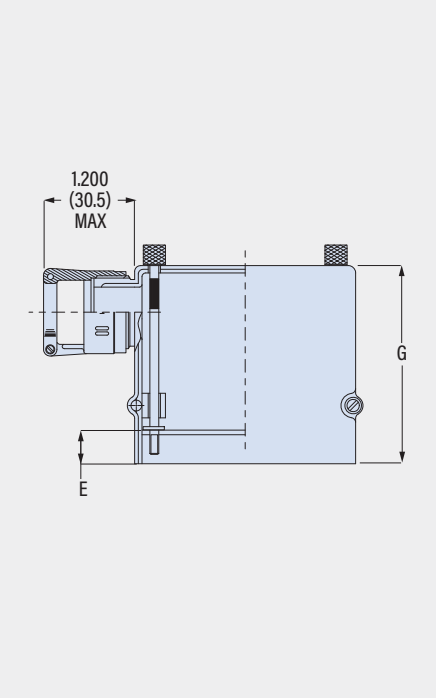

550S100 SIDE ENTRY

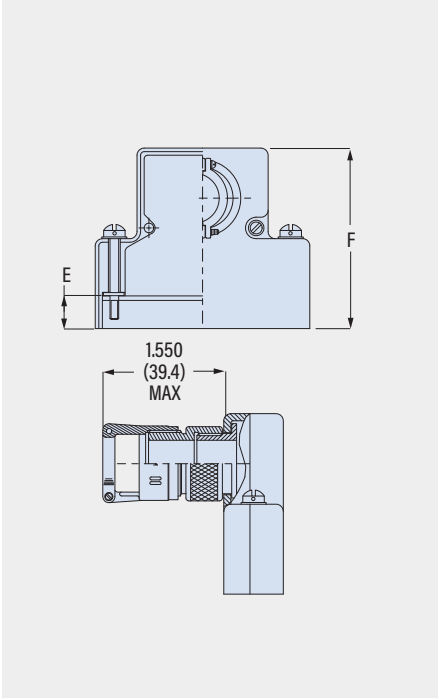

Shell Size	A Max in	A Max mm	B Max in	B Max mm	C in	C mm	D ±.005 (0.13) in	D ±.005 (0.13) mm	H Max in	H Max mm	Cable Range Profile S, T Min in	Cable Range Profile S, T Min mm	Cable Range Profile S, T Max in	Cable Range Profile S, T Max mm	Cable Range Profile E Min in	Cable Range Profile E Min mm	Cable Range Profile E Max in	Cable Range Profile E Max mm
1	1.393	35.4	.624	15.8	.312	7.9	.984	25.0	1.046	26.6	.125	3.2	.250	6.4	.250	6.4	.375	9.5
2	1.691	43.3	.624	15.8	.312	7.9	1.312	33.3	1.046	26.6	.250	6.4	.375	9.5	.250	6.4	.375	9.5
3	2.250	57.5	.624	15.8	.312	7.9	1.852	47.0	1.156	29.4	.312	7.9	.475	12.1	.312	7.9	.475	12.1
4	2.879	73.7	.624	15.8	.312	7.9	2.500	63.5	1.156	29.4	.312	7.9	.475	12.1	.312	7.9	.475	12.1
5	2.785	71.1	.750	19.1	.375	9.5	2.406	61.1	1.218	30.9	.437	11.1	.575	14.6	.437	11.1	.575	14.6
6	2.875	73.7	.844	21.4	.422	10.7	2.500	63.5	1.594	40.5	.812	20.6	1.000	25.4	N/A	N/A	N/A	N/A

Shroud Length	Mating Connector Panel Thickness in	Mating Connector Panel Thickness mm	E Shroud Length in	E Shroud Length mm	F Size 1, 2 in	F Size 1, 2 mm	F Size 3, 4, 5 in	F Size 3, 4, 5 mm	F Size 6 in	F Size 6 mm	G Size 1, 2 in	G Size 1, 2 mm	G Size 3, 4, 5 in	G Size 3, 4, 5 mm
CC	N/A	N/A	.170-.172	4.3-4.4	1.455	36.9	1.673	42.4	1.844	46.2	1.583	40.2	1.831	46.5
F0	N/A	N/A	.343-.344	8.7	1.625	41.3	1.844	46.8	2.000	50.8	1.750	44.5	2.000	50.8
R1	.031	0.8	.247	6.3	1.525	38.7	1.745	44.3	1.890	48.0	1.656	42.1	1.904	48.4
R2	.047	1.2	.231	5.9	1.509	38.3	1.728	43.9	1.875	47.6	1.640	41.7	1.888	48.0
R3	.062	1.6	.216	5.5	1.500	38.1	1.720	43.7	1.860	47.2	1.625	41.3	1.873	47.6
R4	.093	2.4	.185	4.7	1.470	37.3	1.690	42.9	1.829	46.5	1.594	40.5	1.842	46.8
R5	.104	2.6	.174	4.4	1.451	36.9	1.671	42.4	1.820	46.2	1.583	40.2	1.831	46.5
R6	.125	3.2	.153	3.9	1.430	36.3	1.650	41.9	1.798	45.7	1.563	39.7	1.811	46.0
R7	.156	4.0	.125	3.2	1.400	35.6	1.620	41.1	1.767	44.9	1.531	38.9	1.781	45.2
R8	.138	3.4	.140	3.6	1.417	36.0	1.637	41.6	1.805	45.8	1.550	39.4	1.798	45.7
R9	.188	4.8	.094	2.4	1.368	34.7	1.590	40.6	1.740	44.2	1.500	38.1	1.750	44.5

© 2024 Glenair, Inc • 1211 Air Way, Glendale, CA 91201 • 818-247-6000 • www.glenair.com • U.S. CAGE code 06324 • Rectangular Accessories
Dimensions in Inches (millimeters) are subject to change without notice.

550-102
Shrouded Backshell, Qwik-Ty®

- Split Backshell
- For Unshielded Cable
- Qwik-Ty® Strain Relief

550-102

This accessory fits D-Subminiature M24308 connectors.
Not compatible with Series 28 HiPer-D

Qwik-Ty strain relief, split, shrouded. 550-102 diecast aluminum backshell fits M24308 D-Subminiature connectors. Attach cable tie to Qwik-Ty arm for strain relief. Connector is captivated between backshell halves. Eleven shroud lengths to accommodate mating connector mounting dimensions. #4-40 screwlocks are included. Aluminum with stainless steel screws and washers.

PART NUMBER

Sample PN➜ **550T102 M 2 R4 H**

Base P/N

Base Part No.	Profile	Shell Sizes
550T102	T Top Entry	1-6
550E102	E End Entry	1-5
550S102	S Side Entry	1-5

Finish

TZ	Tin-Zinc
MN	MegaNickel
JF	Cadmium, Yel. Chromate
M	Electroless Nickel
NF	Olive Drab Cadmium
MT	Nickel-PTFE
ZR	Black Zinc-Nickel

Shell Size 1 2 3 4 5 6

Shroud Length

Mating Connector Rear Panel Mounting

Code	Panel Thickness	E
R1	.031 (0.8)	.247 (6.3)
R2	.047 (1.2)	.231 (5.9)
R3	.062 (1.6)	.216 (5.5)
R4	.093 (2.4)	.185 (4.7)
R5	.104 (2.6)	.174 (4.4)
R6	.125 (3.2)	.153 (3.9)
R7	.156 (4.0)	.125 (3.2)
R8	.138 (3.5)	.140 (3.6)
R9	.188 (4.8)	.094 (2.4)
CC	Cable-to-Cable	.170-.172 (4.3-4.4)
F0	Front Panel Mount	.340-.344 (8.6-8.7)

Screwlocks *(Table 1)*

Code	Type	Profiles
A	Male, Socket Head	S T
B	Male, Fillister Head	S T
E	Male, Extended Slotted	S T
H	Male, Hex Head, Drilled	S T
J	Male, Slotted, Knurled	E
K	Male, Slotted, Knurled	S T
P	Female Hex Post, Fixed	S T

TABLE 1 SCREWLOCK OPTIONS

A	B	H	E	J K	P
Socket Head	Fillister Head	Hex Head	Extended Slotted	Slotted Knurled	Female Post

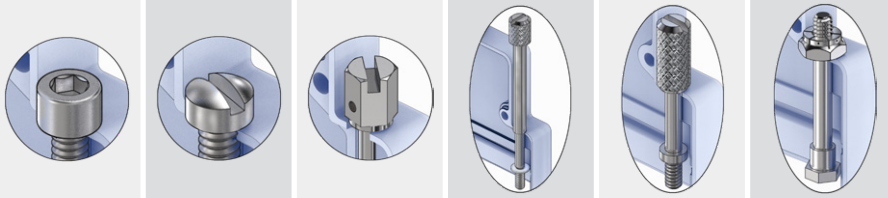

© 2024 Glenair, Inc • 1211 Air Way, Glendale, CA 91201 • 818-247-6000 • www.glenair.com • U.S. CAGE code 06324 • Rectangular Accessories
Dimensions in Inches (millimeters) are subject to change without notice.

550-102

Shrouded Backshell, Qwik-Ty®

- Split Backshell
- For Unshielded Cable
- Qwik-Ty® Strain Relief

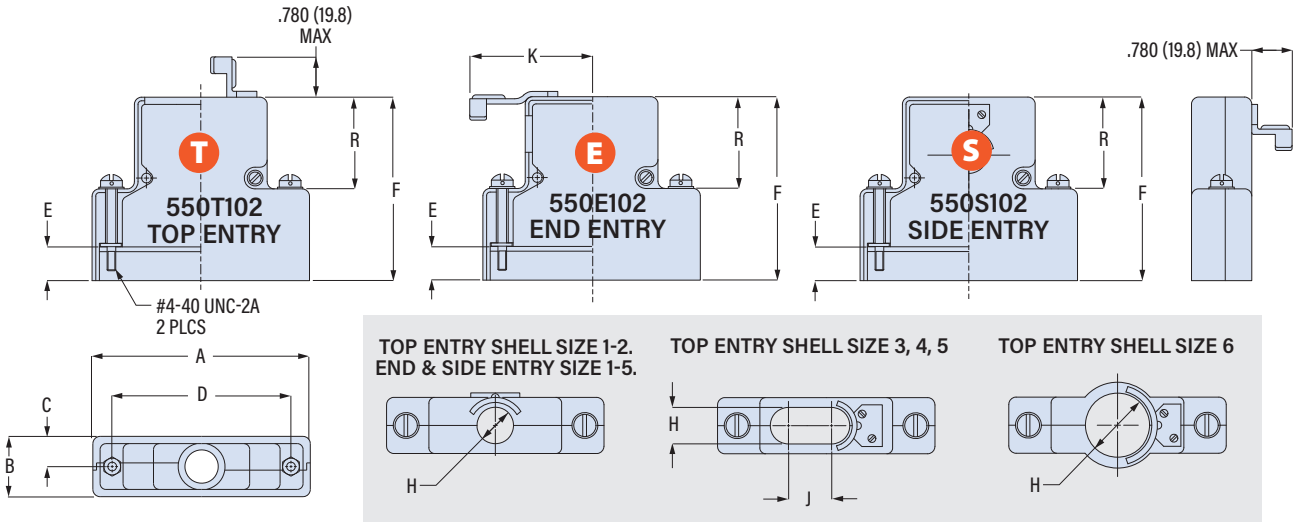

Shell Size	A Max		B Max		C		D ± .005 (0.13)		H Entry		J		K Max		R Ref	
	in	mm	in	mm	in	mm	in	mm	in	mm	in	mm	in	mm	in	mm
1	1.393	35.4	.624	15.8	.312	7.9	.984	25.0	.437	11.1	-	-	1.080	27.4	.719	18.3
2	1.706	43.3	.624	15.8	.312	7.9	1.312	33.3	.500	12.7	-	-	1.250	31.8	.719	18.3
3	2.265	57.5	.624	15.8	.312	7.9	1.852	47.0	.500	12.7	.200	5.1	1.520	38.6	.938	23.8
4	2.900	73.7	.624	15.8	.312	7.9	2.500	63.5	.500	12.7	.600	15.2	1.840	46.7	.938	23.8
5	2.800	71.1	.750	19.1	.375	9.5	2.406	61.1	.600	15.2	.500	12.7	1.790	45.5	.938	23.8
6	2.900	73.7	.844	21.4	.422	10.7	2.500	63.5	1.020	25.9	-	-	1.840	46.7	1.094	27.8

Shroud Length	Mating Connector Panel Thickness		E Shroud Length		F ± .031 (0.8) Size 1, 2		Size 3, 4, 5		Size 6	
	in	mm	in	mm	in	mm	in	mm	in	mm
CC	N/A	N/A	.174	4.4	1.455	36.9	1.673	42.4	1.844	46.2
F0	N/A	N/A	.343	8.7	1.625	41.3	1.844	46.8	2.000	50.8
R1	.031	0.8	.247	6.3	1.509	38.7	1.728	44.3	1.875	48.0
R2	.047	1.2	.231	5.9	1.509	38.3	1.728	43.9	1.875	47.6
R3	.062	1.6	.216	5.5	1.500	38.1	1.720	43.7	1.860	47.2
R4	.093	2.4	.185	4.7	1.470	37.3	1.690	42.9	1.829	46.5
R5	.104	2.6	.174	4.4	1.451	36.9	1.671	42.4	1.820	46.2
R6	.125	3.2	.153	3.9	1.430	36.3	1.650	41.9	1.798	45.7
R7	.156	4.0	.125	3.2	1.400	35.6	1.620	41.1	1.767	44.9
R8	.138	3.4	.140	3.6	1.417	36.0	1.637	41.6	1.785	45.8
R9	.188	4.8	.094	2.4	1.368	34.7	1.590	40.6	1.740	44.2

© 2024 Glenair, Inc • 1211 Air Way, Glendale, CA 91201 • 818-247-6000 • www.glenair.com • U.S. CAGE code 06324 • Rectangular Accessories
Dimensions in Inches (millimeters) are subject to change without notice.

557-186

Shrouded Backshell, Composite Banding

- Split EMI Backshell
- Banding Shield Termination
- Composite Thermoplastic

557-186

This accessory fits D-Subminiature M24308 connectors.
Not compatible with Series 28 HiPer-D

Corrosion-free lightweight composite.
557-186 composite thermoplastic backshell fits M24308 D-Subminiature connectors. EMI protected. Cable shield attaches to backshell with optional band strap. Install optional EMI gasket on mating connector panel. Connector is captivated between backshell halves. Eleven shroud lengths to accommodate mating connector mounting dimensions. #4-40 screwlocks are included. Thermoplastic with stainless steel screws and washers.

TABLE 1
SCREWLOCK OPTIONS

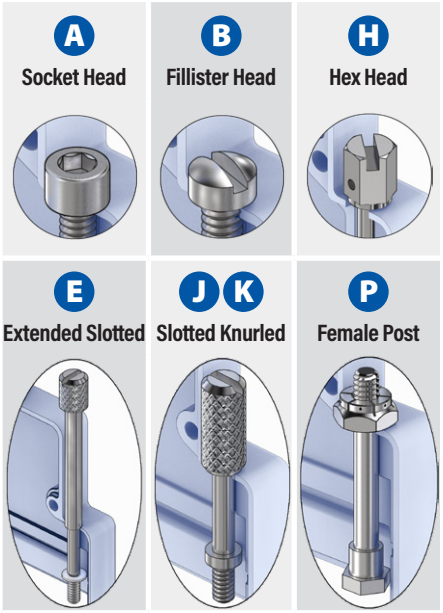

PART NUMBER

Sample PN➜ **557T186 XM 3 R3 A 0 -04 S K**

Base P/N

557T186	T	Top Entry
557E186	E	End Entry
557S186	S	Side Entry

Finish

XM	Electroless Nickel
XW	Olive Drab Cadmium
XMT	Nickel-PTFE

Shell Size

1 2 3 4 5 6

Shroud Length

Mating Connector Rear Panel Mounting

Code	Panel Thickness	E
R1	.031 (0.8)	.247 (6.3)
R2	.047 (1.2)	.231 (5.9)
R3	.062 (1.6)	.216 (5.5)
R4	.093 (2.4)	.185 (4.7)
R5	.104 (2.6)	.174 (4.4)
R6	.125 (3.2)	.153 (3.9)
R7	.156 (4.0)	.125 (3.2)
R8	.135 (3.4)	.140 (3.6)
R9	.188 (4.8)	.094 (2.4)
CC	Cable-to-Cable	.174 (4.4)
F0	Front Panel Mtng.	.343 (8.7)

Screwlocks *(Table 1)*

		Profiles
A	Male, Socket Head	S T
B	Male, Fillister Head	S T
E	Male, Extended Slotted	S T
H	Male, Hex Head, Drilled	S T
J	Male, Slotted, Knurled	E
K	Male, Slotted, Knurled	S T
P	Female Hex Post, Fixed	S T

EMI Panel Gasket

0	No Gasket
1	Gasket Included *(install on mating connector)*

Entry Size

Entry Size	ø H	Shell Size S	Shell Size T	Shell Size E
-01	.125 (3.2)	1-5	1-6	1-6
-02	.250 (6.4)	1-5	1-6	1-6
-03	.312 (7.9)	1-5	1-6	1-6
-04	.395 (10.0)	1-5	1-6	1-6
-05	.438 (11.1)	2-5	1-6	1-6
-06	.500 (12.7)	5-5	5-6	5-6
-07	.562 (14.3)	5	5-6	5-6
-08	.625 (15.9)	-	6	6
-09	.750 (19.1)	-	6	6
-10	.875 (22.2)	-	6	6
-11	1.000 (25.4)	-	6	6

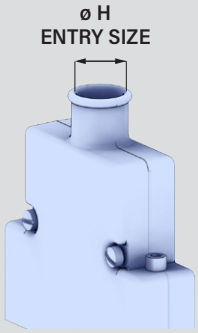

Slot

Omit	No Slot
S	Slot *(in banding area)*

Band

Omit	No Band
B	Standard Band Included
J	Slim Standard Band Included

© 2024 Glenair, Inc • 1211 Air Way, Glendale, CA 91201 • 818-247-6000 • www.glenair.com • U.S. CAGE code 06324 • Rectangular Accessories
Dimensions in Inches (millimeters) are subject to change without notice.

557-186

Shrouded Backshell, Composite Banding

- Split EMI Backshell
- Banding Shield Termination
- Composite Thermoplastic

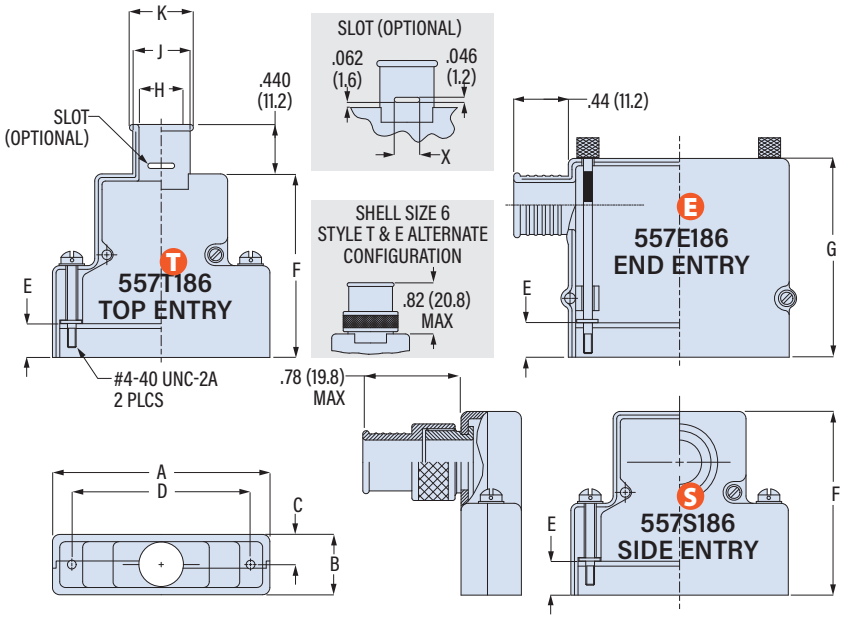

Shell Size	A Max in	A Max mm	B Max in	B Max mm	C in	C mm	D ± .005 (0.13) in	D ± .005 (0.13) mm	Max Entry Size S	Max Entry Size T	Max Entry Size E
1	1.393	35.4	.624	15.8	.312	7.9	.984	25.0	04	05	05
2	1.706	43.3	.624	15.8	.312	7.9	1.312	33.3	05	05	05
3	2.265	57.5	.624	15.8	.312	7.9	1.852	47.0	05	05	05
4	2.900	73.7	.624	15.8	.312	7.9	2.500	63.5	05	05	05
5	2.800	71.1	.750	19.1	.375	9.5	2.406	61.1	07	07	07
6	2.900	73.7	.844	21.4	.422	10.7	2.500	63.5	-	11	11

Shroud Length	Mating Connector Panel Thickness in	Mating Connector Panel Thickness mm	E* Shroud Length in	E* Shroud Length mm	F* ± .031 (0.8) Size 1, 2 in	F* Size 1, 2 mm	F* Size 3, 4, 5 in	F* Size 3, 4, 5 mm	F* Size 6 in	F* Size 6 mm	G* ± .031 (0.8) Size 1, 2 in	G* Size 1, 2 mm	G* Size 3-6 in	G* Size 3-6 mm
CC	N/A	N/A	.185	4.7	1.455	37.3	1.673	42.8	1.829	46.8	1.592	40.4	1.842	46.8
F0	N/A	N/A	.343	8.7	1.625	41.3	1.844	46.8	2.000	50.8	1.750	44.5	2.000	50.8
R1	.031	0.8	.247	6.3	1.525	38.7	1.745	44.3	1.904	48.4	1.656	42.1	1.904	48.4
R2	.047	1.2	.231	5.9	1.509	38.3	1.728	43.9	1.888	48.0	1.640	41.7	1.888	48.0
R3	.062	1.6	.216	5.5	1.500	38.1	1.720	43.7	1.873	47.6	1.625	41.3	1.873	47.6
R4	.093	2.4	.185	4.7	1.470	37.3	1.690	42.9	1.842	46.8	1.594	40.5	1.842	46.8
R5	.104	2.6	.174	4.4	1.451	36.9	1.671	42.4	1.831	46.5	1.585	40.3	1.833	46.6
R6	.125	3.2	.153	3.9	1.430	36.3	1.650	41.9	1.811	46.0	1.563	39.7	1.811	46.0
R7	.156	4.0	.125	3.2	1.400	35.6	1.620	41.1	1.781	45.2	1.532	38.9	1.780	45.2
R8	.135	3.4	.140	3.6	1.422	36.1	1.641	41.7	1.797	45.7	1.547	39.3	1.797	45.7
R9	.188	4.8	.094	2.4	1.376	34.9	1.595	40.5	1.751	44.5	1.501	38.1	1.751	44.5

*+.030/-.000 for CC only

Entry Size	ø H in	ø H mm	ø J in	ø J mm	ø K in	ø K mm	X in	X mm
01	.125	3.2	.250	6.4	.312	7.9	N/A	N/A
02	.250	6.4	.375	9.5	.438	11.1	.062	1.6
03	.312	7.9	.438	11.1	.500	12.7	.094	2.4
04	.395	10.0	.500	12.7	.562	14.3	.156	4.0
05	.438	11.1	.562	14.3	.625	15.9	.188	4.8
06	.500	12.7	.625	15.9	.688	17.5	.219	5.6
07	.562	14.3	.688	17.5	.750	19.1	.250	6.4
08	.625	15.9	.750	19.1	.812	20.6	.250	6.4
09	.750	19.1	.875	22.2	.937	23.8	.312	7.9
10	.875	22.2	1.000	25.4	1.062	27.0	.375	9.5
11	1.000	25.4	1.125	28.6	1.188	30.2	.375	9.5

EMI PANEL GASKET

Install gasket on front side of mating connector panel. Gasket material: metalastic (aluminum mesh and silicone). When backshell is fastened to panel connector, the front edge of the shroud seats onto gasket for aperture-free EMI protection.

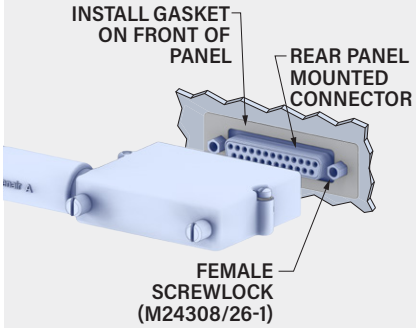

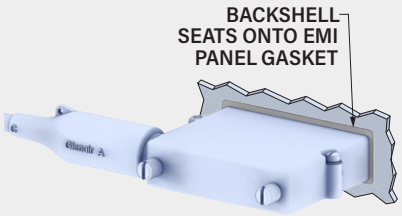

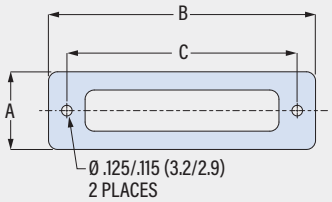

Shell Size	Gasket Part No.	A in	A mm	B in	B mm	C in	C mm
1	559-002-1	.740	18.8	1.500	38.1	.980	24.9
2	559-002-2	.740	18.8	1.810	46.0	1.310	33.3
3	559-002-3	.740	18.8	2.380	60.5	1.850	47.0
4	559-002-4	.740	18.8	3.010	76.5	2.500	63.5
5	559-002-5	.850	21.6	2.920	74.2	2.410	61.2
6	559-002-6	.925	23.5	3.010	76.5	2.500	63.5

BAND OPTIONS

Terminate cable braid to backshell with optional band strap and banding tool. Pre-coiled bands are passivated stainless steel. Slim Standard bands have reduced thickness for weight reduction.

Band Type and Width	Hand Tool	Pneumatic Tool
Standard: .24 (6.1)	601-100	601-106
Slim Standard: .24 (6.1)	601-109	601-110

557-538

Shrouded Backshell, Banding, Composite Snap-Together

- Split EMI Backshell
- Banding Shield Termination
- Lightweight Composite

557-538

This accessory fits D-Subminiature M24308 connectors.
Not compatible with Series 28 HiPer-D

Lightweight composite, snap-together.
557-538 composite thermoplastic backshell fits M24308 D-Subminiature connectors. Two-piece snap-together backshell offers simple, fast assembly. Banding platform has Qwik-Ty strain relief arm and optional slots for individual wire shields. Backshell fully shrouds the connector. Eleven shroud lengths: Choose shroud length based on mating connector mounting style. Cable shield attaches to backshell with optional band strap. Connector is captivated between backshell halves. #4-40 screwlocks are included. Thermoplastic with stainless steel screws and washers.

PART NUMBER

Sample PN → **557T538 XM 314 R3 B S K**

Base P/N	**557T538**	
Finish	**XM**	Electroless Nickel
	XMT	Nickel-PTFE
Shell Size	Size Code	Shell Size
	114	1 (DE)
	214	2 (DA)
	314	3 (DB)
	414	4 (DC)
	517	5 (DD)

Shroud Length — Mating Connector Rear Panel Mounting

Code	Panel Thickness	L
R1	.031 (0.8)	.247 (6.3)
R2	.047 (1.2)	.231 (5.9)
R3	.062 (1.6)	.216 (5.5)
R4	.093 (2.4)	.185 (4.7)
R5	.104 (2.6)	.174 (4.4)
R6	.125 (3.2)	.153 (3.9)
R7	.156 (4.0)	.125 (3.2)
R8	.135 (3.4)	.140 (3.6)
R9	.188 (4.8)	.094 (2.4)
CC	Cable-to-Cable	.174 (4.4)
F0	Front Panel Mtng.	.343 (8.7)

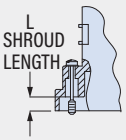

Screwlocks *(Table 1)*	**B**	Male, Fillister Head
	E	Male, Extended Slotted
	K	Male, Socket Head, Knurled
Slot	***Omit***	No Slot
	S	Slot *(in Banding Area)*
Band	***Omit***	No Band
	K	Standard Band Included
	J	Slim Standard Band Included

TABLE 1
HARDWARE OPTIONS

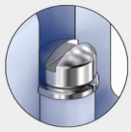

B Fillister Head

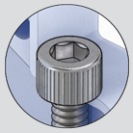

K Socket Head

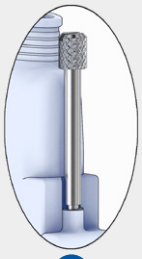

E Extended Slotted

© 2024 Glenair, Inc • 1211 Air Way, Glendale, CA 91201 • 818-247-6000 • www.glenair.com • U.S. CAGE code 06324 • Rectangular Accessories
Dimensions in Inches (millimeters) are subject to change without notice.

557-538

Shrouded Backshell, Banding, Snap-Together

- Split EMI Backshell
- Banding Shield Termination
- Lightweight Composite

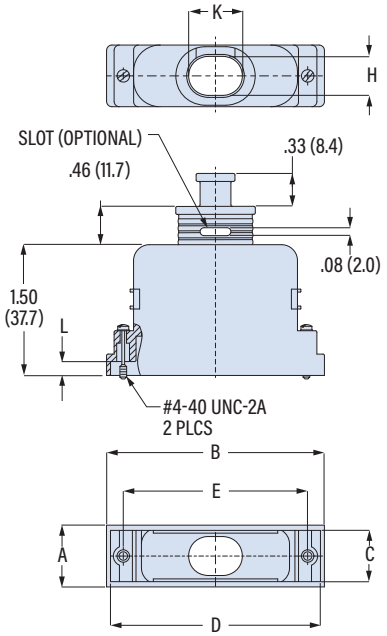

Shroud Length	Mating Connector Panel Thickness in	Mating Connector Panel Thickness mm	L Shroud Length in	L Shroud Length mm
CC	N/A	N/A	.174	4.4
F0	N/A	N/A	.343	8.7
R1	.031	0.8	.247	6.3
R2	.047	1.2	.231	5.9
R3	.062	1.6	.216	5.5
R4	.093	2.4	.185	4.7
R5	.104	2.6	.174	4.4
R6	.125	3.2	.153	3.9
R7	.156	4.0	.125	3.2
R8	.135	3.4	.140	3.6
R9	.188	4.8	.094	2.4

Shell Size	A Max in	A Max mm	B in	B mm	C Min in	C Min mm	D Min in	D Min mm	E ±.005 (0.13) in	E ±.005 (0.13) mm	H in	H mm	J in	J mm	K in	K mm
1	.625	15.9	1.395	35.4	.510	13.0	1.229	31.2	.984	25.0	.436	11.1	.436	11.1	.436	11.1
2	.625	15.9	1.723	43.8	.510	13.0	1.557	39.5	1.312	33.3	.436	11.1	.759	19.3	.759	19.3
3	.625	15.9	2.270	57.7	.510	13.0	2.104	53.4	1.852	47.0	.436	11.1	.875	22.2	1.125	28.6
4	.625	15.9	2.911	73.9	.510	13.0	2.745	69.7	2.500	63.5	.436	11.1	1.100	27.9	1.773	45.0
5	.750	19.1	2.817	71.6	.620	15.7	2.651	67.3	2.406	61.1	.547	13.9	1.100	27.9	1.679	42.6

BAND OPTIONS

Terminate cable braid to backshell with optional band strap and banding tool. Pre-coiled bands are passivated stainless steel. Slim Standard bands have reduced thickness for weight reduction.

Band Type and Width	Hand Tool	Pneumatic Tool
Standard: .24 (6.1)	601-100	601-106
Slim Standard: .24 (6.1)	601-109	601-110

© 2024 Glenair, Inc • 1211 Air Way, Glendale, CA 91201 • 818-247-6000 • www.glenair.com • U.S. CAGE code 06324 • Rectangular Accessories
Dimensions in Inches (millimeters) are subject to change without notice.

557-609

Split Lip Backshell, EMI Banding

- Round or Elliptical Entry
- 1-3 Entries
- Split Backshell

557-609

This accessory fits D-Subminiature M24308 connectors.
Not compatible with Series 28 HiPer-D

Two piece banding, round or elliptical entry. 557-609 backshell fits M24308 D-Subminiature connectors. EMI protected. Cable shield attaches to backshell with optional band strap. Connector is captivated between backshell halves. #4-40 socket head screwlocks are included. Aluminum with stainless steel screws and washers.

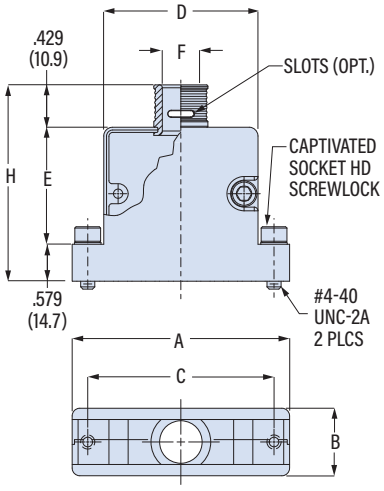

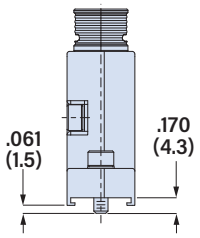

PART NUMBER

Sample PN → **557T609 M 4 R1 S K**

Base P/N	**557T609**
Material/ Finish	**TZ** Tin-Zinc **MN** MegaNickel **JF** Cadmium, Yel. Chromate **M** Electroless Nickel **NF** Olive Drab Cadmium **MT** Nickel-PTFE **ZR** Black Zinc-Nickel
Shell Size	**1 2 3 4 5 6**
Entry	Code / Shell Size **R1** 1 Round Entry — 1-6 **R2** 2 Round Entries — 3-6 **R3** 3 Round Entries — 4-6 **E1** 1 Elliptical Entry — 2-6 **R1E1** 1 Round and 1 Elliptical — 3-6
Slots	***Omit*** No Slot **S** Slot *(in banding area)*
Band	***Omit*** No Band **B** Standard Band Included **J** Slim Standard Band Included

ENTRY R1 R2 R3
ROUND ENTRY

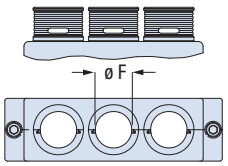

ENTRY E1
1 ELLIPTICAL ENTRY

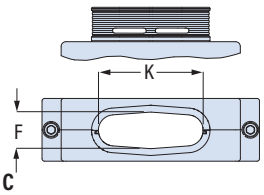

ENTRY R1E1
1 ELLIPTICAL AND 1 ROUND ENTRY

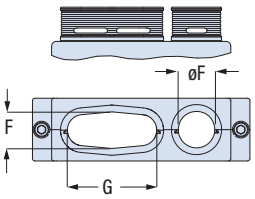

Shell Size	A in	A mm	B in	B mm	±.005 (0.13) in	±.005 (0.13) mm	D in	D mm	E Max in	E Max mm	F Max in	F Max mm	G Max in	G Max mm	H in	H mm	K Max in	K Max mm
1	1.213	30.8	.630	16.0	.984	25.0	.728	18.5	1.300	33.0	.315	8.0	N/A	N/A	2.308	58.6	N/A	N/A
2	1.535	39.0	.630	16.0	1.312	33.3	1.059	26.9	1.300	33.0	.315	8.0	N/A	N/A	2.308	58.6	.661	16.8
3	2.087	53.0	.630	16.0	1.852	47.0	1.598	40.6	1.520	38.6	.315	8.0	.575	14.6	2.528	64.2	1.200	30.5
4	2.728	69.3	.630	16.0	2.500	63.5	2.248	57.1	1.520	38.6	.315	8.0	1.225	31.1	2.528	64.2	1.850	47.0
5	2.638	67.0	.750	19.1	2.406	61.1	2.192	55.7	1.520	38.6	.433	11.0	1.051	26.7	2.528	64.2	1.794	45.6
6	2.728	69.3	.787	20.0	2.500	63.5	2.248	57.1	1.520	38.6	.470	11.9	1.070	27.2	2.528	64.2	1.850	47.0

BAND OPTIONS

Terminate cable braid to backshell with optional band strap and banding tool. Pre-coiled bands are passivated stainless steel. Slim Standard bands have reduced thickness for weight reduction.

Band Type and Width	Hand Tool	Pneumatic Tool
Standard: .24 (6.1)	601-100	601-106
Slim Standard: .24 (6.1)	601-109	601-110

© 2024 Glenair, Inc • 1211 Air Way, Glendale, CA 91201 • 818-247-6000 • www.glenair.com • U.S. CAGE code 06324 • Rectangular Accessories
Dimensions in Inches (millimeters) are subject to change without notice.

557-071
EMI Banding Backshell

- Solid EMI Backshell, .25" Flange
- Banding Shield Termination
- Qwik-Ty® Strain Relief

T Top Entry

S Side Entry

B 45°Entry

E End Entry

557-071

This accessory fits D-Subminiature M24308 connectors.
Not compatible with Series 28 HiPer-D

One piece, banding, .25 (6.4) flange.
557-071 lightweight aluminum backshell fits M24308 D-Subminiature connectors. Supplied with #4-40 male screwlocks. Terminate cable braid to backshell with banding strap. Optional slot for individual shield pigtails. Optional Qwik-Ty arm for attaching cable tie (not supplied). Aluminum with stainless steel screwlocks and clips.

TABLE 1
SCREWLOCK OPTIONS

No Designator	C
4-40 Socket Head Male Jackscrews with "E" Rings	4-40 Socket Head Male Screwlocks with Clips
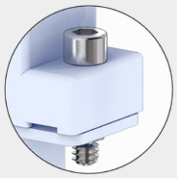	

PART NUMBER

Sample PN➜ **557T071 M 3 31 S C T K**

Base P/N

557B071	B	45° Entry
557E071	E	End Entry
557S071	S	Side Entry
557T071	T	Top Entry

Finish

TZ	Tin-Zinc
MN	MegaNickel
JF	Cadmium, Yel. Chromate
M	Electroless Nickel
NF	Olive Drab Cadmium
MT	Nickel-PTFE
ZR	Black Zinc-Nickel

Shell Size

1 2 3 4 5 6

Entry Size

Entry Size	Entry Dia.	Shell Size
16	.175 (4.4)	1-6
23	.250 (6.4)	1-6
30	.312 (7.9)	1-6
31	.375 (9.5)	1-6
32	.430 (10.9)	1-6
33	.550 (14.0)	5-6

Slot

Omit	No Slot
S	Slot *(in banding area)*

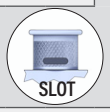

Screwlocks *(Table 1)*

Omit	Socket Head Jackscrews with "E" Rings
C	Socket Head Screwlocks with Clips

Qwik-Ty

Omit	No Qwik-Ty Strain Relief Arm
T	Qwik-Ty Arm Included

Band

Omit	No Band
B	Standard Band Included
J	Slim Standard Band Included

© 2024 Glenair, Inc • 1211 Air Way, Glendale, CA 91201 • 818-247-6000 • www.glenair.com • U.S. CAGE code 06324 • Rectangular Accessories
Dimensions in Inches (millimeters) are subject to change without notice.

557-071
EMI Banding Backshell

- Solid EMI Backshell, .25" Flange
- Banding Shield Termination
- Qwik-Ty® Strain Relief

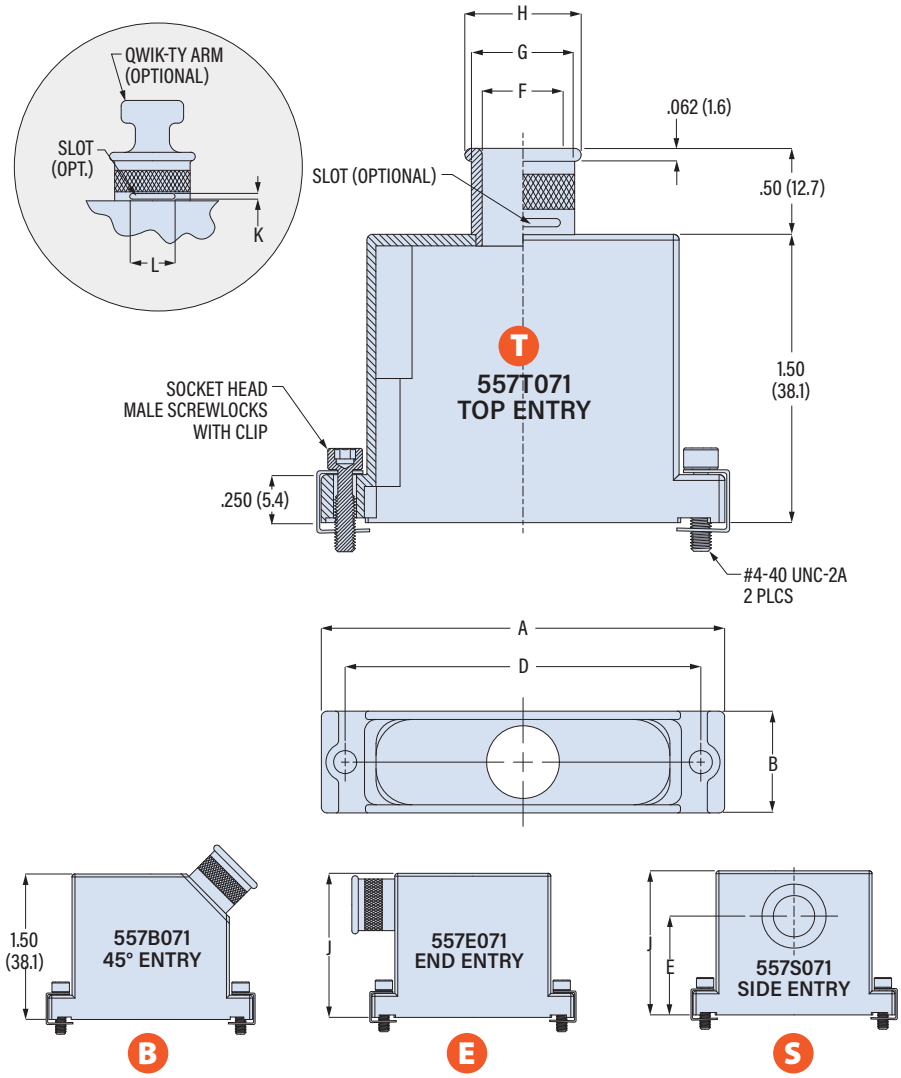

Shell Size	A Max in	A Max mm	B in	B mm	D ± .005 (0.13) in	D ± .005 (0.13) mm	E in	E mm	J in	J mm	Max Entry Size
1	1.25	31.8	.53	13.5	.984	25.0	1.25	31.8	1.68	42.7	32
2	1.58	40.1	.53	13.5	1.312	33.3	1.25	31.8	1.68	42.7	32
3	2.13	54.1	.53	13.5	1.852	47.0	1.25	31.8	1.68	42.7	32
4	2.77	70.4	.53	13.5	2.500	63.5	1.25	31.8	1.68	42.7	32
5	2.68	68.1	.66	16.8	2.406	61.1	1.38	35.1	1.81	46.0	33
6	2.77	70.4	.73	18.5	2.500	63.5	1.47	37.3	1.97	50.0	33

Entry Size	ø F in	ø F mm	ø G in	ø G mm	ø H in	ø H mm	K in	K mm	L in	L mm
16	.175	4.4	.300	7.6	.412	10.5	.08	2.0	.19	4.8
23	.250	6.4	.375	9.5	.487	12.4	.08	2.0	.22	5.6
30	.312	7.9	.437	11.1	.550	14.0	.08	2.0	.25	6.4
31	.375	9.5	.500	12.7	.612	15.5	.08	2.0	.28	7.1
32	.430	10.9	.555	14.1	.667	16.9	.08	2.0	.31	7.9
33	.550	14.0	.675	17.1	.787	20.0	.08	2.0	.38	9.7

SCREWLOCK OPTIONS

No Designator

4-40 Socket Head Male Jackscrews with "E" Rings

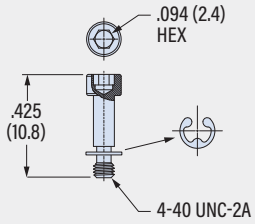

Part Number **687-172**
Order 2 per backshell

C

4-40 Socket Head Male Screwlocks with Clips

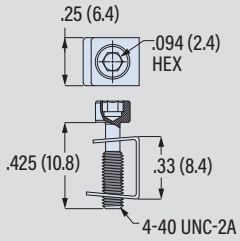

Part Number **687-236**
Order 2 per backshell

BAND OPTIONS

Terminate cable braid to backshell with optional band strap and banding tool. Pre-coiled bands are passivated stainless steel. Slim Standard bands have reduced thickness for weight reduction.

Band Type and Width	Hand Tool	Pneumatic Tool
Standard: .24 (6.1)	601-100	601-106
Slim Standard: .24 (6.1)	601-109	601-110

© 2024 Glenair, Inc • 1211 Air Way, Glendale, CA 91201 • 818-247-6000 • www.glenair.com • U.S. CAGE code 06324 • Rectangular Accessories
Dimensions in Inches (millimeters) are subject to change without notice.

557-110
EMI Backshell

- Solid EMI Backshell, .25" Flange
- Cone-and-Ring Shield Termination
- Saddle Clamp Strain Relief

T Top Entry

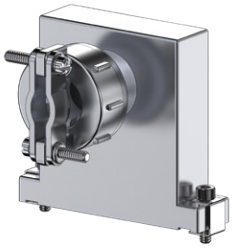

S Side Entry

E End Entry

CONE-AND-RING SHIELD TERMINATION

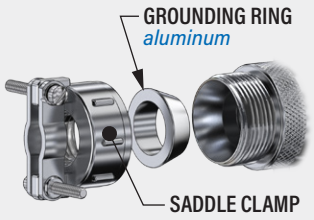

Fold braid over grounding ring. Tighten clamp onto backshell to captivate braid.

557-110

This accessory fits D-Subminiature M24308 connectors.
Not compatible with Series 28 HiPer-D

One piece, Cone-and-ring shield termination, saddle clamp, .25 (6.4) flange.
557-110 aluminum backshell fits M24308 D-Subminiature connectors. Grounding ring shield termination. Three screwlock options: male socket head, male extended length, or fixed female hex posts. Aluminum with stainless steel screws and clips.

TABLE 1
SCREWLOCK OPTIONS

C
4-40 Socket Head Male Screwlocks With Clips

F
4-40 Female Screwlocks (fixed, non-rotating)

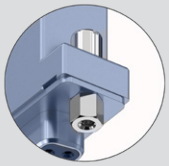

E
4-40 Extended Length Slotted Male Screwlocks With Clips

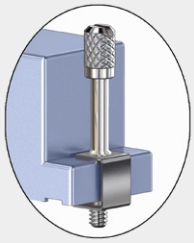

PART NUMBER

Sample PN➜ **557T110 M 3 F 03 C**

Base P/N	557E110	E End Entry
	557S110	S Side Entry
	557T110	T Top Entry
Finish	TZ	Tin-Zinc
	MN	MegaNickel
	JF	Cadmium, Yel. Chromate
	M	Electroless Nickel
	NF	Olive Drab Cadmium
	MT	Nickel-PTFE
	ZR	Black Zinc-Nickel
Shell Size	1 2 3 4 5 6	
Strain Relief	F	Saddle Clamp

Entry Size

Entry Size	Cable Range Min	Cable Range Max	Shell Size
02	.125 (3.2)	.250 (6.4)	1-6
03	.250 (6.4)	.375 (9.5)	1-6
04	.312 (7.9)	.500 (12.7)	1-6
05	.375 (9.5)	.625 (15.9)	6

Screwlocks *(Table 1)*	*Omit*	#4-40 Tapped Holes
	C	Socket Head Male Screwlocks
	E	Extended Slotted Male Screwlock *(Profiles S T only)*
	P	Female Screwlocks *(fixed)*

557-110
EMI Backshell

- Solid EMI Backshell, .25" Flange
- Cone-and-Ring Shield Termination
- Saddle Clamp Strain Relief

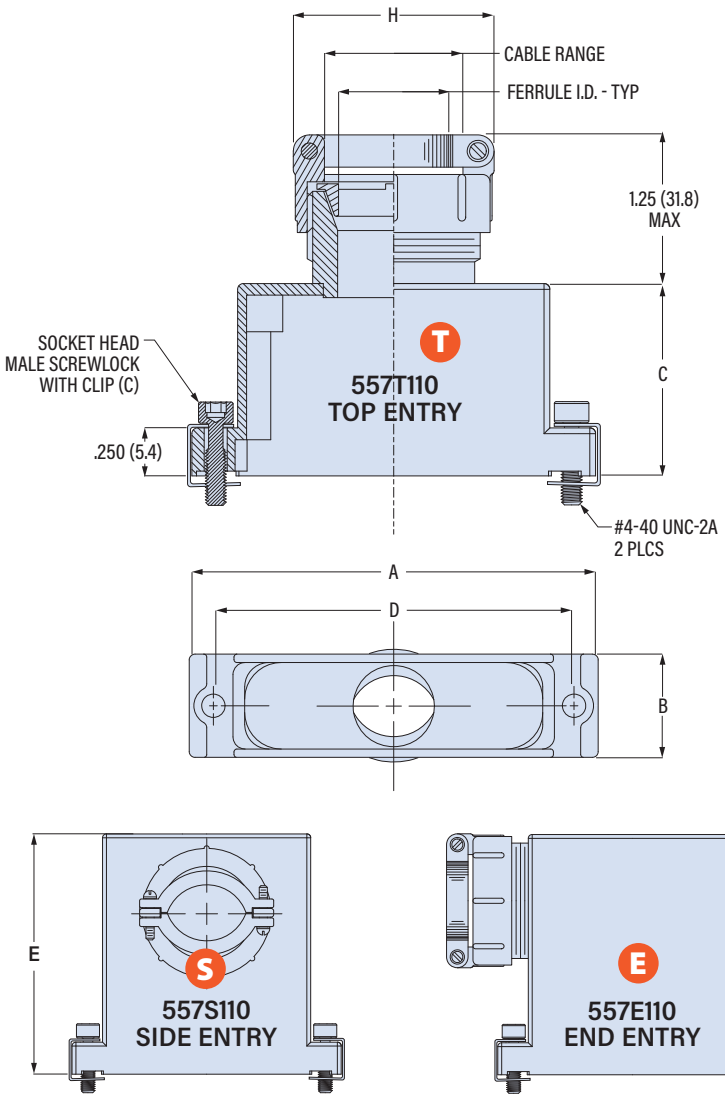

Shell Size	A Max in	A Max mm	B in	B mm	C in	C mm	D ± .005 (0.13) in	D ± .005 (0.13) mm	E in	E mm	F in	F mm	G in	G mm	Max Entry Size
1	1.25	31.8	.53	13.5	.75	19.1	.984	25.0	1.88	47.8	.43	10.9	.90	22.9	04
2	1.58	40.1	.53	13.5	.75	19.1	1.312	33.3	1.88	47.8	.43	10.9	.90	22.9	04
3	2.13	54.1	.53	13.5	1.00	25.4	1.852	47.0	1.88	47.8	.43	10.9	2.00	50.8	04
4	2.77	70.4	.53	13.5	1.00	25.4	2.500	63.5	1.88	47.8	.43	10.9	2.00	50.8	04
5	2.68	68.1	.66	16.8	1.25	31.8	2.406	61.1	2.13	54.1	.56	14.2	2.00	50.8	04
6	2.77	70.4	.73	18.5	1.25	31.8	2.500	63.5	2.22	56.4	.63	16.0	2.00	50.8	05

Entry Size	H Max in	H Max mm	Ferrule I.D. (REF) in	Ferrule I.D. (REF) mm	Cable Range Min in	Cable Range Min mm	Cable Range Max in	Cable Range Max mm
02	.968	24.6	.125	3.2	.125	3.2	.250	6.4
03	1.046	26.6	.250	6.4	.250	6.4	.375	9.5
04	1.156	29.4	.375	9.5	.312	7.9	.500	12.7
05	1.218	30.9	.500	12.7	.375	9.5	.625	15.9

SCREWLOCK OPTIONS

C

4-40 Socket Head Male Screwlocks With Clips

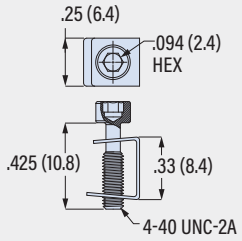

Part Number **687-236**
Order 2 per backshell

P

4-40 Female Screwlocks with Nut and Lockwasher

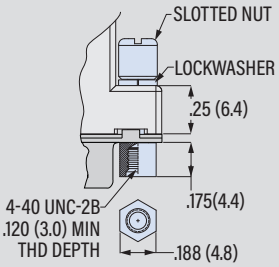

Part Number **687-418F**
Order 2 per backshell

E

4-40 Extended Length Slotted Male Screwlocks With Clips

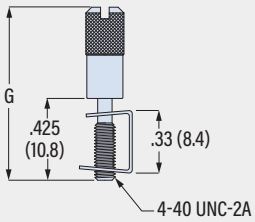

Shell Size	G Length in	G Length mm	Part Number
1, 2	.90	22.9	687-236-3
3-6	2.00	50.8	687-236-2

Order 2 per backshell

© 2024 Glenair, Inc • 1211 Air Way, Glendale, CA 91201 • 818-247-6000 • www.glenair.com • U.S. CAGE code 06324 • Rectangular Accessories
Dimensions in Inches (millimeters) are subject to change without notice.

557-246
Elliptical Micro Band Backshell

- Solid EMI Backshell, .25" Flange
- Micro Band Shield Termination
- Qwik-Ty Strain Relief

557-246

This accessory fits D-Subminiature M24308 connectors.
Not compatible with Series 28 HiPer-D

One piece, elliptical Micro band, .25 (6.4) flange. 557-246 aluminum backshell fits M24308 D-Subminiature connectors. Terminate cable braid to backshell with .12 wide (3.0) Micro band. Optional slot for routing individual pigtail shields. Optional Qwik-Ty strain relief arm. Aluminum with stainless steel screws and clips.

TABLE 1
SCREWLOCK OPTIONS

No Designator

4-40 Socket Head Male Screwlocks With Clips

P

4-40 Female Screwlocks (fixed, non-rotating)

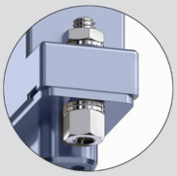

E

4-40 Extended Length Slotted Male Screwlocks With Clips

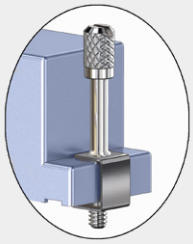

PART NUMBER

Sample PN➜ **557T246 M 3 08 S T K**

Base P/N — **557T246** Top Entry

Finish
- **TZ** Tin-Zinc
- **MN** MegaNickel
- **JF** Cadmium, Yel. Chromate
- **M** Electroless Nickel
- **NF** Olive Drab Cadmium
- **MT** Nickel-PTFE
- **ZR** Black Zinc-Nickel

Shell Size — **1 2 3 4 5 6**

Screwlocks *(Table 1)*
- ***Omit*** Socket Head Screwlocks
- **E** Extended Slotted Male Screwlock
- **P** Female Screwlocks *(fixed)*

Entry Size

Entry Size	F	Shell Size
04	.500 (12.7)	1-6
05	.625 (15.9)	1-6
06	.750 (19.1)	2-6
07	.875 (22.2)	2-6
08	1.000 (25.4)	2-6
09	1.125 (28.6)	3-6
10	1.250 (31.8)	3-6
11	1.375 (34.9)	3-6
12	1.500 (38.1)	3-6
13	1.625 (41.3)	4-6
14	1.750 (44.5)	4-6
15	1.875 (47.6)	4-6
16	2.000 (50.8)	4-6

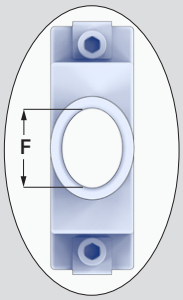

Slot
- ***Omit*** No Slot
- **S** Slot *(in banding area)*

Qwik-Ty
- ***Omit*** No Qwik-Ty Strain Relief Arm
- **T** Qwik-Ty Arm Included

Band
- ***Omit*** No Band
- **K** Micro Band Included
- **J** Micro Slim Band Included
- **L** Micro-Max Band Included

557-246
Elliptical Micro Band Backshell

- Solid EMI Backshell, .25" Flange
- Micro Band Shield Termination
- Qwik-Ty Strain Relief

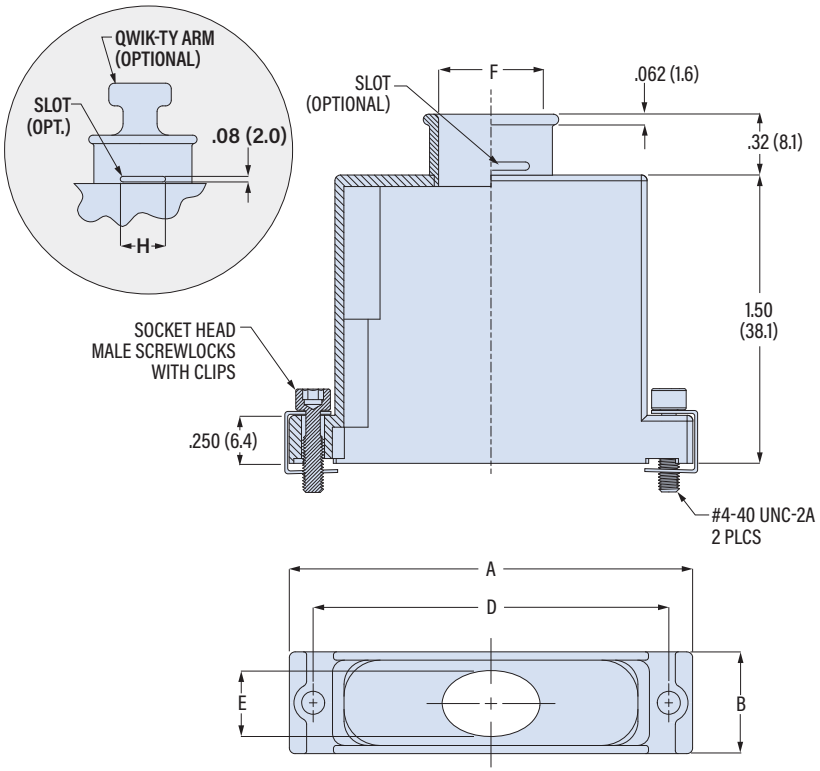

Shell Size	A Max in	A Max mm	B in	B mm	D ±.005 (0.13) in	D ±.005 (0.13) mm	E in	E mm	Max Entry Size
1	1.25	31.8	.53	13.5	.984	25.0	.375	9.5	05
2	1.58	40.1	.53	13.5	1.312	33.3	.375	9.5	08
3	2.13	54.1	.53	13.5	1.852	47.0	.375	9.5	12
4	2.77	70.4	.53	13.5	2.500	63.5	.375	9.5	16
5	2.68	68.1	.66	16.8	2.406	61.1	.484	12.3	16
6	2.77	70.4	.73	18.5	2.500	63.5	.554	14.1	16

Entry Size	F in	F mm	H in	H mm	Shell Size
04	.500	12.7	.19	4.8	1-6
05	.625	15.9	.19	4.8	1-6
06	.750	19.1	.22	5.6	2-6
07	.875	22.2	.22	5.6	2-6
08	1.000	25.4	.22	5.6	2-6
09	1.125	28.6	.22	5.6	3-6
10	1.250	31.8	.22	5.6	3-6
11	1.375	34.9	.25	6.4	3-6
12	1.500	38.1	.25	6.4	3-6
13	1.625	41.3	.25	6.4	4-6
14	1.750	44.5	.25	6.4	4-6
15	1.875	47.6	.25	6.4	4-6
16	2.000	50.8	.25	6.4	4-6

BAND OPTIONS

Terminate cable braid to backshell with optional band strap and banding tool. Pre-coiled bands are passivated stainless steel. Micro Slim bands have reduced thickness for weight reduction. Micro-Max bands are high-tension for lower-resistivity termination.

Band Type and Width	Hand Tool	Pneumatic Tool
Micro: .12 (3.0)	601-101	601-107
Micro Slim: .12 (3.0)	601-122	601-123
Micro-Max: .12 (3.0)	601-129	601-130

SCREWLOCK OPTIONS

No Designator

4-40 Socket Head Male Jackscrews with Clips

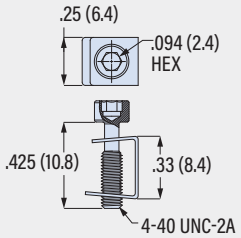

Part Number **687-236**
Order 2 per backshell

P

4-40 Female Screwlocks with Nut, Lockwasher and (2) Spacer Washers

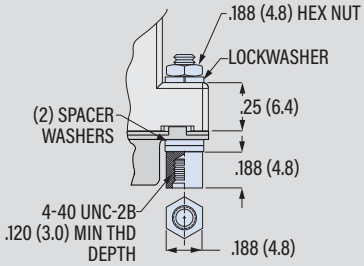

E

4-40 Extended Length Slotted Male Screwlocks With Clips

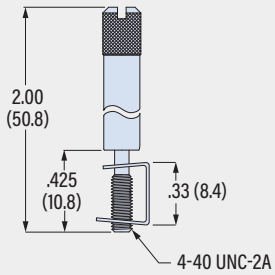

© 2024 Glenair, Inc • 1211 Air Way, Glendale, CA 91201 • 818-247-6000 • www.glenair.com • U.S. CAGE code 06324 • Rectangular Accessories
Dimensions in Inches (millimeters) are subject to change without notice.

557-316
Low Profile Banding Backshell

- Solid EMI Backshell, .25" Flange
- Banding Shield Termination
- Qwik-Ty® Strain Relief

T Top Entry

S Side Entry

B 45°Entry

E End Entry

557-316

This accessory fits D-Subminiature M24308 connectors.
Not compatible with Series 28 HiPer-D

One piece, reduced height, .25 (6.4) flange. 557-316 aluminum backshell fits M24308 D-Subminiature connectors. Top entry version has reduced can height for limited clearance equipment. Terminate cable braid to backshell with .24" (6.1) wide banding strap. Optional slot for routing individual pigtail shields. Optional Qwik-Ty strain relief arm. Aluminum with stainless steel screws and clips.

TABLE 2
SCREWLOCK OPTIONS

A

4-40 Socket Head Male Screwlocks with Clips

H

Thru-Holes *(Screwlocks not included)*

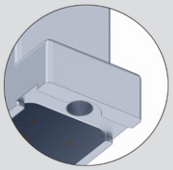

PART NUMBER

Sample PN➜ **557T316 M 3 32 S T K A**

Base P/N	557B316	B 45° Entry
	557E316	E End Entry
	557S316	S Side Entry
	557T316	T Top Entry
Finish	TZ	Tin-Zinc
	MN	MegaNickel
	JF	Cadmium, Yel. Chromate
	M	Electroless Nickel
	NF	Olive Drab Cadmium
	MT	Nickel-PTFE
	ZR	Black Zinc-Nickel
Shell Size	1 2 3 4 5 6	
Entry Size	*See Table 1*	
Slot	*Omit*	No Slot
	S	Slot *(in banding area)*
Qwik-Ty	*Omit*	No Qwik-Ty Strain Relief Arm
	T	Qwik-Ty Arm Included
Band	*Omit*	No Band
	K	Standard Band Included
	J	Slim Standard Band Included
Screwlocks *(Table 1)*	*Omit*	#4-40 Tapped Holes
	A	Socket Head Male Screwlocks
	H	Thru-Holes *(order screwlocks separately)*

TABLE 1 ENTRY SIZE

	T B Top and 45° Entry									E S End and Side Entry			
	Shell Sizes 1-4					Shell Sizes 5-6				Shell Sizes 1-6			
Entry Size	ø J in	ø J mm	K in	K mm	Shell Size	J in	J mm	K in	K mm	J in	J mm	K in	K mm
16	.188	4.8	—	—	1-4	.188	4.8	—	—	.188	4.8	—	—
23	.250	6.4	—	—	1-4	.250	6.4	—	—	.250	6.4	—	—
30	.312	7.9	—	—	1-4	.312	7.9	—	—	.312	7.9	—	—
31	.375	9.5	—	—	1-4	.375	9.5	—	—	.375	9.5	—	—
32	.438	11.1	—	—	1-4	.438	11.1	—	—	.438	11.1	—	—
33	.562	14.3	.723	18.4	2-4	.562	14.3	—	—	.562	14.3	—	—
34	.650	16.5	.967	24.6	2-4	.460	11.7	1.380	35.1	.650	16.5	—	—
35	.562	14.3	1.250	31.8	3-4	.460	11.7	1.500	38.1	—		—	—
36	—	—	—	—	—	—	—	—	—	.650	16.5	.967	24.9

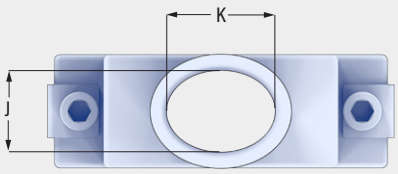

557-316
Low Profile Banding Backshell

- Solid EMI Backshell, .25" Flange
- Banding Shield Termination
- Qwik-Ty® Strain Relief

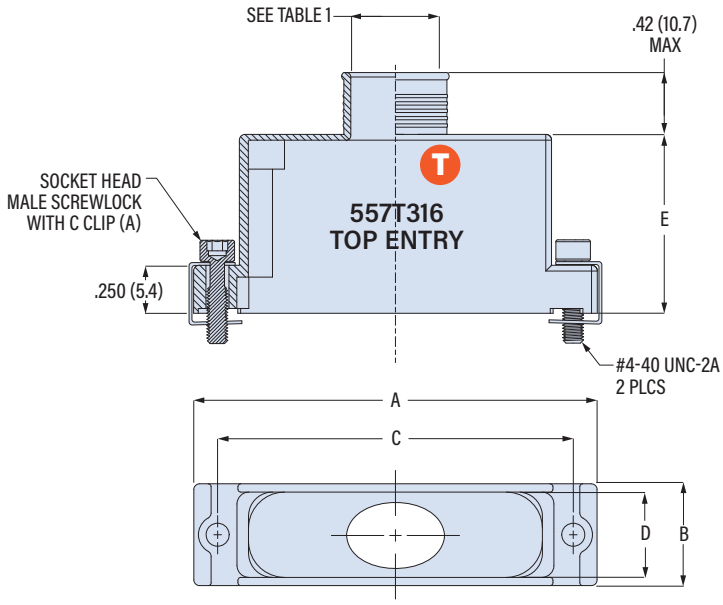

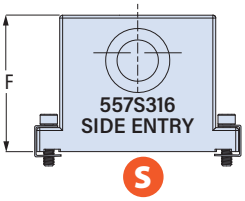

ENTRY SIZES 16-32:
G DIM

ENTRY SIZE 33:
1.40 (35.6)

ENTRY SIZES 34, 35:
1.80 (45.7)

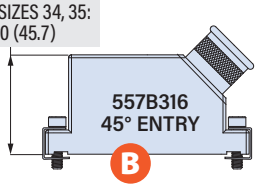

Shell Size	A Max in	A Max mm	B ±.020 (0.51) in	B ±.020 (0.51) mm	C ±.005 (0.13) in	C ±.005 (0.13) mm	D in	D mm	E Max in	E Max mm	F Max in	F Max mm	G Max in	G Max mm	H in	H mm
1	1.250	31.8	.520	13.2	.984	25.0	.440	11.2	.695	17.7	1.413	35.9	1.035	26.3	.856	21.7
2	1.580	40.1	.520	13.2	1.312	33.3	.440	11.2	.695	17.7	1.413	35.9	1.035	26.3	1.186	30.1
3	2.130	54.1	.520	13.2	1.852	47.0	.440	11.2	.945	24.0	1.413	35.9	1.035	26.3	1.727	43.9
4	2.770	70.4	.520	13.2	2.500	63.5	.440	11.2	.945	24.0	1.595	40.5	1.035	26.3	2.383	60.5
5	2.680	68.1	.629	16.0	2.406	61.1	.549	13.9	1.135	28.8	1.595	40.5	1.125	28.6	2.287	58.1
6	2.770	70.4	.690	17.5	2.500	63.5	.610	15.5	1.265	32.1	1.595	40.5	1.185	30.1	2.405	61.1

SCREWLOCKS

A

4-40 Socket Head Male Screwlocks with "C" Clips

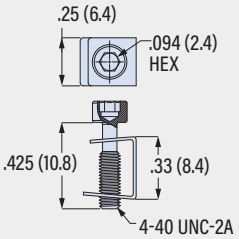

Part Number **687-236**
Order 2 per backshell

SLOT OPTION

Entry Size	L in	L mm
16	.19	4.8
23	.22	5.6
30	.25	6.4
31	.28	7.1
32	.31	7.9
33	.38	9.7
34	.44	11.2
35	.45	11.4

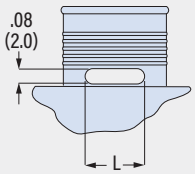

QWIK-TY OPTION

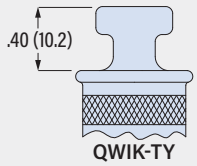

QWIK-TY

BAND OPTIONS

Terminate cable braid to backshell with optional band strap and banding tool. Pre-coiled bands are passivated stainless steel. Slim Standard bands have reduced thickness for weight reduction.

Band Type and Width	Hand Tool	Pneumatic Tool
Standard: .24 (6.1)	601-100	601-106
Slim Standard: .24 (6.1)	601-109	601-110

© 2024 Glenair, Inc • 1211 Air Way, Glendale, CA 91201 • 818-247-6000 • www.glenair.com • U.S. CAGE code 06324 • Rectangular Accessories
Dimensions in Inches (millimeters) are subject to change without notice.

557-432
Low Profile Micro Band Backshell

- Solid EMI Backshell, .25" Flange
- Micro Band Shield Termination
- Qwik-Ty® Strain Relief

T Top Entry

B 45° Entry

557-432

This accessory fits D-Subminiature M24308 connectors.
Not compatible with Series 28 HiPer-D

One piece, reduced can height, Micro band shield termination. 557-432 aluminum backshell fits M24308 D-Subminiature connectors. Low profile backshell has reduced can height for limited clearance equipment. Terminate cable braid to backshell with .12 wide (3.0) Micro band. Optional slot for routing individual pigtail shields. Qwik-Ty strain relief arm. Aluminum with stainless steel screws and clips.

TABLE 1 SCREWLOCK OPTIONS

C
4-40 Socket Head Male Screwlocks with "C" Clips

P
4-40 Female Screwlocks (fixed, non-rotating)

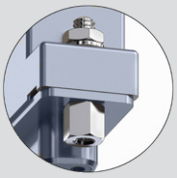

E
4-40 Extended Length Slotted Male Screwlocks with "C" clips

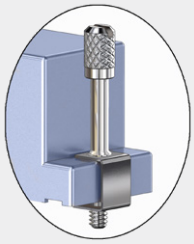

PART NUMBER

557T432 M 3 32 C K

Base P/N	**557B432** B 45° Entry **557T432** T Top Entry
Finish	**TZ** Tin-Zinc **MN** MegaNickel **JF** Cadmium, Yel. Chromate **M** Electroless Nickel **NF** Olive Drab Cadmium **MT** Nickel-PTFE **ZR** Black Zinc-Nickel
Shell Size	**1 2 3 4 5 6**
Entry Size	
Screwlocks *(Table 1)*	***Omit*** Thru-Holes *(screwlocks not included)* **C** Socket Head Male Screwlocks **E** Extended Male Screwlocks (T *top entry only)* **P** Female Screwlocks *(fixed, non-rotating)*
Band	***Omit*** No Band **K** Micro Band Included **J** Micro Slim Band Included **L** Micro-Max Band Included

Entry Size	Entry Dia.	Shell Size
16	.188 (4.8)	1-6
23	.250 (6.4)	1-6
30	.312 (7.9)	1-6
31	.375 (9.5)	1-6
32	.438 (11.1)	1-6
33	.562 (14.3)	6

BAND OPTIONS

Terminate braid to backshell with band strap and banding tool. Pre-coiled bands are passivated SST. Micro Slim bands: reduced thickness for weight reduction. Micro-Max bands:high-tension for lower-resistivity termination.

Band Type and Width	Hand Tool	Pneumatic Tool
Micro: .12 (3.0)	601-101	601-107
Micro Slim: .12 (3.0)	601-122	601-123
Micro-Max: .12 (3.0)	601-129	601-130

557-432

Low Profile Micro Band Backshell

- Solid EMI Backshell, .25" Flange
- Micro Band Shield Termination
- Qwik-Ty® Strain Relief

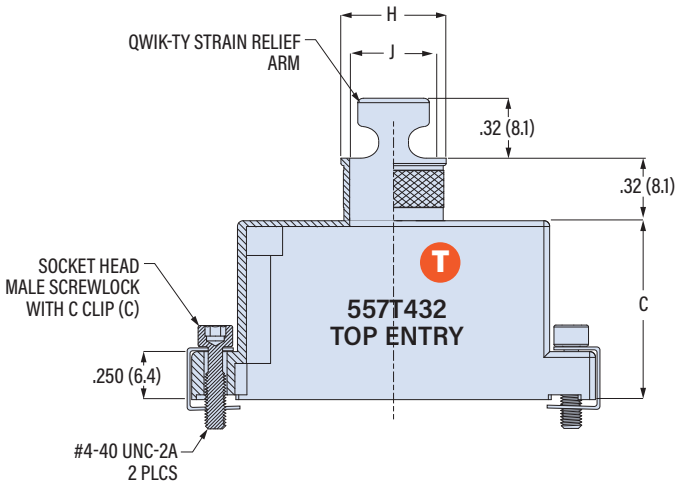

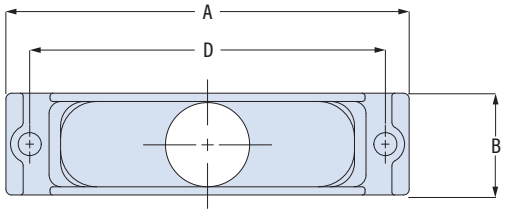

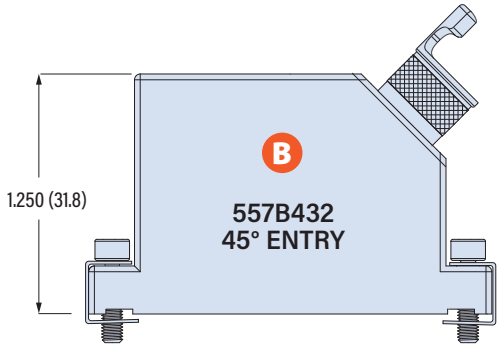

Shell Size	A Max in	A Max mm	B in	B mm	C Max in	C Max mm	D ±.005 (0.13) in	D ±.005 (0.13) mm	Max Entry Size
1	1.250	31.8	.53	13.5	.75	19.1	.984	25.0	32
2	1.580	40.1	.53	13.5	.75	19.1	1.312	33.3	32
3	2.130	54.1	.53	13.5	.93	23.6	1.852	47.0	32
4	2.770	70.4	.53	13.5	.93	23.6	2.500	63.5	32
5	2.680	68.1	.66	16.8	.93	23.6	2.406	61.1	32
6	2.770	70.4	.73	18.5	.93	23.6	2.500	63.5	33

Entry Size	ø H in	ø H mm	ø J in	ø J mm
16	.299	7.6	.188	4.8
23	.361	9.2	.250	6.4
30	.423	10.7	.312	7.9
31	.486	12.3	.375	9.5
32	.548	13.9	.438	11.1
33	.673	17.1	.562	14.3

SCREWLOCK OPTIONS

C

4-40 Socket Head Male Screwlocks with Clips

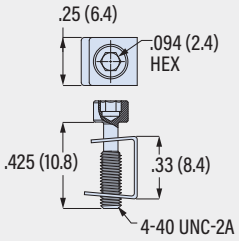

Part Number **687-236**
Order 2 per backshell

P

4-40 Female Screwlocks with Nut and Lockwasher

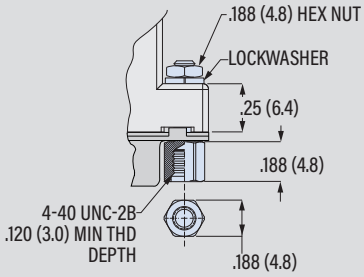

Part Number **687-178P**
Order 2 per backshell

E

4-40 Extended Length Slotted Male Screwlocks with Clips

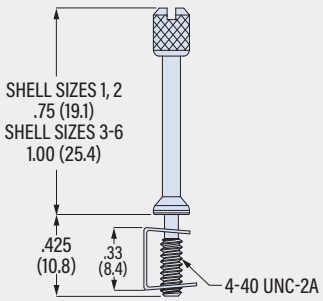

Shell Size	Length in	Length mm	Part Number
1, 2	.75	19.1	687-626-1E
3, 4, 5, 6	1.00	25.4	687-626-2E

Order 2 per backshell

© 2024 Glenair, Inc • 1211 Air Way, Glendale, CA 91201 • 818-247-6000 • www.glenair.com • U.S. CAGE code 06324 • Rectangular Accessories
Dimensions in Inches (millimeters) are subject to change without notice.

557-467
Straight Clamp Backshell

- Solid Backshell, .25" Flange
- Straight Clamp Strain Relief
- For Unshielded Cable

557-467

This accessory fits D-Subminiature M24308 connectors.
Not compatible with Series 28 HiPer-D

Straight clamp. 557-467 aluminum backshell fits M24308 D-Subminiature connectors. Use with unshielded wire bundles. Flat bars with silicone pads provide strain relief. Aluminum with stainless steel screws and clips.

TABLE 1
SCREWLOCK OPTIONS

B
4-40 Fillister Head Male Screwlocks with Clips

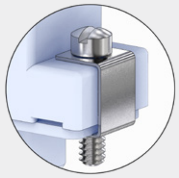

C
4-40 Socket Head Male Screwlocks with Clips

E
4-40 Extended Length Slotted Male Screwlocks with Clips

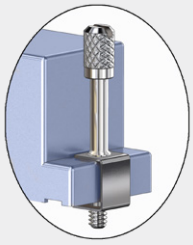

PART NUMBER

Sample PN➜ **557T467 M -2 C**

Base P/N	**557T467**
Finish	**TZ** Tin-Zinc **MN** MegaNickel **JF** Cadmium, Yel. Chromate **M** Electroless Nickel **NF** Olive Drab Cadmium **MT** Nickel-PTFE **ZR** Black Zinc-Nickel
Shell Size	**-1 -2 -3 -4 -5 -6**
Screwlocks *(Table 1)*	**B** Fillister Head Male Screwlocks **C** Socket Head Male Screwlocks **E** Extended Slotted Male Screwlocks

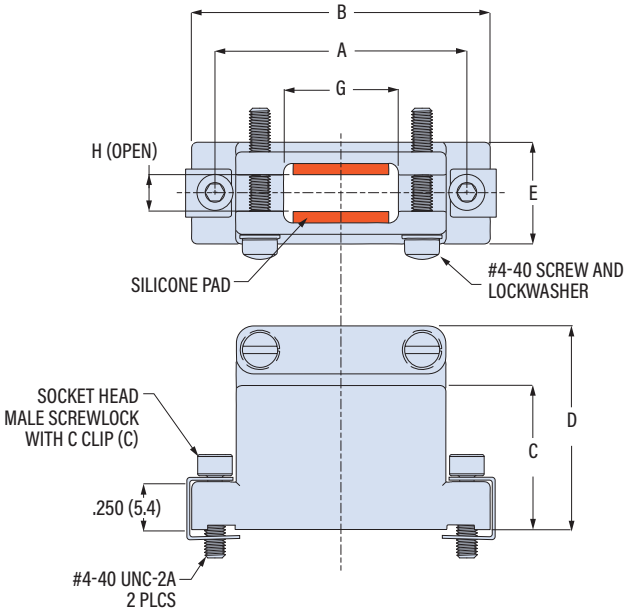

Shell Size	A ±.005 (0.13) in	A mm	B in	B mm	C in	C mm	D in	D mm	E in	E mm	F Min in	F Min mm	G Min in	G Min mm	H (open) in	H (open) mm
1	.984	25.0	1.250	31.8	.75	19.1	1.06	26.9	.53	13.5	.50	12.7	.350	8.9	.188	4.8
2	1.312	33.3	1.580	40.1	.75	19.1	1.06	26.9	.53	13.5	.50	12.7	.562	14.3	.188	4.8
3	1.852	47.0	2.100	53.3	.75	19.1	1.06	26.9	.53	13.5	.50	12.7	1.000	25.4	.188	4.8
4	2.500	63.5	2.750	69.9	1.00	25.4	1.31	33.3	.53	13.5	.68	17.3	1.625	41.3	.188	4.8
5	2.406	61.1	2.680	68.1	1.00	25.4	1.31	33.3	.66	16.8	.68	17.3	1.500	38.1	.250	6.4
6	2.500	63.5	2.740	69.6	1.00	25.4	1.31	33.3	.71	18.5	.68	17.3	1.625	41.3	.250	6.4

557-553
TAG Ring® Backshell

- Solid Backshell, .25" Flange
- TAG Ring® Shield Termination
- Saddle Clamp Strain Relief

T Top Entry

S Side Entry

E End Entry

TAG® RING

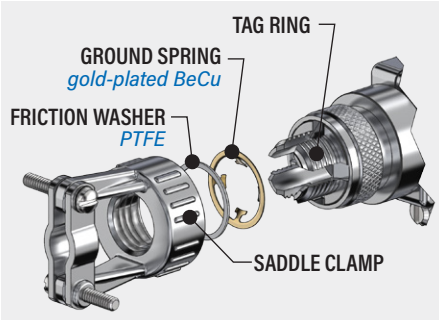

557-553

This accessory fits D-Subminiature M24308 connectors.
Not compatible with Series 28 HiPer-D

TAG Ring shield termination. 557-553 backshell fits M24308 D-Subminiature connectors. TAG ring has slots for individual wire shields. Gold-plated copper alloy spring and PTFE friction washer. Backshell body is aluminum, screws and clips are stainless steel.

TABLE 1
SCREWLOCK OPTIONS

C

4-40 Socket Head Male Screwlocks with Clips

E

4-40 Extended Length Slotted Male Screwlocks with Clips

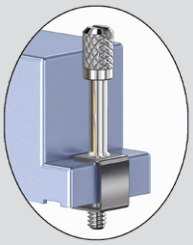

PART NUMBER

Sample PN → **557T553 M 3 F 03 C**

Base P/N

557E553	E	End Entry
557S553	S	Side Entry
557T553	T	Top Entry

Finish

TZ	Tin-Zinc
MN	MegaNickel
JF	Cadmium, Yel. Chromate
M	Electroless Nickel
NF	Olive Drab Cadmium
MT	Nickel-PTFE
ZR	Black Zinc-Nickel

Shell Size

1 2 3 4 5 6

Strain Relief

F	Saddle Clamp, Short
G	Nut
L	Saddle Clamp, Long

Entry Size

Entry Size	Cable Range Min	Cable Range Max	Shell Size
02	.125 (3.2)	.250 (6.4)	1-6
03	.250 (6.4)	.375 (9.5)	1-6
04	.250 (6.4)	.438 (11.1)	1-6
05	.375 (9.5)	.625 (15.9)	6

Screwlocks *(Table 1)*

Omit	#4-40 Tapped Holes
C	Socket Head Male Screwlocks
E	Extended Slotted Male Screwlock *(Profiles S T only)*
X	.125 (3.2) Thru-Holes *(screwlocks not included)*

© 2024 Glenair, Inc • 1211 Air Way, Glendale, CA 91201 • 818-247-6000 • www.glenair.com • U.S. CAGE code 06324 • Rectangular Accessories
Dimensions in Inches (millimeters) are subject to change without notice.

557-553
TAG Ring® Backshell

- Solid Backshell, .25" Flange
- TAG Ring® Shield Termination
- Saddle Clamp Strain Relief

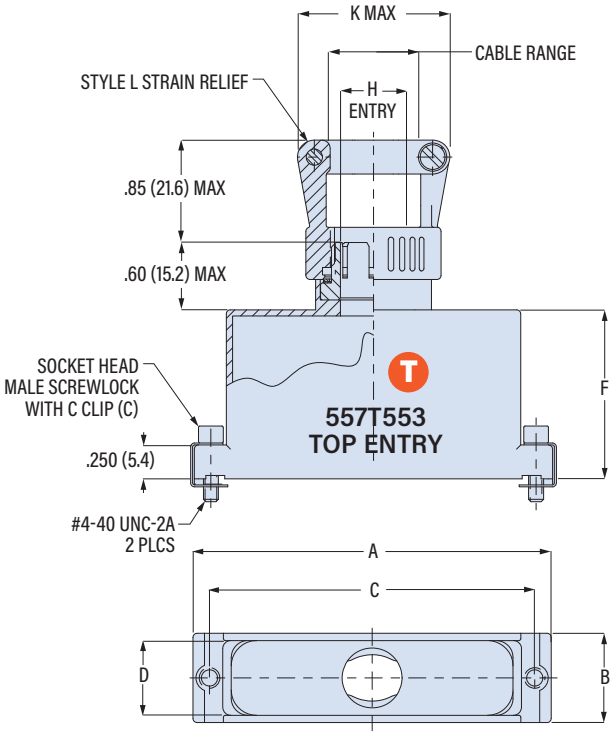

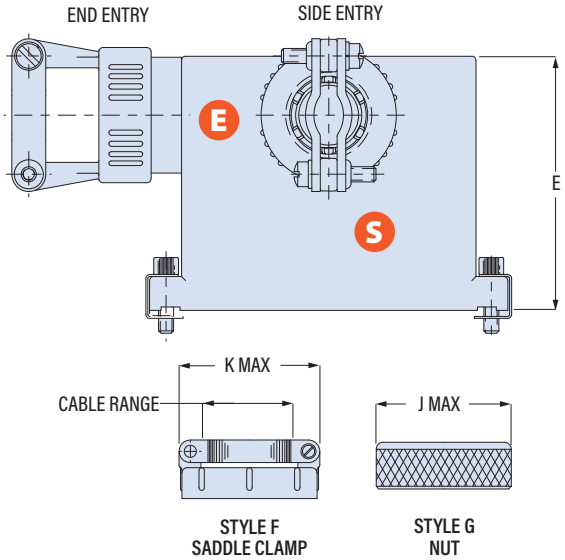

Shell Size	A Max in	A Max mm	B in	B mm	C ± .005 (0.13) in	C ± .005 (0.13) mm	D in	D mm	E in	E mm	F in	F mm	G in	G mm	Max Entry Size
1	1.25	31.8	.53	13.5	.984	25.0	.43	10.9	1.88	47.8	.75	19.1	.90	22.9	04
2	1.58	40.1	.53	13.5	1.312	33.3	.43	10.9	1.88	47.8	.75	19.1	.90	22.9	04
3	2.13	54.1	.53	13.5	1.852	47.0	.43	10.9	1.88	47.8	1.00	25.4	2.00	50.8	04
4	2.77	70.4	.53	13.5	2.500	63.5	.43	10.9	1.88	47.8	1.00	25.4	2.00	50.8	04
5	2.68	68.1	.66	16.8	2.406	61.1	.56	14.2	2.13	54.1	1.25	31.8	2.00	50.8	04
6	2.77	70.4	.73	18.5	2.500	63.5	.63	16.0	2.22	56.4	1.25	31.8	2.00	50.8	05

Entry Size	H Entry in	H Entry mm	J Max in	J Max mm	K Max in	K Max mm	Cable Range Min in	Cable Range Min mm	Cable Range Max in	Cable Range Max mm
02	.25	6.4	.55	14.0	.97	24.63	.125	3.2	.250	6.4
03	.37	9.4	.67	17.0	1.05	26.7	.250	6.4	.375	9.5
04	.50	12.7	.80	20.3	1.16	29.5	.250	6.4	.438	11.1
05	.62	15.7	.92	23.4	1.22	31.0	.375	9.5	.625	15.9

SCREWLOCK OPTIONS

C

4-40 Socket Head Male Screwlocks with Clips

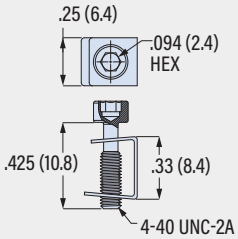

Part Number **687-236**
Order 2 per backshell

E

4-40 Extended Length Slotted Male Screwlocks with Clips

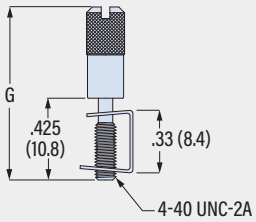

Shell Size	G Length in	G Length mm	Part Number
1, 2	.90	22.9	687-236-3
3, 4, 5	2.00	50.8	687-236-2

Order 2 per backshell

557-107
Banding Backshell, Lightweight

- Solid Backshell, .035" Flange
- Banding Shield Termination
- Lightweight Trapezoidal

557-107

This accessory fits D-Subminiature M24308 connectors.
Not compatible with Series 28 HiPer-D

Lightweight, one piece, EMI banding.
557-107 backshell fits M24308 D-Subminiature connectors. Backshell body is aluminum, screws and clips are stainless steel.

BAND OPTIONS

Terminate cable braid to backshell with optional band strap and banding tool. Pre-coiled bands are passivated stainless steel. Slim Standard bands have reduced thickness for weight reduction.

Band Type and Width	Hand Tool	Pneumatic Tool
Standard: .24 (6.1)	601-100	601-106
Slim Standard: .24 (6.1)	601-109	601-110

PART NUMBER

Sample PN → **557-107 M 3 -05 A B S**

Base P/N	**557-107**
Finish	**TZ** Tin-Zinc **MN** MegaNickel **JF** Cadmium, Yel. Chromate **M** Electroless Nickel **NF** Olive Drab Cadmium **MT** Nickel-PTFE **ZR** Black Zinc-Nickel
Shell Size	**1 2 3 4 5 6**
Entry Size	

Entry Size	Entry Dia.	Shell Size
-01	.125 (3.2)	1-6
-02	.187 (4.7)	1-6
-03	.265 (6.7)	1-6
-04	.312 (7.9)	1-6
-05	.390 (9.9)	1-6
-06	.415 (10.5)	1-6
-07	.500 (12.7)	5-6
-08	.525 (13.3)	5-6
-09	.595 (15.1)	6

Screwlocks *(Table 1)*	***Omit*** Thru-Holes *(screwlocks not included)* **A** Socket Head Male Screwlocks **C** Fillister Head Male Screwlocks **E** Extended Slotted Male Screwlocks
Band	***Omit*** No Band **B** Standard Band Included **J** Slim Standard Band Included
Slot	***Omit*** No Slot **S** Slot in Banding Area

TABLE 1 SCREWLOCK OPTIONS

A
4-40 Socket Head Male Screwlocks with Clips

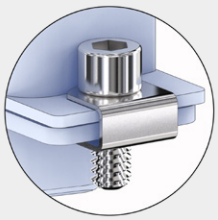

C
4-40 Fillister Hd. Male Screwlocks with Clips

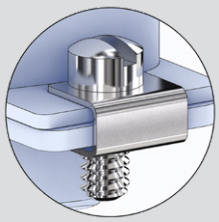

E
4-40 Extended Male Screwlocks with Clips

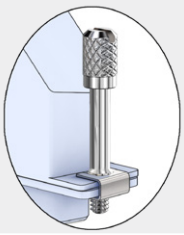

© 2024 Glenair, Inc • 1211 Air Way, Glendale, CA 91201 • 818-247-6000 • www.glenair.com • U.S. CAGE code 06324 • Rectangular Accessories
Dimensions in Inches (millimeters) are subject to change without notice.

557-107
Banding Backshell, Lightweight

- Solid Backshell, .035" Flange
- Banding Shield Termination
- Lightweight Trapezoidal

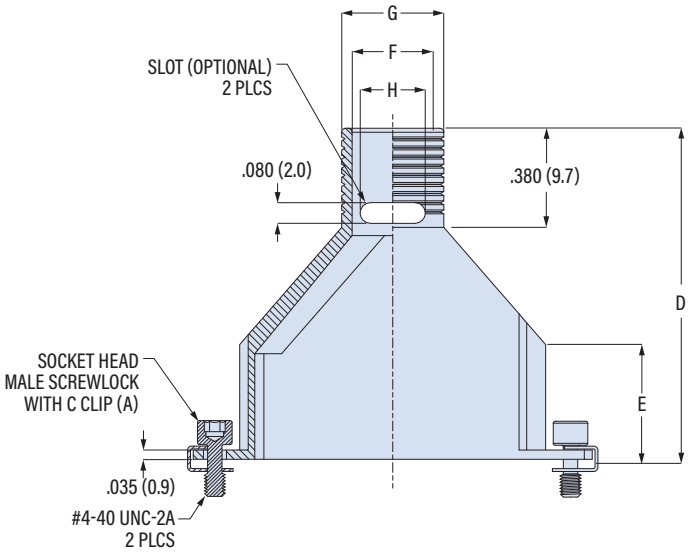

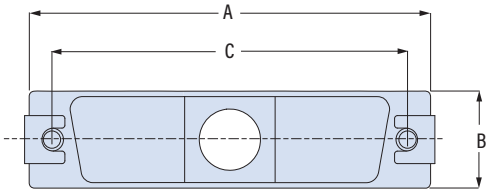

Shell Size	A Max in	A Max mm	B in	B mm	C ± .008 (0.20) in	C ± .008 (0.20) mm	D in	D mm	E in	E mm	Max Entry Size
1	1.203	30.6	.500	12.7	.984	25.0	1.190	30.2	.440	11.2	06
2	1.531	38.9	.500	12.7	1.312	33.3	1.270	32.3	.440	11.2	06
3	2.078	52.8	.500	12.7	1.852	47.0	1.550	39.4	.500	12.7	06
4	2.718	69.0	.500	12.7	2.500	63.5	1.690	42.9	.500	12.7	06
5	2.625	66.7	.609	15.5	2.406	61.1	1.670	42.4	.440	11.2	08
6	2.718	69.0	.668	17.0	2.500	63.5	1.690	42.9	.500	12.7	09

Entry Size	ø F in	ø F mm	ø G in	ø G mm	H in	H mm
01	.125	3.2	.205	5.2	.090	2.3
02	.187	4.7	.267	6.8	.190	4.8
03	.265	6.7	.360	9.1	.220	5.6
04	.312	7.9	.392	10.0	.250	6.4
05	.390	9.9	.485	12.3	.280	7.1
06	.415	10.5	.510	13.0	.310	7.9
07	.500	12.7	.580	14.7	.310	7.9
08	.525	13.3	.620	15.7	.380	9.7
09	.595	15.1	.690	17.5	.380	9.7

SCREWLOCK OPTIONS

A

4-40 Socket Head Male Screwlocks with Clips

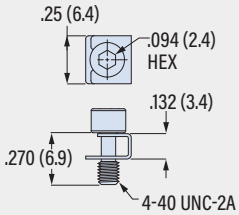

Part Number **687-316M**
Order 2 per backshell

C

4-40 Fillister Head Male Screwlocks with Clips

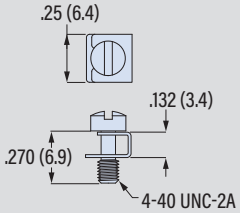

Part Number **687-316**
Order 2 per backshell

E

4-40 Extended Length Slotted Male Screwlocks with Clips

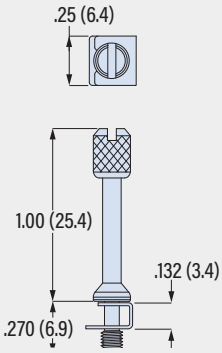

Part Number **687-316E1**
Order 2 per backshell

557-281

Banding Backshell, Micro Band

- Solid Backshell, .035" Flange
- Micro Band Shield Termination
- Lightweight Trapezoidal

557-281

This accessory fits D-Subminiature M24308 connectors.
Not compatible with Series 28 HiPer-D

Lightweight, one piece, Micro band. 557-281 trapezoidal backshell fits M24308 D-Subminiature connectors. Terminate cable shield to backshell with .12" wide Micro band. 13 entry sizes from ½ inch to 2 inches. Available in 8 heights ranging from ½ inch to 1 ⅜ inch. Backshell body is aluminum, screwlocks are stainless steel.

TABLE 1
SCREWLOCK OPTIONS

C
4-40 Socket Head Male Screwlocks with Clips

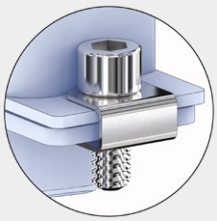

P
4-40 Female Screwlocks

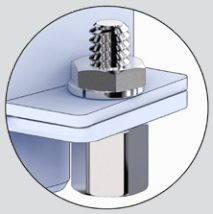

PART NUMBER

Sample PN➜ **557-281 M 3 06 A S C J**

Base P/N **557-281**

Finish

TZ	Tin-Zinc
MN	MegaNickel
JF	Cadmium, Yel. Chromate
M	Electroless Nickel
NF	Olive Drab Cadmium
MT	Nickel-PTFE
ZR	Black Zinc-Nickel

Shell Size **1 2 3 4 5 6**

Entry Size

Entry Size	H	Shell Size
04	.500 (12.7)	1-6
05	.625 (15.9)	1-6
06	.750 (19.1)	2-6
07	.875 (22.2)	2-6
08	1.000 (25.4)	2-6
09	1.125 (28.6)	3-6
10	1.250 (31.8)	3-6
11	1.375 (34.9)	3-6
12	1.500 (38.1)	3-6
13	1.625 (41.3)	4-6
14	1.750 (44.5)	4-6
15	1.875 (47.6)	4-6
16	2.000 (50.8)	4-6

Height Code

Code	J
A	.50 (12.7)
B	.62 (15.8)
C	.75 (19.1)
D	.87 (22.1)
E	1.00 (25.4)
F	1.12 (28.5)
G	1.25 (31.8)
H	1.38 (35.1)

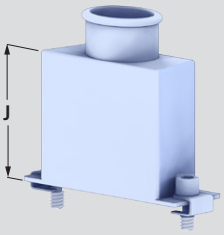

Qwik-Ty

Omit	No Qwik-Ty Arm
T	Qwik-Ty Arm Included

Screwlocks *(Table 1)*

Omit	Thru-Holes *(screwlocks not included)*
C	Socket Head Male Screwlocks
P	Female Screwlocks *(fixed, non-rotating)*

Band

Omit	No Band
K	Micro Band Included
J	Micro Slim Band Included
L	Micro-Max Band Included

© 2024 Glenair, Inc • 1211 Air Way, Glendale, CA 91201 • 818-247-6000 • www.glenair.com • U.S. CAGE code 06324 • Rectangular Accessories
Dimensions in Inches (millimeters) are subject to change without notice.

557-281
Banding Backshell, Micro Band

- Solid Backshell, .035" Flange
- Micro Band Shield Termination
- Lightweight Trapezoidal

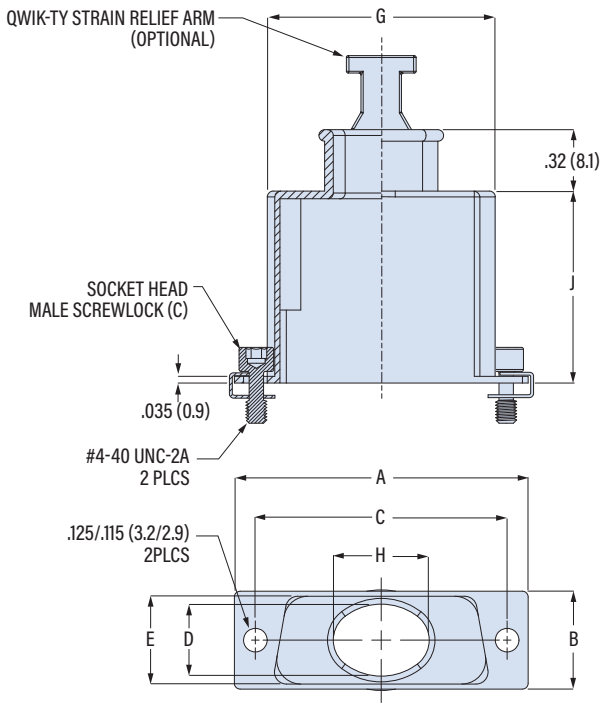

Shell Size	A in	A mm	B in	B mm	C ± .005 (0.13) in	C ± .005 (0.13) mm	D in	D mm	E in	E mm	G ± .030 (0.8) in	G ± .030 (0.8) mm	Max Entry Size
1	1.203	30.6	.500	12.7	.984	25.0	.375	9.5	.467	11.7	.839	21.3	05
2	1.531	38.9	.500	12.7	1.312	33.3	.375	9.5	.467	11.7	1.178	29.9	08
3	2.078	52.8	.500	12.7	1.852	47.0	.375	9.5	.467	11.7	1.706	43.3	12
4	2.718	69.0	.500	12.7	2.500	63.5	.375	9.5	.467	11.7	2.364	60.0	16
5	2.625	66.7	.609	15.5	2.406	61.1	.484	12.3	.579	14.7	2.291	58.2	16
6	2.780	70.6	.670	17.0	2.500	63.5	.554	14.1	.621	15.8	2.421	61.5	16

Entry Size	H in	H mm	Shell Size
04	.500	12.7	1-6
05	.625	15.9	1-6
06	.750	19.1	2-6
07	.875	22.2	2-6
08	1.000	25.4	2-6
09	1.125	28.6	3-6
10	1.250	31.8	3-6
11	1.375	34.9	3-6
12	1.500	38.1	3-6
13	1.625	41.3	4-6
14	1.750	44.5	4-6
15	1.875	47.6	4-6
16	2.000	50.8	4-6

Height Code	J in	J mm
A	.50	12.7
B	.62	15.8
C	.75	19.1
D	.87	22.1
E	1.00	25.4
F	1.12	28.5
G	1.25	31.8
H	1.38	35.1

SCREWLOCK OPTIONS

C

4-40 Socket Head Male Screwlocks with Clips

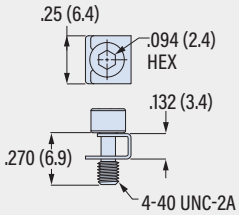

Part Number **687-316M**
Order 2 per backshell

P

4-40 Female Screwlocks (fixed, non-rotating)

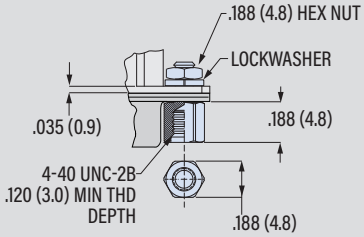

Part Number **687-180P**
Order 2 per backshell

BAND OPTIONS

Terminate cable braid to backshell with optional band strap and banding tool. Pre-coiled bands are passivated stainless steel. Micro Slim bands have reduced thickness for weight reduction. Micro-Max bands are high-tension for lower-resistivity termination.

Band Type and Width	Hand Tool	Pneumatic Tool
Micro: .12 (3.0)	601-101	601-107
Micro Slim: .12 (3.0)	601-122	601-123
Micro-Max: .12 (3.0)	601-129	601-130

557-319

Banding Backshell, 45° & End Entry

- Solid Backshell, .035" Flange
- Banding Shield Termination
- Lightweight

B 45° Entry

E End Entry

557-319

This accessory fits D-Subminiature M24308 connectors.
Not compatible with Series 28 HiPer-D

Lightweight, one piece. 557-319 backshell fits M24308 D-Subminiature connectors. Terminate cable shield to backshell with .24" wide band strap. Available in 45° or end entry. Attach cable tie to optional Qwik-Ty strain relief arm. Backshell body is aluminum, screwlocks are stainless steel.

TABLE 1
SCREWLOCK OPTIONS

A
4-40 Socket Head Male Screwlocks with Clips

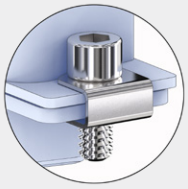

C
4-40 Fillister Hd. Male Screwlocks with Clips

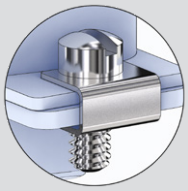

P
4-40 Female Screwlocks

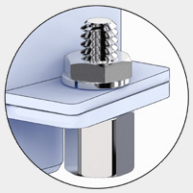

PART NUMBER

Sample PN → **557B319 M 2 04 C B -T**

Base P/N	**557B319**	B 45° Entry
	557E319	E End Entry
Finish	**TZ**	Tin-Zinc
	MN	MegaNickel
	JF	Cadmium, Yel. Chromate
	M	Electroless Nickel
	NF	Olive Drab Cadmium
	MT	Nickel-PTFE
	ZR	Black Zinc-Nickel
Shell Size	**1 2 3 4 5 6**	

Entry Size

Entry Size	E	Shell Size
01	.125 (3.2)	1-6
02	.187 (4.7)	1-6
03	.265 (6.7)	1-6
04	.312 (7.9)	1-6
05	.390 (9.9)	1-6
06	.415 (10.5)	1-6
07	.500 (12.7)	5-6
08	.525 (13.3)	5-6
09	.570 (14.5)	6

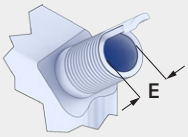

Screwlocks *(Table 1)*	*Omit*	Thru-Holes *(screwlocks not included)*
	A	Socket Head Male Screwlocks
	C	Fillister Head Male Screwlocks
	P	Female Screwlocks *(fixed, non-rotating)*
Band	*Omit*	No Band
	B	Standard Band Included
	J	Slim Standard Band Included
Qwik-Ty	*Omit*	No Qwik-Ty Strain Relief Arm
	-T	Qwik-Ty Arm Included

© 2024 Glenair, Inc • 1211 Air Way, Glendale, CA 91201 • 818-247-6000 • www.glenair.com • U.S. CAGE code 06324 • Rectangular Accessories
Dimensions in Inches (millimeters) are subject to change without notice.

557-319

Banding Backshell, 45° & End Entry

- Solid Backshell, .035" Flange
- Banding Shield Termination
- Lightweight

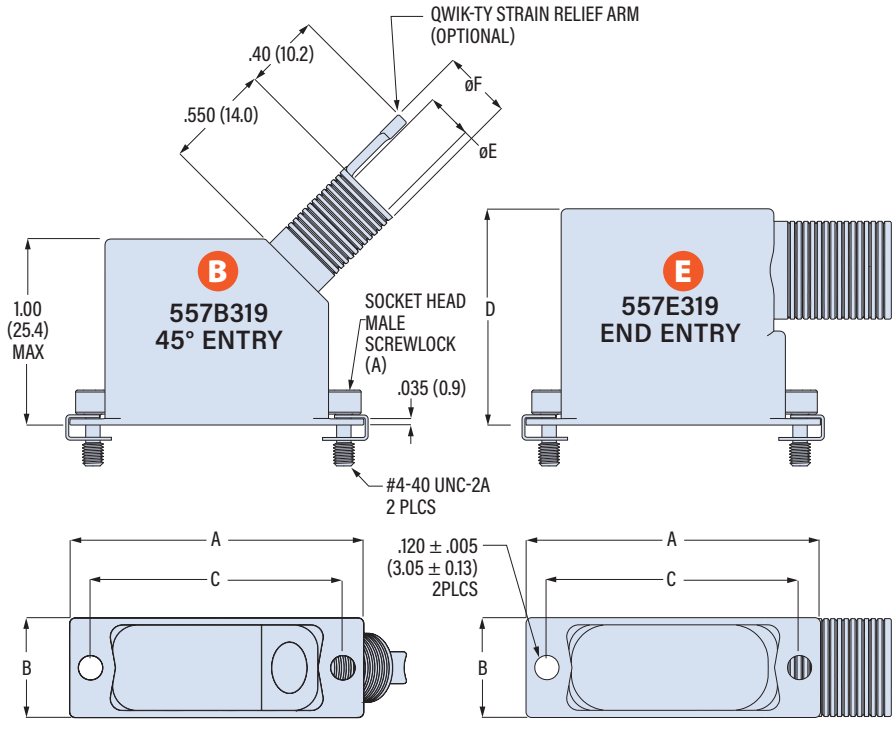

Shell Size	A in	A mm	B in	B mm	C ± .005 (0.13) in	C mm	D ± .015 (0.38) in	D mm	Max Entry Size
1	1.203	30.6	.520	13.2	.984	25.0	1.000	25.4	06
2	1.531	38.9	.520	13.2	1.312	33.3	1.125	28.6	06
3	2.078	52.8	.520	13.2	1.852	47.0	1.188	30.2	06
4	2.718	69.0	.520	13.2	2.500	63.5	1.188	30.2	06
5	2.625	66.7	.629	16.0	2.406	61.1	1.312	33.3	08
6	2.718	69.0	.690	17.5	2.500	63.5	1.312	33.3	09

Entry Size	ø E in	ø E mm	ø F in	ø F mm
01	.125	3.2	.205	5.2
02	.187	4.7	.267	6.8
03	.265	6.7	.360	9.1
04	.312	7.9	.392	10.0
05	.390	9.9	.485	12.3
06	.415	10.5	.510	13.0
07	.500	12.7	.580	14.7
08	.525	13.3	.620	15.7
09	.570	14.5	.665	16.9

BAND OPTIONS

Terminate cable braid to backshell with optional band strap and banding tool. Pre-coiled bands are passivated stainless steel. Slim Standard bands have reduced thickness for weight reduction.

Band Type and Width	Hand Tool	Pneumatic Tool
Standard: .24 (6.1)	601-100	601-106
Slim Standard: .24 (6.1)	601-109	601-110

SCREWLOCK OPTIONS

A

4-40 Socket Head Male Screwlocks with Clips

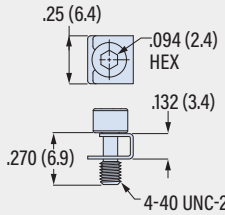

Part Number **687-316M**
Order 2 per backshell

C

4-40 Fillister Head Male Screwlocks with Clips

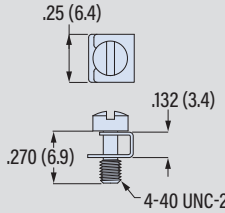

Part Number **687-316**
Order 2 per backshell

P

4-40 Female Screwlocks (fixed, non-rotating)

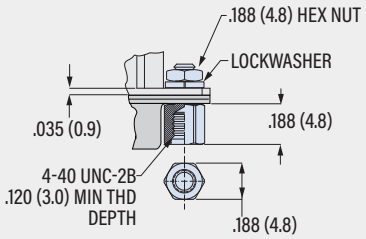

Part Number **687-180P**
Order 2 per backshell

© 2024 Glenair, Inc • 1211 Air Way, Glendale, CA 91201 • 818-247-6000 • www.glenair.com • U.S. CAGE code 06324 • Rectangular Accessories
Dimensions in Inches (millimeters) are subject to change without notice.

557-561

Banding Backshell, Micro Band, 45° & End Entry

- Solid Backshell, .035" Flange
- Micro Band Shield Termination
- Lightweight

B 45° Entry

E End Entry

557-561

This accessory fits D-Subminiature M24308 connectors.
Not compatible with Series 28 HiPer-D

Lightweight, one piece, Micro band. 557-561 backshell fits M24308 D-Subminiature connectors. Terminate cable shield to backshell with .12" wide Micro band strap. Available in 45° or end entry. Backshell body is aluminum, screwlocks are stainless steel.

TABLE 1
SCREWLOCK OPTIONS

A
4-40 Socket Head Male Screwlocks with Clips

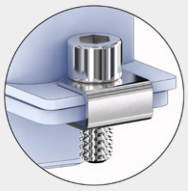

C
4-40 Fillister Hd. Male Screwlocks with Clips

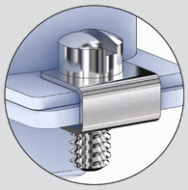

P
4-40 Female Screwlocks

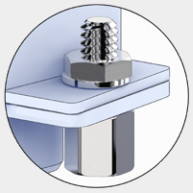

PART NUMBER

Sample PN➜ **557B561 M 2 04 C B**

Base P/N	**557B561**	B 45° Entry
	557E561	E End Entry
Finish	**TZ**	Tin-Zinc
	MN	MegaNickel
	JF	Cadmium, Yel. Chromate
	M	Electroless Nickel
	NF	Olive Drab Cadmium
	MT	Nickel-PTFE
	ZR	Black Zinc-Nickel
Shell Size	**1 2 3 4 5 6**	

Entry Size

Entry Size	E	Shell Size
01	.125 (3.2)	1-6
02	.187 (4.7)	1-6
03	.265 (6.7)	1-6
04	.312 (7.9)	1-6
05	.390 (9.9)	1-6
06	.415 (10.5)	1-6
07	.500 (12.7)	5-6
08	.525 (13.3)	5-6
09	.570 (14.5)	6

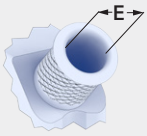

Screwlocks *(Table 1)*	*Omit*	Thru-Holes *(screwlocks not included)*
	A	Socket Head Male Screwlocks
	C	Fillister Head Male Screwlocks
	P	Female Screwlocks *(fixed, non-rotating)*
Band	*Omit*	No Band
	K	Micro Band Included
	J	Micro Slim Band Included
	L	Micro-Max Band Included

© 2024 Glenair, Inc • 1211 Air Way, Glendale, CA 91201 • 818-247-6000 • www.glenair.com • U.S. CAGE code 06324 • Rectangular Accessories
Dimensions in Inches (millimeters) are subject to change without notice.

557-561

Banding Backshell, Micro Band, 45° & End Entry

- Solid Backshell, .035" Flange
- Micro Band Shield Termination
- Lightweight

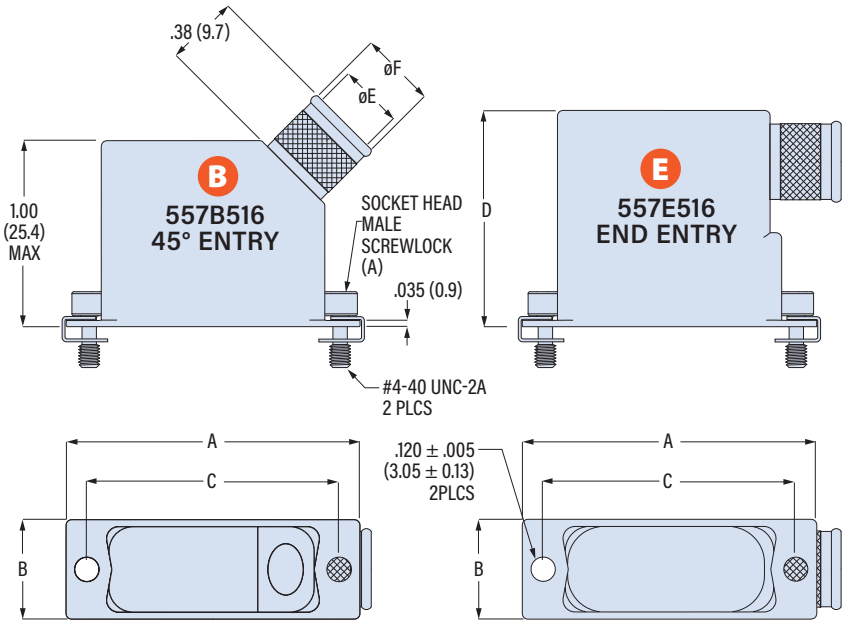

Shell Size	A in	A mm	B in	B mm	C ± .005 (0.13) in	C ± .005 (0.13) mm	D ± .015 (0.38) in	D ± .015 (0.38) mm	Max Entry Size
1	1.203	30.6	.520	13.2	.984	25.0	1.000	25.4	06
2	1.531	38.9	.520	13.2	1.312	33.3	1.125	28.6	06
3	2.078	52.8	.520	13.2	1.852	47.0	1.188	30.2	06
4	2.718	69.0	.520	13.2	2.500	63.5	1.188	30.2	06
5	2.625	66.7	.629	16.0	2.406	61.1	1.312	33.3	08
6	2.718	69.0	.690	17.5	2.500	63.5	1.312	33.3	09

Entry Size	ø E in	ø E mm	ø F in	ø F mm
01	.125	3.2	.205	5.2
02	.187	4.7	.267	6.8
03	.265	6.7	.360	9.1
04	.312	7.9	.392	10.0
05	.390	9.9	.485	12.3
06	.415	10.5	.510	13.0
07	.500	12.7	.580	14.7
08	.525	13.3	.620	15.7
09	.570	14.5	.665	16.9

BAND OPTIONS

Terminate cable braid to backshell with optional band strap and banding tool. Pre-coiled bands are passivated stainless steel. Micro Slim bands have reduced thickness for weight reduction. Micro-Max bands are high-tension for lower-resistivity termination.

Band Type and Width	Hand Tool	Pneumatic Tool
Micro: .12 (3.0)	601-101	601-107
Micro Slim: .12 (3.0)	601-122	601-123
Micro-Max: .12 (3.0)	601-129	601-118

SCREWLOCK OPTIONS

A

4-40 Socket Head Male Screwlocks with Clips

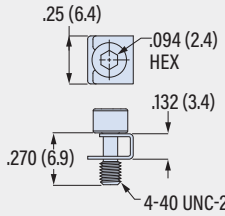

Part Number **687-316M**
Order 2 per backshell

C

4-40 Fillister Head Male Screwlocks with Clips

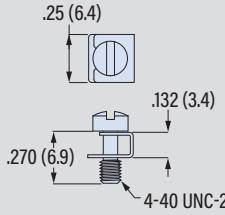

Part Number **687-316**
Order 2 per backshell

P

4-40 Female Screwlocks (fixed, non-rotating)

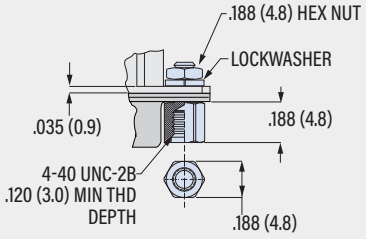

Part Number **687-180P**
Order 2 per backshell

289-005

Banding Backshell, HiPer-D

- Split EMI Backshell
- Banding Shield Termination
- For Series 28 HiPer-D with Groove

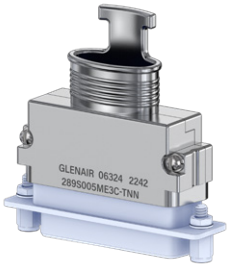

T Top Entry

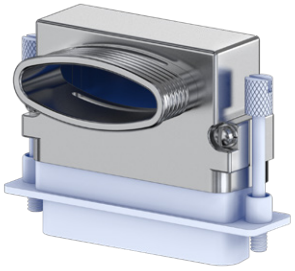

S Side Entry

Lightweight, low profile space-saving two piece backshell fits HiPer-D® connectors with backshell groove (280-018P, 280-019S, 280-046P, 280-047S). Terminate cable shield with optional clamping band. Elliptical cable entry provides room for large wire bundles. Non-environmental. Aluminum alloy, passivated stainless steel hardware.

289-005

This accessory fits HiPer-D connectors with backshell groove.

TABLE 1
ENTRY SIZE

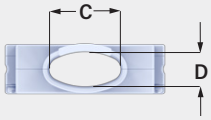

Shell Size	Entry Size	C in	C mm	D in	D mm
1	A	.143	3.6	.143	3.6
	B	.195	5.0	.195	5.0
	C	.242	6.2	.242	6.2
	D	.438	11.1	.375	9.5
	E	.638	16.2	.375	9.5
2	A	.188	4.8	.188	4.8
	B	.256	6.5	.256	6.5
	C	.480	12.2	.375	9.5
	D	.688	17.5	.375	9.5
	E	.969	24.6	.375	9.5
3	A	.245	6.2	.245	6.2
	B	.550	14.0	.375	9.5
	C	.780	19.8	.375	9.5
	D	1.125	28.6	.375	9.5
	E	1.484	37.7	.375	9.5
4	A	.291	7.4	.291	7.4
	B	.800	20.3	.375	9.5
	C	1.260	32.0	.375	9.5
	D	1.813	46.1	.375	9.5
	E	2.155	54.7	.375	9.5
5	A	.326	8.3	.326	8.3
	B	.770	19.6	.485	12.3
	C	1.250	31.8	.485	12.3
	D	1.750	44.5	.485	12.3
	E	2.031	51.6	.485	12.3
6	A	.376	9.6	.376	9.6
	B	.863	21.9	.550	14.0
	C	1.323	33.6	.550	14.0
	D	1.875	47.6	.550	14.0
	E	2.165	55.0	.550	14.0

PART NUMBER

Sample PN➜ **289T005 ME 3 A T S K**

Base P/N	**289T005** T Top Entry **289S005** S Side Entry
Finish	**TZ** Tin-Zinc **MN** MegaNickel **JF** Cadmium, Yel. Chromate **M** Electroless Nickel **NF** Olive Drab Cadmium **MT** Nickel-PTFE **ZR** Black Zinc-Nickel
Shell Size	**1 2 3 4 5 6**
Entry Size	**A B C D E** *See Table 1*
Qwik-Ty	**N** No Qwik-Ty Strain Relief Arm **T** Qwik-Ty Arm Included
Slots	**N** No Slots **S** Slots in Banding Area
Band	***Omit*** No Band **K** Standard Band Included **J** Slim Standard Band Included
Entry Direction	*Applies to 289S005 Side Entry* *Omit for 289T005 Top Entry* **1** Direction 1 **2** Direction 2

Direction 1

Direction 2

© 2024 Glenair, Inc • 1211 Air Way, Glendale, CA 91201 • 818-247-6000 • www.glenair.com • U.S. CAGE code 06324 • Rectangular Accessories
Dimensions in Inches (millimeters) are subject to change without notice.

289-005
Banding Backshell, HiPer-D

- Split EMI Backshell
- Banding Shield Termination
- For Series 28 HiPer-D with Groove

289T005 TOP ENTRY

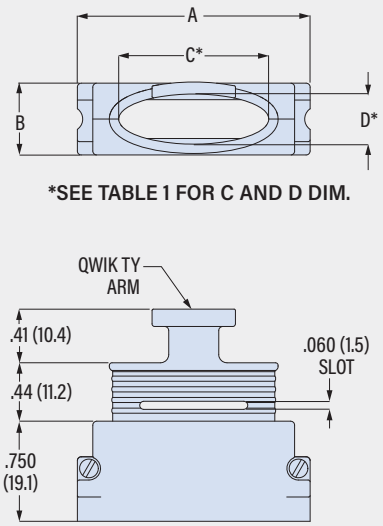

*SEE TABLE 1 FOR C AND D DIM.

Shell Size	A Max in	A Max mm	B Max in	B Max mm
1	.894	22.7	.550	14.0
2	1.218	30.9	.550	14.0
3	1.760	44.7	.550	14.0
4	2.408	61.2	.550	14.0
5	2.297	58.3	.654	16.6
6	2.422	61.5	.716	18.2

289S005 SIDE ENTRY

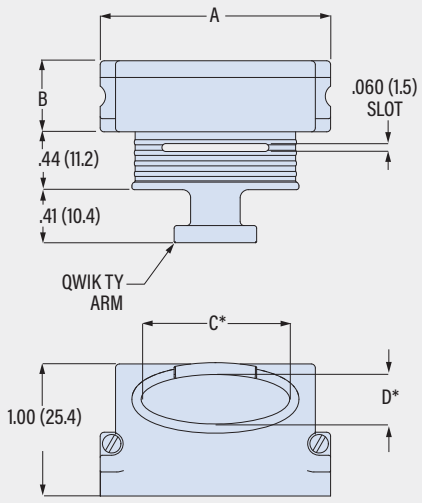

*SEE TABLE 1 FOR C AND D DIM.

Shell Size	A Max in	A Max mm	B Max in	B Max mm
1	.894	22.7	.550	14.0
2	1.218	30.9	.550	14.0
3	1.760	44.7	.550	14.0
4	2.408	61.2	.550	14.0
5	2.297	58.3	.654	16.6
6	2.422	61.5	.716	18.2

BAND OPTIONS

Terminate cable braid to backshell with optional band strap and banding tool. Pre-coiled bands are passivated stainless steel. Slim Standard bands have reduced thickness for weight reduction.

Band Type and Width	Hand Tool	Pneumatic Tool
Standard: .24 (6.1)	601-100	601-106
Slim Standard: .24 (6.1)	601-109	601-110

289-007

Panel Mount Banding Backshell, HiPer-D

- EMI Backshell
- Banding Shield Termination
- For Panel Mount Series 28 HiPer-D

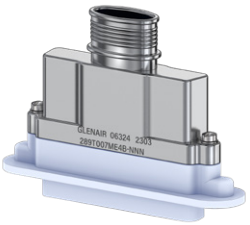

T Top Entry

B 45° Entry

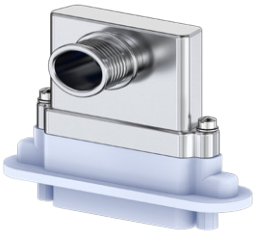

S Side Entry

Lightweight banding adapter fits HiPer-D® panel mount connectors with threaded accessory mounting holes (280-020, 280-021, 280-048, 280-049). Environmentally protected with gasket. Terminate cable shield with optional Band-Master® ATS clamping band. Elliptical cable entry provides room for large wire bundles. Compatible with Glenair Series 77 lipped heat-shrink boots. Aluminum alloy, stainless steel screws and washers, fluorosilicone gasket.

289-007

This accessory fits HiPer-D panel mount connectors:
280-020, 280-021, 280 -048, 280-049

TABLE 1
ENTRY SIZE

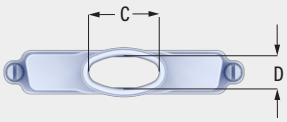

Shell Size	Entry Size	C in	C mm	D in	D mm
1	A	.143	3.6	.143	3.6
	B	.195	5.0	.195	5.0
	C	.242	6.2	.242	6.2
	D	.438	11.1	.375	9.5
	E	.625	15.9	.375	9.5
2	A	.188	4.8	.188	4.8
	B	.256	6.5	.256	6.5
	C	.480	12.2	.375	9.5
	D	.688	17.5	.375	9.5
	E	.938	23.8	.375	9.5
3	A	.245	6.2	.245	6.2
	B	.550	14.0	.375	9.5
	C	.780	19.8	.375	9.5
	D	1.125	28.6	.375	9.5
	E	1.438	36.5	.375	9.5
4	A	.291	7.4	.291	7.4
	B	.800	20.3	.375	9.5
	C	1.260	32.0	.375	9.5
	D	1.813	46.1	.375	9.5
	E	2.125	54.0	.375	9.5
5	A	.326	8.3	.326	8.3
	B	.770	19.6	.485	12.3
	C	1.250	31.8	.485	12.3
	D	1.750	44.5	.485	12.3
	E	2.00	50.8	.485	12.3
6	A	.376	9.6	.376	9.6
	B	.863	21.9	.550	14.0
	C	1.323	33.6	.550	14.0
	D	1.875	47.6	.550	14.0
	E	2.125	54.0	.550	14.0

PART NUMBER

Sample PN➜ **289T007 ME 4 D T S K**

Base P/N
- **289T007** T Top Entry
- **289S007** S Side Entry
- **289B007** B 45° Entry

Finish
- **TZ** Tin-Zinc
- **MN** MegaNickel
- **JF** Cadmium, Yel. Chromate
- **M** Electroless Nickel
- **NF** Olive Drab Cadmium
- **MT** Nickel-PTFE
- **ZR** Black Zinc-Nickel

Shell Size **1 2 3 4 5 6**

Entry Size **A B C D E** *See Table 1*

Qwik-Ty
- **N** No Qwik-Ty Strain Relief Arm
- **T** Qwik-Ty Arm Included

Slots
- **N** No Slots
- **S** Slots in Banding Area

Band
- ***Omit*** No Band
- **K** Standard Band Included
- **J** Slim Standard Band Included

Entry Direction
Applies to 289S005 Side Entry
Omit for 289T005 Top Entry
- **1** Direction 1
- **2** Direction 2

Direction 1

Direction 2

© 2024 Glenair, Inc • 1211 Air Way, Glendale, CA 91201 • 818-247-6000 • www.glenair.com • U.S. CAGE code 06324 • Rectangular Accessories
Dimensions in Inches (millimeters) are subject to change without notice.

289-007

Panel Mount Banding Backshell, HiPer-D

- EMI Backshell
- Banding Shield Termination
- For Panel Mount Series 28 HiPer-D

289T007 TOP ENTRY

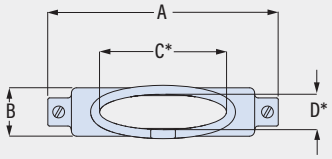

*SEE TABLE 1 FOR C AND D DIM.

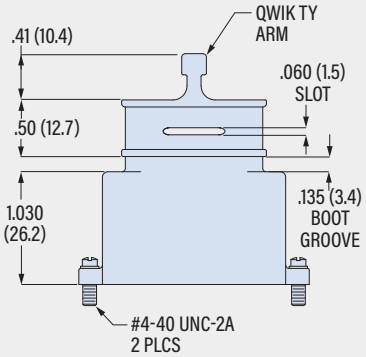

Shell Size	A Max in	A Max mm	B Max in	B Max mm
1	1.244	31.6	.526	13.4
2	1.572	39.9	.526	13.4
3	2.112	53.6	.526	13.4
4	2.760	70.1	.526	13.4
5	2.666	67.7	.628	16.0
6	2.760	70.1	.690	17.5

289S007 SIDE ENTRY

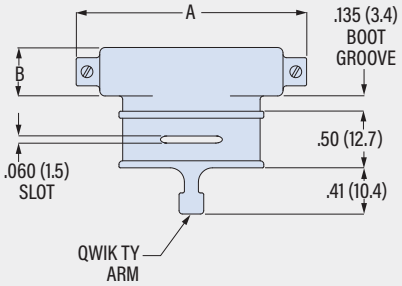

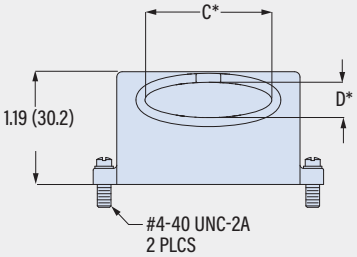

*SEE TABLE 1 FOR C AND D DIM.

Shell Size	A Max in	A Max mm	B Max in	B Max mm
1	1.244	31.6	.526	13.4
2	1.572	39.9	.526	13.4
3	2.112	53.6	.526	13.4
4	2.760	70.1	.526	13.4
5	2.666	67.7	.628	16.0
6	2.760	70.1	.690	17.5

289B007 45° ENTRY

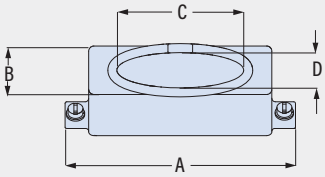

*SEE TABLE 1 FOR C AND D DIM.

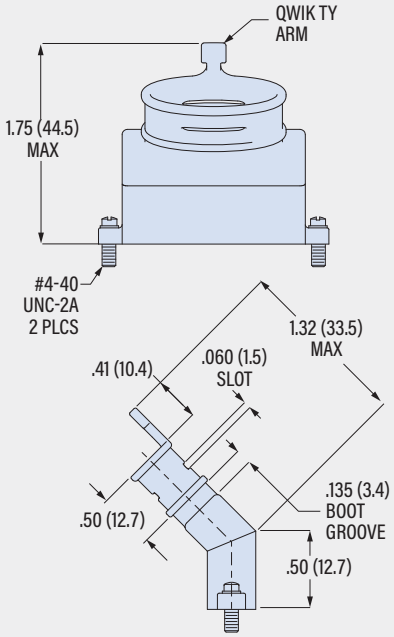

Shell Size	A Max in	A Max mm	B Max in	B Max mm
1	1.244	31.6	.526	13.4
2	1.572	39.9	.526	13.4
3	2.112	53.6	.526	13.4
4	2.760	70.1	.526	13.4
5	2.666	67.7	.628	16.0
6	2.760	70.1	.690	17.5

BAND OPTIONS

Terminate cable braid to backshell with optional band strap and banding tool. Pre-coiled bands are passivated stainless steel. Slim Standard bands have reduced thickness for weight reduction.

Band Type and Width	Hand Tool	Pneumatic Tool
Standard: .24 (6.1)	601-100	601-106
Slim Standard: .24 (6.1)	601-109	601-110

289-008

Banding Backshell, HiPer-D

- Solid Backshell
- Banding Shield Termination
- Environmental

T Top Entry

S Side Entry

Lightweight, one piece, banding. 289-008 backshell fits M24308 D-Subminiature and Series 28 HiPer-D connectors. Internal gasket provides environmental protection when used with Series 28 connector and boot. Heatshrink boot groove accepts lipped Series 77 lipped boots. Terminate cable shield to backshell with .24" wide banding strap. Available in top or side entry. Aluminum with passivated stainless steel screwlocks and clips. Fluorosilicone gasket.

289-008

This accessory fits HiPer-D and D-Subminiature M24308 connectors.

TABLE 1
ENTRY SIZE

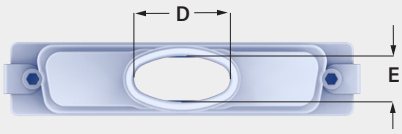

Shell Size	Entry Size	D in	D mm	E in	E mm
1	A	.143	3.6	.143	3.6
	B	.195	5.0	.195	5.0
	C	.242	6.2	.242	6.2
	D	.438	11.1	.375	9.5
	E	.638	16.2	.375	9.5
2	A	.188	4.8	.188	4.8
	B	.256	6.5	.256	6.5
	C	.480	12.2	.375	9.5
	D	.688	17.5	.375	9.5
	E	.969	24.6	.375	9.5
3	A	.245	6.2	.245	6.2
	B	.550	14.0	.375	9.5
	C	.780	19.8	.375	9.5
	D	1.125	28.6	.375	9.5
	E	1.484	37.7	.375	9.5
4	A	.291	7.4	.291	7.4
	B	.800	20.3	.375	9.5
	C	1.260	32.0	.375	9.5
	D	1.813	46.1	.375	9.5
	E	2.155	54.7	.375	9.5
5	A	.326	8.3	.326	8.3
	B	.770	19.6	.485	12.3
	C	1.250	31.8	.485	12.3
	D	1.750	44.5	.485	12.3
	E	2.031	51.6	.485	12.3
6	A	.376	9.6	.376	9.6
	B	.863	21.9	.550	14.0
	C	1.323	33.6	.550	14.0
	D	1.875	47.6	.550	14.0
	E	2.165	55.0	.550	14.0

PART NUMBER

Sample PN➜ **289T008 ME 3 A T S K**

Base P/N	**289T008** T Top Entry **289S008** S Side Entry
Finish	**TZ** Tin-Zinc **MN** MegaNickel **JF** Cadmium, Yel. Chromate **M** Electroless Nickel **NF** Olive Drab Cadmium **MT** Nickel-PTFE **ZR** Black Zinc-Nickel
Shell Size	**1 2 3 4 5 6**
Entry Size	**A B C D E** *See Table 1*
Qwik-Ty	**N** No Qwik-Ty Strain Relief Arm **T** Qwik-Ty Arm Included
Slots	**N** No Slots **S** Slots in Banding Area
Band	***Omit*** No Band **K** Standard Band Included **J** Slim Standard Band Included
Entry Direction	*Applies to 289S008 Side Entry* *Omit for 289T008 Top Entry* **1** Direction 1 **2** Direction 2
Screwlocks	***Omit*** Socket Head Male Screwlocks **T** Extended Slot Head Male Screwlocks *Entry Sizes ABCD only* **W** Socket Head Male Screwlocks with Safety Wire Holes **N** Through Holes, No Screwlocks

Direction 1

Direction 2

© 2024 Glenair, Inc • 1211 Air Way, Glendale, CA 91201 • 818-247-6000 • www.glenair.com • U.S. CAGE code 06324 • Rectangular Accessories
Dimensions in Inches (millimeters) are subject to change without notice.

289-008

Banding Backshell, HiPer-D

- Solid Backshell
- Banding Shield Termination
- Environmental

289T008 TOP ENTRY

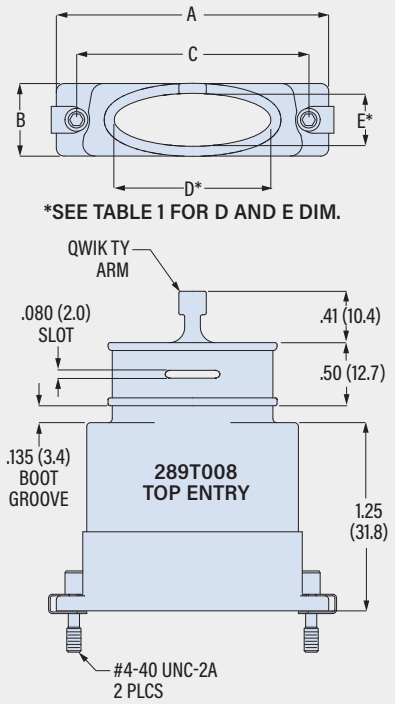

Shell Size	A Max in	A Max mm	B Max in	B Max mm	C in	C mm
1	1.395	35.4	.624	15.9	.984	25.0
2	1.706	43.3	.624	15.9	1.312	33.3
3	2.265	57.5	.624	15.9	1.852	47.0
4	2.900	73.7	.624	15.9	2.500	63.5
5	2.800	71.1	.750	19.1	2.406	61.1
6	2.900	73.7	.844	21.4	2.500	63.5

289S008 SIDE ENTRY

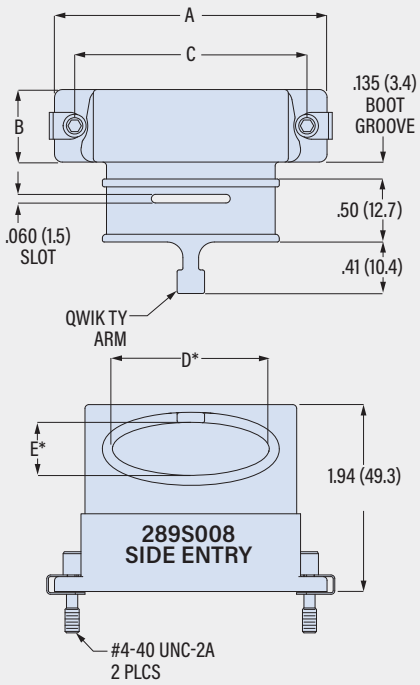

*SEE TABLE 1 FOR D AND E DIM.

Shell Size	A Max in	A Max mm	B Max in	B Max mm	C in	C mm
1	1.395	35.4	.624	15.9	.984	25.0
2	1.706	43.3	.624	15.9	1.312	33.3
3	2.265	57.5	.624	15.9	1.852	47.0
4	2.900	73.7	.624	15.9	2.500	63.5
5	2.800	71.1	.750	19.1	2.406	61.1
6	2.900	73.7	.844	21.4	2.500	63.5

SCREWLOCK OPTIONS

No Designator

4-40 Socket Head Male Jackscrews with Clips

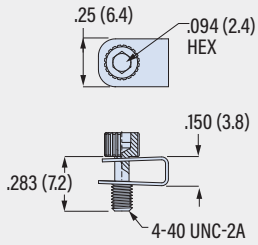

Part Number **289-092**
Order 1 per backshell

W

4-40 Socket Head Male Jackscrews with Safety Wire Hole. Clips are included.

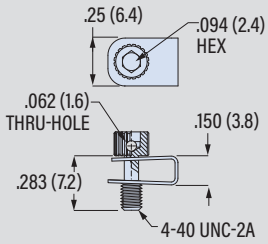

T

4-40 Extended Length Slotted Male Screwlocks With Clips

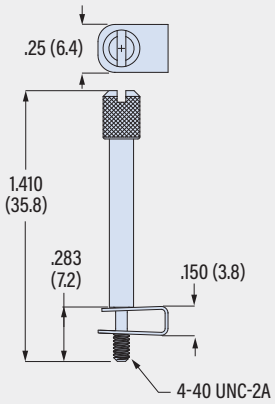

Part Number **289-068Z1**
Order 1 per backshell

BAND OPTIONS

Terminate cable braid to backshell with optional band strap and banding tool. Pre-coiled bands are passivated stainless steel. Slim Standard bands have reduced thickness for weight reduction.

Band Type and Width	Hand Tool	Pneumatic Tool
Standard: .24 (6.1)	601-100	601-106
Slim Standard: .24 (6.1)	601-109	601-110

289-085

EMI Backshell, Solid

- Solid Backshell
- Cone-and-Ring Shield Termination
- Saddle Clamp Strain Relief

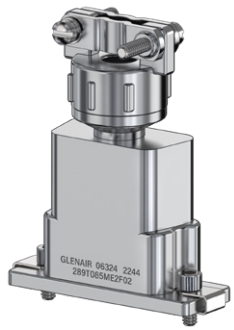

289-085

This accessory fits HiPer-D and D-Subminiature M24308 connectors.

EMI, one piece, saddle clamp. 289-085 backshell fits M24308 D-Subminiature and Series 28 HiPer-D connectors. Shielded backshell has grounding ring and saddle clamp strain relief. Connector flange is fully recessed into backshell. Aluminum with passivated stainless steel hardware.

CONE-AND-RING SHIELD TERMINATION

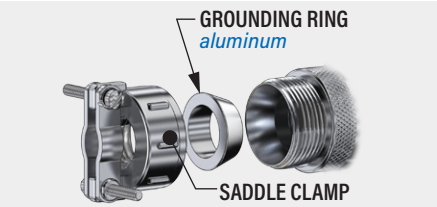

Shell Size	A Max in	A Max mm	B Max in	B Max mm	C in	C mm	Max Entry Size
1	1.395	35.4	.624	15.9	.984	25.0	04
2	1.706	43.3	.624	15.9	1.312	33.3	06
3	2.265	57.5	.624	15.9	1.852	47.0	08
4	2.900	73.7	.624	15.9	2.500	63.5	08
5	2.800	71.1	.750	19.1	2.406	61.1	08
6	2.900	73.7	.844	21.4	2.500	63.5	08

PART NUMBER

Sample PN➜ **289T085 ME 3 F 05**

Base P/N — **289T085**

Finish
- **TZ** Tin-Zinc
- **MN** MegaNickel
- **JF** Cadmium, Yel. Chromate
- **M** Electroless Nickel
- **NF** Olive Drab Cadmium
- **MT** Nickel-PTFE
- **ZR** Black Zinc-Nickel

Shell Size — **1 2 3 4 5 6**

Strain Relief — **F** Saddle Clamp

Entry Size

Entry Size	Cable Range Min	Cable Range Max	Shell Size
02	.125 (3.2)	.250 (6.4)	1-6
03	.250 (6.4)	.375 (9.5)	1-6
04	.312 (7.9)	.500 (12.7)	1-6
05	.437 (11.1)	.625 (15.9)	2-6
06	.562 (14.3)	.750 (19.1)	2-6
07	.687 (17.4)	.875 (22.2)	6
08	.812 (20.6)	1.000 (25.4)	6

Screwlocks
- ***Omit*** Socket Head Male Screwlocks
- **P** Female Screwlocks

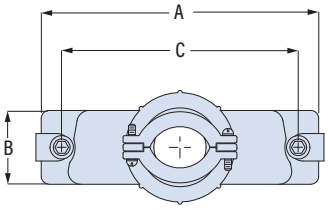

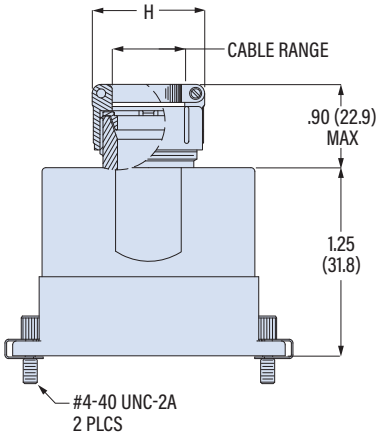

SCREWLOCK OPTIONS

No Designator: 4-40 Socket Head Male Jackscrews with Clips

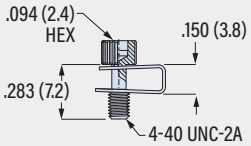

Part Number **289-092**
Order 1 per backshell

P 4-40 Female Screwlocks

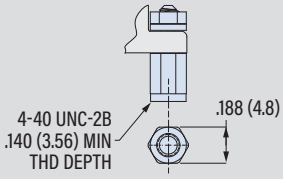

Part Number **289-015-A**
Order 1 per backshell

© 2024 Glenair, Inc • 1211 Air Way, Glendale, CA 91201 • 818-247-6000 • www.glenair.com • U.S. CAGE code 06324 • Rectangular Accessories
Dimensions in Inches (millimeters) are subject to change without notice.

289-087

EMI Backshell, HiPer-D, Split Piggyback

- Split Backshell, HiPer-D
- Micro Band Shield Termination
- 60° Entry

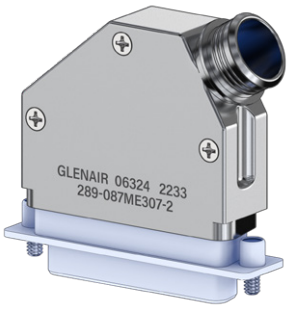

EMI, Micro band, lightweight, 60° entry, HiPer-D piggyback. Lightweight, low profile two piece backshell fits HiPer-D® connectors with backshell groove (280-018P, 280-019S, 280-046P, 280-047S). Terminate cable shield with optional .12" width Micro band. Compatible with Glenair Series 77 lipped heat-shrink boots. Non-environmental. Backshell has 60° cable entry angle and large diameter banding porch for large wire bundles. Aluminum with passivated stainless steel screws.

289-087

This accessory fits HiPer-D connectors with backshell groove.
280-018P, 280-019S, 280-046P, 280-047S

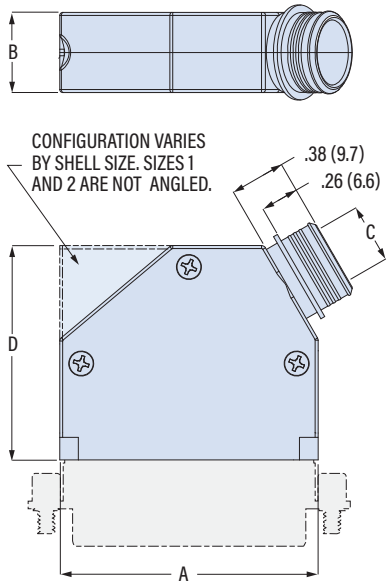

DIRECTION 1 DIRECTION 2

Shell Size	A Max in	A Max mm	B Max in	B Max mm	Max Entry Size
1	.894	22.7	.550	14.0	10
2	1.218	30.9	.550	14.0	12
3	1.760	44.7	.550	14.0	16
4	2.408	61.2	.550	14.0	18
5	2.297	58.3	.654	16.6	18
6	2.422	61.5	.716	18.2	18

PART NUMBER

Sample PN➜ **289-087 MT 5 10 -1 K T**

Base P/N — **289-087**

Finish
- **TZ** Tin-Zinc
- **MN** MegaNickel
- **JF** Cadmium, Yel. Chromate
- **M** Electroless Nickel
- **NF** Olive Drab Cadmium
- **MT** Nickel-PTFE
- **ZR** Black Zinc-Nickel

Shell Size — **1 2 3 4 5 6**

Entry Size

Entry Size	C Diameter	Shell Size
04	.250 (6.4)	1-6
05	.312 (7.9)	1-6
06	.375 (9.5)	1-6
07	.438 (11.1)	1-6
08	.500 (12.7)	1-6
10	.625 (15.9)	1-6
12	.750 (19.1)	2-6
14	.875 (22.2)	3-6
16	1.000 (25.4)	3-6
18	1.125 (28.6)	4-6

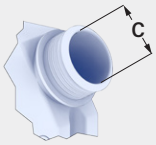

Entry Direction
- **-1** Direction 1
- **-2** Direction 2

Direction 1 *Direction 2*

Band
- ***Omit*** No Band
- **K** Micro Band Included
- **J** Micro Slim Band Included
- **L** Micro-Max Band Included

Shrink Boot
- ***Omit*** No Heatshrink Boot
- **T** Heatshrink Boot Included

Entry Size	C Max in	C Max mm	D Max in	D Max mm	Shell Size	Shrink Boot
04	.250	6.4	1.330	33.8	1-6	809S060-1H
05	.312	7.9	1.380	35.1	1-6	809S060-2H
06	.375	9.5	1.430	36.3	1-6	809S060-2H
07	.438	11.1	1.480	37.6	1-6	809S060-2H
08	.500	12.7	1.530	38.9	1-6	809S060-3H
10	.625	15.9	1.680	42.7	1-6	809S060-3H
12	.750	19.1	1.780	45.2	2-6	809S060-4H
14	.875	22.2	1.880	47.8	3-6	809S060-5H
16	1.000	25.4	1.980	50.3	3-6	809S060-5H
18	1.125	28.6	2.080	52.8	4-6	809S060-6H

BAND OPTIONS

Terminate cable braid to backshell with optional band strap and banding tool. Pre-coiled bands are passivated stainless steel. Micro Slim bands have reduced thickness for weight reduction. Micro-Max bands are high-tension for lower-resistivity termination.

Band Type and Width	Hand Tool	Pneumatic Tool
Micro: .12 (3.0)	601-101	601-107
Micro Slim: .12 (3.0)	601-122	601-123
Micro-Max: .12 (3.0)	601-129	601-118

AEROSPACE-GRADE
FOR QPL MIL-DTL-83513 AND GLENAIR SIGNATURE MICRO-D CONNECTORS

Backshells

M83513 Micro-D connector backshells and accessories—the world's most complete selection, all with available same-day delivery

Special-formula rubber covers for silent, non-abrasive performance

The MIL-DTL-83513 is the go-to connector for high-performance commercial and military aerospace applications. From satellites to miniaturized avionic equipment, the Micro-D is recognized worldwide for its high-reliability, life-of-system durability, and SWaP. Glenair manufactures and supplies both the connectors as well as the complete range of EMI, environmental, and mechanical strain relief backshells required in the construction of high-reliability wire harnesses and cable assemblies. All our Micro-D connectors and backshells are manufactured in our US and UK facilities and are uniquely supplied with industry-leading availability, up to and including same-day shipment.

Glenair Signature Series M83513 Backshells

Lightweight thin-wall construction Series 507 backshells

Solid-body strain relief backshell with Qwik-Ty cable attachment

Micro-D Accessories Selection Guide

Dust Caps & Covers

Protective Cover
500-017
Page B-5

Protective Cover, Low Profile
500-107
Page B-7

Protective Cover, Panel Mount
500-037
Page B-9

Anti-Static Dust Cap
000-00-XX-162/3
Page B-10

Rubber Cover
780-555
Page B-11

MLDM Dust Caps & Covers

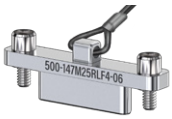
Protective Cover, MLDM
500-147 Page B-12

Anti-Static Dust Cap, MLDM
Page B-10

MLDM COVERS

These accessories fit **MLDM** Series Low Profile Micro-D connectors

Jackscrews & Screwlocks

Mil Spec Jackscrews
Page B-14

Jackscrews and Screwlocks
Page B-15

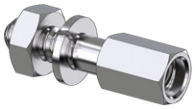
Jackpost Kits
Page B-16

Rear Panel Mount Jackpost Kits
Page B-17

Rear Panel Mount PCB Jackpost Kits
Page B-18

Backshell Hardware

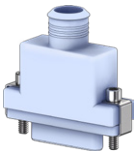

Backshell Hardware
Page B-19

Gaskets and Seals

Interfacial Seals
Page B-20

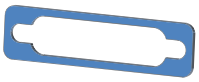
EMI Panel Gasket
Page B-21

Potting Shell

Potting Shell
507-035
Page B-22

Shorting Cap

Shorting Cap
500-016
Page B-23

© 2024 Glenair, Inc • 1211 Air Way, Glendale, CA 91201 • 818-247-6000 • www.glenair.com • U.S. CAGE code 06324 • Rectangular Accessories
Dimensions in Inches (millimeters) are subject to change without notice.

Micro-D Accessories Selection Guide

EMI Backshells
Round Entry
Solid

EMI Banding
500-010
Page B-25

EMI Braid Sock
500-011
Page B-27

Composite EMI Banding
507-088
Page B-29

Dual Entry EMI Banding
507-142
Page B-31

EMI Backshells
Elliptical Entry
Solid

Elliptical EMI Banding
500-047
Page B-32

Elliptical EMI Micro Band
507-175
Page B-33

Lightweight EMI Backshells
Elliptical Entry
Solid

Elliptical EMI Banding
507-296
Page B-35

45° Elliptical EMI Banding
507-297
Page B-37

Split EMI Backshells
Round Entry
Elliptical Entry

EMI Banding, Round Entry
507-145
Page B-39

EMI Banding, Elliptical Entry
507-178
Page B-40

Strain Relief Backshells

Qwik-Ty
500-012
Page B-42

Straight Clamp
507-146
Page B-44

Deerp Straight Clamp
507-198
Page B-45

CHECK WIRE BUNDLE SIZE

The ratio of wire bundle size to backshell entry should not exceed 80%. See 80% Entry Fill Table on next page for recommended sizes for round entry banding backshells when used with Micro-D pre-wired pigtails. In some cases the largest available entry size is too small to meet 80% maximum fill, and an elliptical entry backshell is recommended.

MLDM BACKSHELL

This accessory fits **MLDM** Series Low Profile Micro-D connectors

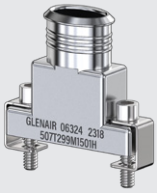
Elliptical EMI Banding, MLDM
507-299
Page B-46

© 2024 Glenair, Inc • 1211 Air Way, Glendale, CA 91201 • 818-247-6000 • www.glenair.com • U.S. CAGE code 06324 • Rectangular Accessories
Dimensions in Inches (millimeters) are subject to change without notice.

Micro-D Backshell Entry Fill Percentage

ENTRY FILL PERCENTAGE

Entry fill percentage (the ratio of the wire bundle area to the backshell entry area) should not exceed 80% to help assure system performance and safety.

Round entry banding backshells are not large enough to meet this best practice requirement, depending on the number of wires and the wire size. Elliptical backshells should be used instead.

Use the **80% Entry Fill Table** to determine the minimum backshell entry size code for standard Micro-D wire types and sizes.

Use the **Entry Fill Calculator** for custom wire bundles and/or elliptical backshells.

Elliptical banding backshells are recommended if the wire bundle area is greater than 80% of the backshell entry.

80% ENTRY FILL FOR ROUND ENTRY BACKSHELLS

This table shows recommended entry size codes for standard Micro-D pigtail wiring harnesses used with round entry banding backshells. If no entry size is shown (*), an elliptical backshell is recommended.

No. of Wires	Wire Type	Entry Size Code @80% Max Fill 24 AWG	26 AWG	28 AWG
9	M22759/11	06	06	05
	M22759/33	06	05	04
15	M22759/11	08	07	06
	M22759/33	07	06	05
21	M22759/11	09	08	07
	M22759/33	08	07	06
25	M22759/11	10	09	08
	M22759/33	09	08	07
31	M22759/11	11	10	09
	M22759/33	10	09	07
37	M22759/11	12	11	10
	M22759/33	10	09	08
51	M22759/11	*	12	11
	M22759/33	12	11	09
67	M22759/11	*	*	12
	M22759/33	*	12	10
69	M22759/11	*	*	*
	M22759/33	*	12	11
100	M22759/11	*	*	*
	M22759/33	*	*	*
130	M22759/11	*	*	*
	M22759/33	*	*	*

ENTRY SIZE FOR ROUND ENTRY BACKSHELLS

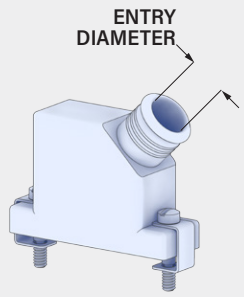

MICRO-D BANDING BACKSHELL WITH ROUND ENTRY

Entry Size Code	Entry Diameter Min. in	mm	Cross-Sectional Area sq in	sq mm
04	.110	2.8	.010	6.2
05	.141	3.6	.016	10.1
06	.173	4.4	.024	15.3
07	.204	5.2	.033	21.2
08	.235	6.0	.044	28.1
09	.266	6.8	.056	36.1
10	.297	7.5	.070	45.0
11	.329	8.4	.086	55.2
12	.360	9.1	.102	66.1

ENTRY FILL CALCULATOR

Step		Example
1	**Calculate Wire Cross-Sectional Area** Wire Cross-Sectional Area = (Wire Diameter)^2 * .79 * (No. of Wires) *(Repeat for each wire size and add together)*	*51 wires @ .045 inch diameter* .79 * 045 * .045 * 51 = .082 sq. in.
2	**Calculate Backshell Cross-Sectional Area** Round Entry Cross-Sectional Area = (Entry Diameter)^2 * .79 Elliptical Entry Area = .79 * a * b 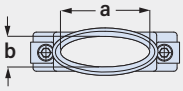	*Round Entry* *Size 12, .360 diameter* .79 * .360 * .360 = .103 sq. in. *Elliptical Entry* *Size 03 (507-175)* .79 * .644 * .290 = .148 sq. in.
3	Entry Fill Ratio = (1 Wire Cross-Sectional Area) / (2 Backshell Entry Cross-Sectional Area)	*Round Entry* .082 / .103 = .80 or 80% *Elliptical Entry* .082 / .148 = .55 or 55%

NOTES

1. When round entry banding backshells are used with solder cup Micro-D connectors, the transition angle from the outer pins to the entry port becomes severe and can increase damage susceptibility. Elliptical entry backshells minimize the transition angle and can reduce damage susceptibility.
2. For additional protection against wire abrasion, wrap wire bundle with polyimide tape in areas that may come into contact with interior angles.

© 2024 Glenair, Inc • 1211 Air Way, Glendale, CA 91201 • 818-247-6000 • www.glenair.com • U.S. CAGE code 06324 • Rectangular Accessories
Dimensions in Inches (millimeters) are subject to change without notice.

Band-Master ATS®

Shield Termination Bands and Tools

Band-Master ATS®

Terminate cable braid shield to adapter with stainless steel ***Band-Master ATS®*** bands. Install band with hand tool or bench-mounted pneumatic tool. Bands are available in ***Standard*** (.24 inch) and ***Micro*** (.12 inch) widths. ***Slim Standard*** and ***Micro Slim*** bands have reduced thickness for weight reduction. Hardened steel ***Micro-Max*** bands have 60% more tensile strength than standard Micro bands. Available pre-coiled, bands are 304 series stainless steel, passivated.

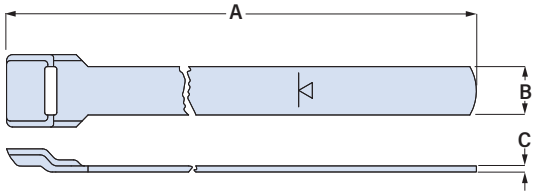

For more information on the Band-Master ATS EMI shield termination system, including instruction manuals and calibration details:
https://www.glenair.com/bandmaster/

Band and Band Tool Part Numbers

Size		A Length in	A Length mm	Fits up to Dia. in	Fits up to Dia. mm	B Width in	B Width mm	C Thickness in	C Thickness mm	Part Number Pre-coiled	Hand Tool Part Number
Standard		9	228	1.00	25.4	.24	6.1	.02	0.5	601-006	601-100
		14	355	1.80	45.7	.24	6.1	.02	0.5	601-041	
		18	457.	2.50	63.5	.24	6.1	.02	0.5	601-050	
Slim Standard		9	228	.94	23.9	.24	6.1	.01	0.3	601-571	601-109
		14	355	1.80	45.7	.24	6.1	.01	0.3	601-573	
Micro		5	127	.50	12.7	.12	3.0	.015	0.4	601-025	601-101
		8	203	.88	22.4	.12	3.0	.015	0.4	601-061	
		14	356	1.88	47.7	.12	3.0	.015	0.4	601-065	
Micro Slim		8	203	.88	22.4	.12	3.0	.01	0.3	601-601	601-122
		14	356	1.88	47.7	.12	3.0	.01	0.3	601-603	
Micro-Max		8	203	.88	22.4	.12	3.0	.015	0.4	601-701	601-129
		14	356	1.88	47.7	.12	3.0	.015	0.4	601-703	

© 2024 Glenair, Inc • 1211 Air Way, Glendale, CA 91201 • 818-247-6000 • www.glenair.com • U.S. CAGE code 06324 • Rectangular Accessories
Dimensions in Inches (millimeters) are subject to change without notice.

500-017
Protective Cover

- Fits MWDM and M83513 Class M
- Silicone Gasket
- Top, Side and 45° Entry

500-017

This accessory fits MIL-DTL-83513 Class M and MWDM Micro-D connectors

500-017 protective cover fits M83513 Class M and MWDM Micro-D connectors. Rubber gasket provides dust and moisture protection. Available with lanyard for panel or cable attachment. Aluminum with stainless steel screws and washers, silicone gasket.

TABLE 1
ATTACHMENT TYPE

F — **Wire Rope, Blue Nylon Jacket**
6/6 nylon over stainless steel rope, fair flexibility, good abrasion resistance, -55 to +100 °C

G — **Black Nylon Rope**
Very flexible, good abrasion and fuel resistance, .062 (1.6) diameter, -55 to +100 °C

H — **Wire Rope, Clear FEP Jacket**
Clear FEP jacket over SST rope, fair flexibility, good abrasion resistance, .100" diameter, -65 to +200 °C

SK — **Nylon Rope with Slip Knot**
Very flexible, good abrasion and fuel resistance, .094 (2.4) diameter. Length includes .5" (13mm) dia. loop, -55 to +100 °C

T — **SST Wire Rope, No Jacket**
Good flexibility, good abrasion resistance, .047 (1.2) diameter, passivated, -65 to +200 °C

PART NUMBER

Sample PN➜ **500-017 NF 37 F F 6 -06**

Base P/N	**500-017**
Finish	**TZ** Tin-Zinc **JF** Cadmium w/ Yellow Chromate **M** Electroless Nickel **MT** Nickel-PTFE **ZR** Black Zinc-Nickel **Z2** Gold **NF** CAD/O. D. Over Electroless Nickel (1000 Hour Salt Spray)
Shell Size	**09 15 21 25 31 37 51 51-2 67 69 75 100 130**
Jackscrews	**F** Female Threads **MB** Fillister Head Male Jackscrews **MH** Socket Head Male Jackscrews
Attachment Type *(Table 1)*	**N** No Attachment **F** SST Wire Rope, Nylon Jacket **G** Nylon Rope **H** SST Wire Rope, FEP Jacket **SK** Nylon Rope with Slip Knot **T** SST Wire Rope, No Jacket
Attachment Length	*Omit If No Attachment* Length in One Inch Increments
Dash Number	*Omit If No Attachment* *Omit for Attachment Type SK*

Code	Ring Inside Diameter
-06	.125 (3.2)
-01	.140 (3.6)
-02	.182 (4.6)
-04	.197 (5.0)

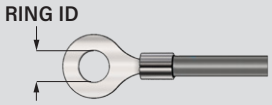

500-017

Protective Cover

- Fits MWDM and M83513 Class M
- Silicone Gasket
- Top, Side and 45° Entry

MB **MH**

MALE JACKSCREWS

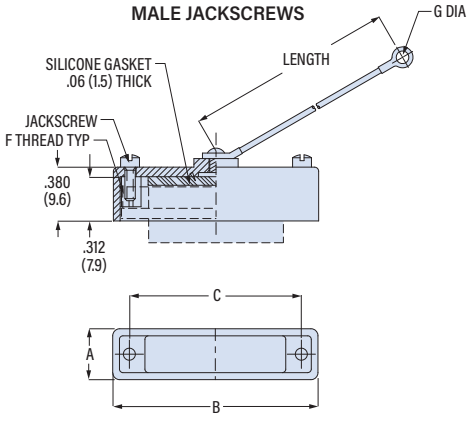

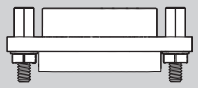

USE MB AND MH TYPE COVER WITH METAL SHELL MICRO-D CONNECTOR WITH FEMALE JACKPOSTS

F

TAPPED FEMALE THREADS

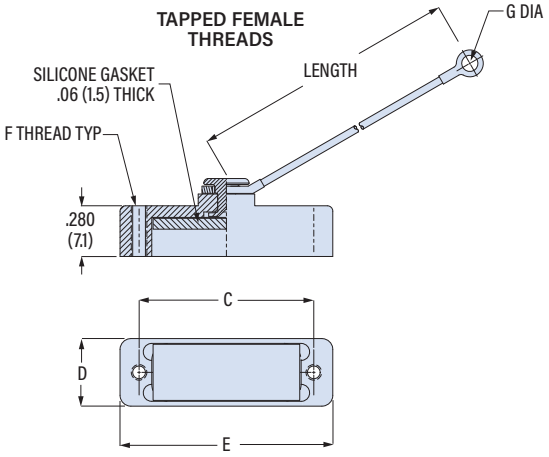

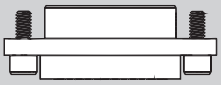

USE F TYPE COVER WITH METAL SHELL MICRO-D CONNECTOR WITH MALE JACKSCREWS

Size	A Max. in	A Max. mm	B Max in	B Max mm	C in	C mm	D Max in	D Max mm	E Max in	E Max mm	F Thd UNC-2
09	.453	11.5	.930	23.6	.565	14.4	.380	9.7	.795	20.2	2-56
15	.453	11.5	1.080	27.4	.715	18.2	.380	9.7	.945	24.0	2-56
21	.453	11.5	1.230	31.2	.865	22.0	.380	9.7	1.095	27.8	2-56
25	.453	11.5	1.330	33.8	.965	24.5	.380	9.7	1.195	30.4	2-56
31	.453	11.5	1.480	37.6	1.115	28.3	.380	9.7	1.345	34.2	2-56
37	.453	11.5	1.630	41.4	1.265	32.1	.380	9.7	1.495	38.0	2-56
51	.496	12.6	1.580	40.1	1.215	30.9	.420	10.7	1.445	36.7	2-56
51-2	.453	11.5	1.980	50.3	1.615	41.0	.380	9.7	1.845	46.9	2-56
67	.453	11.5	2.380	60.5	2.015	51.2	.380	9.7	2.245	57.0	2-56
69	.496	12.6	1.880	47.8	1.515	38.5	.420	10.7	1.745	44.3	2-56
75	.496	12.6	2.220	56.4	1.705	43.3	.420	10.7	2.085	53.0	4-40
100	.539	13.7	2.315	58.8	1.800	45.7	.470	11.9	2.180	55.4	4-40
130	.539	13.7	2.675	67.9	2.160	54.6	.470	11.9	2.540	64.5	4-40

© 2024 Glenair, Inc • 1211 Air Way, Glendale, CA 91201 • 818-247-6000 • www.glenair.com • U.S. CAGE code 06324 • Rectangular Accessories
Dimensions in Inches (millimeters) are subject to change without notice.

500-107
Protective Cover, Low Profile

■ For MWDM and M83513 Micro-D

500-107

This accessory fits MIL-DTL-83513 Class M and MWDM Micro-D connectors

500-107 protective cover fits M83513 Class M and MWDM metal shell Micro-D connectors. Plug connector cover fits over connector shell and has fluorosilicone gasket. Receptacle connector cover fits inside connector shell. Aluminum or stainless steel. Stainless steel hardware.

TABLE 1
HARDWARE OPTIONS

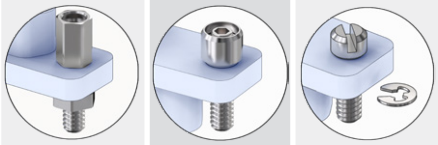

P	L	S
Female Jackposts	Socket Head Jackscrews	Slotted Jackscrews

TABLE 2
ATTACHMENT TYPE

F	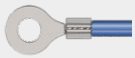	SST Wire Rope, Nylon Jacket -55 to +100 °C
G	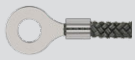	Black Nylon Rope -55 to +100 °C
H		SST Wire Rope, FEP Jacket -65 to +200 °C
T		Wire Rope, No Jacket -65 to +200 °C

PART NUMBER

Sample PN➜ **500-107 M 51 R L F 5 -06**

Base P/N	500-107	
Material / Finish	TZ	Tin-Zinc
	JF	Alum / Cadmium w/ Yel. Chromate
	M	Alum / Electroless Nickel
	MT	Alum / Nickel-PTFE
	ZR	Alum / Black Zinc-Nickel
	Z1	SST / Passivated
	Z2	Alum / Gold
Shell Size	09 15 21 25 31 37 51 51-2 67 69 75 100 130	
Plug/ Receptacle	P	Cover for Plug Connector
	R	Cover for Receptacle Connector
Hardware *(Table 1)*	B	No Hardware *(Thru-Holes)*
	P	Female Jackposts
	L	Socket Head Jackscrews
	S	Slot Head Jackscrews
Attachment Type *(Table 2)*	NB	No Attachment *(Boss Deleted)*
	F	SST Wire Rope, Nylon Jacket
	G	Nylon Rope
	H	SST Wire Rope, FEP Jacket
	T	SST Wire Rope, No Jacket
Attachment Length	*Omit If No Attachment* Length in One Inch Increments (*"5" = Five Inches)*	
Attachment Ring Dia.	*Omit If No Attachment*	

	Ring Dia.
-06	.125 (3.2)
-01	.140 (3.6)
-02	.182 (4.6)
-04	.197 (5.0)

RING ID

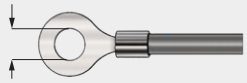

© 2024 Glenair, Inc • 1211 Air Way, Glendale, CA 91201 • 818-247-6000 • www.glenair.com • U.S. CAGE code 06324 • Rectangular Accessories
Dimensions in Inches (millimeters) are subject to change without notice.

500-107

Protective Cover, Low Profile

■ For MWDM and M83513 Micro-D

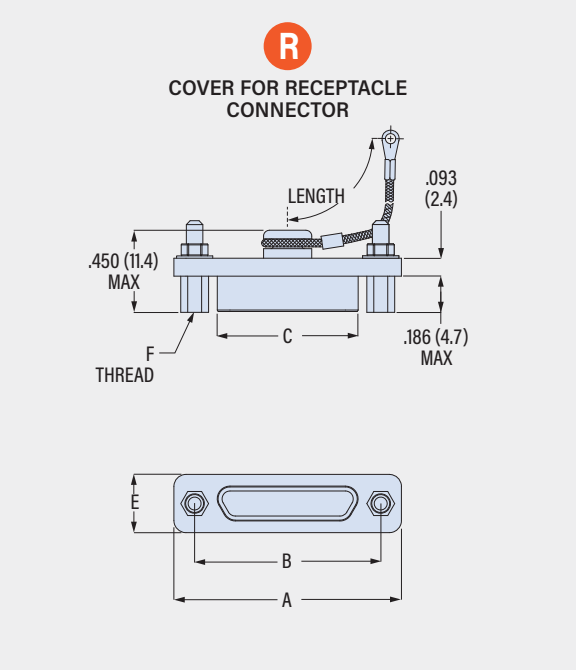

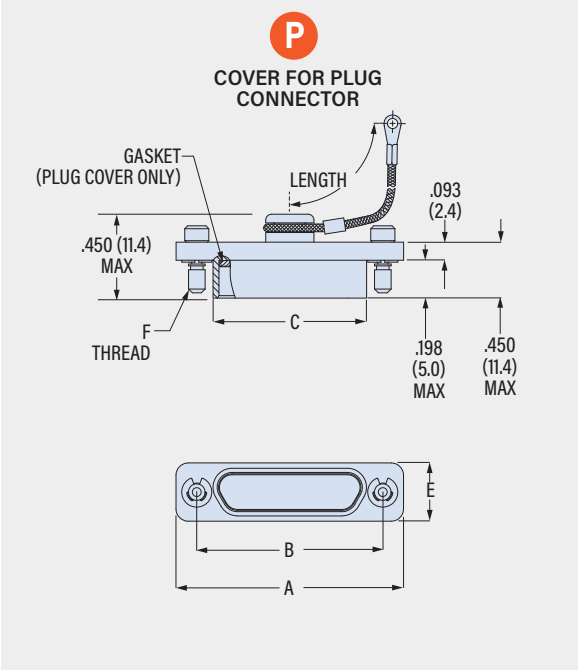

Layout	A Max in	A Max mm	B ± .003 in	B ± .003 mm	C Max in	C Max mm	D Max in	D Max mm	E Max in	E Max mm	F Thd UNC-2
09R	.785	19.9	.565	14.4	.333	8.5	.184	4.7	.308	7.8	2-56
09P	.785	19.9	.565	14.4	.400	10.2	.250	6.4	.308	7.8	2-56
15R	.935	23.7	.715	18.2	.483	12.3	.184	4.7	.308	7.8	2-56
15P	.935	23.7	.715	18.2	.551	14.0	.250	6.4	.308	7.8	2-56
21R	1.085	27.6	.865	22.0	.633	16.1	.184	4.7	.308	7.8	2-56
21P	1.085	27.6	.865	22.0	.701	17.8	.250	6.4	.308	7.8	2-56
25R	1.185	30.1	.965	24.5	.733	18.6	.184	4.7	.308	7.8	2-56
25P	1.185	30.1	.965	24.5	.801	20.3	.250	6.4	.308	7.8	2-56
31R	1.335	33.9	1.115	28.3	.883	22.4	.184	4.7	.308	7.8	2-56
31P	1.335	33.9	1.115	28.3	.951	24.2	.250	6.4	.308	7.8	2-56
37R	1.485	37.7	1.265	32.1	1.033	26.2	.184	4.7	.308	7.8	2-56
37P	1.485	37.7	1.265	32.1	1.101	28.0	.250	6.4	.308	7.8	2-56
51R	1.435	36.4	1.215	30.9	.983	25.0	.228	5.8	.351	8.9	2-56
51P	1.435	36.4	1.215	30.9	1.051	26.7	.296	7.5	.351	8.9	2-56
51-2R	1.835	46.6	1.615	41.0	1.384	35.2	.184	4.7	.308	7.8	2-56
51-2P	1.835	46.6	1.615	41.0	1.450	36.8	.250	6.4	.308	7.8	2-56
67R	2.235	56.8	2.015	51.2	1.784	45.3	.184	4.7	.310	7.9	2-56
67P	2.235	56.8	2.015	51.2	1.850	47.0	.250	6.4	.310	7.9	2-56
69R	1.735	44.1	1.515	38.5	1.284	32.6	.228	5.8	.351	8.9	2-56
69P	1.735	44.1	1.515	38.5	1.350	34.3	.296	7.5	.351	8.9	2-56
75R	2.080	52.8	1.705	43.3	1.384	35.2	.228	5.8	.351	8.9	4-40
75P	2.080	52.8	1.705	43.3	1.450	36.8	.296	7.5	.351	8.9	4-40
100R	2.170	55.1	1.800	45.7	1.383	35.1	.270	6.9	.394	10.0	4-40
100P	2.170	55.1	1.800	45.7	1.451	36.9	.333	8.5	.394	10.0	4-40
130R	2.520	64.0	2.150	54.6	1.735	44.1	.270	6.9	.394	10.0	4-40
130P	2.520	64.0	2.150	54.6	1.795	45.6	.333	8.5	.394	10.0	4-40

© 2024 Glenair, Inc • 1211 Air Way, Glendale, CA 91201 • 818-247-6000 • www.glenair.com • U.S. CAGE code 06324 • Rectangular Accessories
Dimensions in Inches (millimeters) are subject to change without notice.

500-037

Protective Cover, Rear Panel Mount

500-037

This accessory fits rear-panel mounted MIL-DTL-83513 Class M Micro-D and MWDM connectors

For rear panel mounted connectors. 500-037 protective cover fits M83513 Class M and MWDM Micro-D connectors. Rubber gasket provides dust and moisture protection. Available with lanyard for panel attachment. Aluminum with stainless steel jackscrews, silicone gasket.

TABLE 2
ATTACHMENT TYPE

F	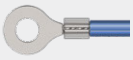	SST Wire Rope, Nylon Jacket -55 to +100 °C
H	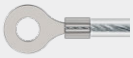	SST Wire Rope, FEP Jacket -65 to +200 °C
T		Wire Rope, No Jacket -65 to +200 °C

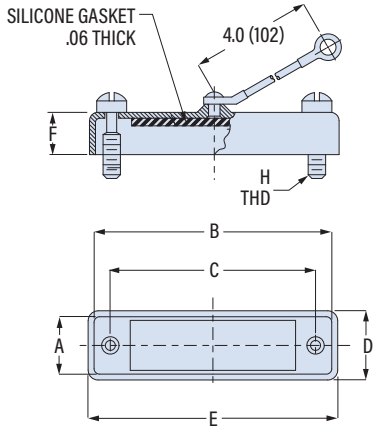

PART NUMBER

Sample PN➜ **500-037 M 21 R3 B F -06 -5**

Base P/N — **500-037**

Finish

TZ	Tin-Zinc
JF	Cadmium w/ Yellow Chromate
M	Electroless Nickel
MT	Nickel-PTFE
ZR	Black Zinc-Nickel
Z2	Gold

Shell Size — 09 15 21 25 31 37 51 51-2 67 69 75 100 130

Panel Thickness

Code	Panel Thickness	F
R1	.031 (0.8)	.126 (3.2)
R2	.047 (1.2)	.110 (2.8)
R3	.062 (1.6)	.095 (2.4)
R4	.093 (2.4)	.064 (1.6)
R5	.125 (3.2)	.032 (.8)

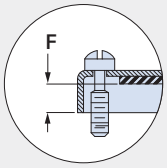

Jackscrews

B	Fillister Head Male Jackscrews
H	Socket Head Male Jackscrews

Attachment Type

N	No Attachment
F	SST Wire Rope, Nylon Jacket
H	SST Wire Rope, FEP Jacket
T	SST Wire Rope, No Jacket

Attachment Dia. — *Omit If No Attachment*

Code	Ring I.D.
-06	.125 (3.2)
-01	.140 (3.6)
-02	.182 (4.6)
-04	.197 (5.0)

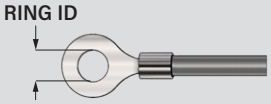

Attachment Length — *Omit for standard 4 inch (102mm) length*
Length in Inches (Ex: **-2** = 2 inches)

Size	A Max in	A Max mm	B Max in	B Max mm	C in	C mm	D Max in	D Max mm	E Max in	E Max mm	H Thd UNC-2A
09	.328	8.3	.805	20.4	.565	14.4	.453	11.5	.930	23.6	2-56
15	.328	8.3	.955	24.3	.715	18.2	.453	11.5	1.080	27.4	2-56
21	.328	8.3	1.105	28.1	.865	22.0	.453	11.5	1.230	31.2	2-56
25	.328	8.3	1.205	30.6	.965	24.5	.453	11.5	1.330	33.8	2-56
31	.328	8.3	1.355	34.4	1.115	28.3	.453	11.5	1.480	37.6	2-56
37	.328	8.3	1.505	38.2	1.265	32.1	.453	11.5	1.630	41.4	2-56
51	.371	9.4	1.455	37.0	1.215	30.9	.496	12.6	1.580	40.1	2-56
51-2	.328	8.3	1.855	47.1	1.615	41.0	.453	11.5	1.980	50.3	2-56
67	.328	8.3	2.255	57.3	2.015	51.2	.453	11.5	2.380	60.5	2-56
69	.371	9.4	1.755	44.6	1.515	38.5	.496	12.6	1.880	47.8	2-56
75	.371	9.4	2.100	53.3	1.705	43.3	.496	12.6	2.225	56.5	4-40
100	.414	10.5	2.190	55.6	1.800	45.7	.539	13.7	2.315	58.8	4-40
130	.414	10.5	2.550	64.8	2.160	54.6	.539	13.7	2.675	67.9	4-40

© 2024 Glenair, Inc • 1211 Air Way, Glendale, CA 91201 • 818-247-6000 • www.glenair.com • U.S. CAGE code 06324 • Rectangular Accessories
Dimensions in Inches (millimeters) are subject to change without notice.

Anti-Static Dust Caps

For M83513 and Micro-D Connectors

Anti-static dust caps fit Micro-D and MIL-DTL-83513 connectors. These caps provide electrostatic protection to sensitive equipment. These caps meet the static decay requirement of MIL-PRF-81705. Surface resistivity is greater than 1 x 10^5 ohms/square and less than 1 x 10^{12} ohms/square. Black LDPE.

DUST CAPS FOR M83513 CLASS M AND MWDM MICRO-D

Size	Part No.	A in	A mm	B in	B mm
9P	000-01-09-162	.524	13.3	.393	10.0
9S	000-01-09-163	.563	14.3	.428	10.9
15P	000-01-15-162	.647	16.4	.393	10.0
15S	000-01-15-163	.713	18.1	.428	10.9
21P	000-01-21-162	.824	20.9	.393	10.0
21S	000-01-21-163	.863	21.9	.428	10.9
25P	000-01-25-162	.924	23.5	.393	10.0
25S	000-01-25-163	.963	24.5	.428	10.9
31P	000-01-31-162	1.074	27.3	.393	10.0
31S	000-01-31-163	1.113	28.3	.428	10.9
37P	000-01-37-162	1.224	31.1	.393	10.0
37S	000-01-37-163	1.263	32.1	.428	10.9
51P	000-01-51-162	1.174	29.8	.436	11.1
51S	000-01-51-163	1.213	30.8	.470	11.9
51-2P	000-01-51-172	1.574	40.0	.393	10.0
51-2S	000-01-51-173	1.612	40.9	.428	10.9
67P	000-01-67-162	1.974	50.1	.393	10.0
67S	000-01-67-163	2.013	51.1	.428	10.9
69P	000-01-69-162	1.474	37.4	.436	11.1
69S	000-01-69-163	1.512	38.4	.470	11.9
75P	000-01-75-162	1.574	40.0	.436	11.1
75S	000-01-75-163	1.612	40.9	.470	11.9
100P	000-01-00-162	1.574	40.0	.479	12.2
100S	000-01-00-163	1.615	41.0	.516	13.1
130P	000-01-30-162	1.947	49.5	.476	12.1
130S	000-01-30-163	1.975	50.2	.504	12.8

SIZE 09 THRU 75

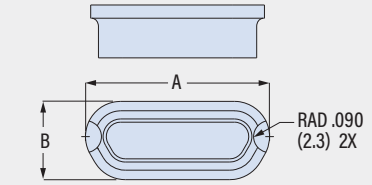

PLUG CONNECTOR COVER
000-01-XX-162 & -172

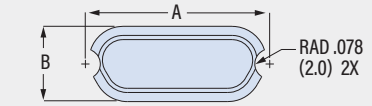

RECEPTACLE CONNECTOR COVER
000-01-XX-163 & -173

SIZE 100

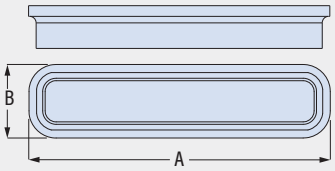

SIZE 130

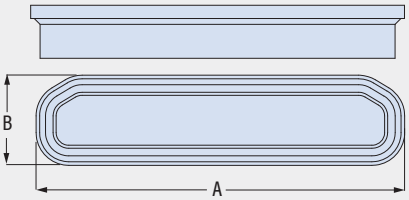

DUST CAPS FOR M83513 CLASS P AND MLDM LOW PROFILE MICRO-D

Size	Part No.	A in	A mm	B in	B mm
9P	000-01-09-164	.491	12.5	.349	8.9
9S	000-01-09-165	.565	14.4	.392	10.0
15P	000-01-15-164	.639	16.2	.349	8.9
15S	000-01-15-165	.715	18.2	.392	10.0
21P	000-01-21-164	.789	20.0	.349	8.9
21S	000-01-21-165	.865	22.0	.392	10.0
25P	000-01-25-164	.889	22.6	.349	8.9
25S	000-01-25-165	.965	24.5	.392	10.0
31P	000-01-31-164	1.039	26.4	.349	8.9
31S	000-01-31-165	1.115	28.3	.392	10.0
37P	000-01-37-164	1.189	30.2	.349	8.9
37S	000-01-37-165	1.265	32.1	.392	10.0
51P	000-01-51-164	1.139	28.9	.390	9.9
51S	000-01-51-165	1.215	30.9	.435	11.0

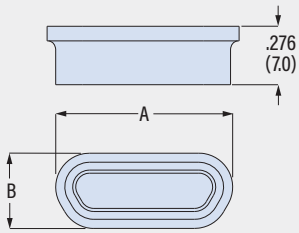

PLUG CONNECTOR COVER
000-01-XX-164

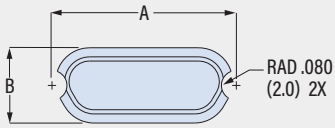

RECEPTACLE CONNECTOR COVER
000-01-XX-165

© 2024 Glenair, Inc • 1211 Air Way, Glendale, CA 91201 • 818-247-6000 • www.glenair.com • U.S. CAGE code 06324 • Rectangular Accessories
Dimensions in Inches (millimeters) are subject to change without notice.

780-555
Protective Cover, Rubber

780-555

This accessory fits MIL-DTL-83513 Class M and MWDM Micro-D connectors

Neoprene or silicone. 780-555 rubber cover fits metal shell Micro-D connectors. Cover protects connector from damage and contamination. Three material choices: black neoprene, carbon-filled conductive black neoprene, or red silicone. Nylon rope lanyard attaches cover to cable or panel. Attachment choices include cable tie, slip knot or stainless steel ring. ***Not rated for water immersion.***

PART NUMBER

Sample PN➜ **780-555 -25S G 4 -06 C**

Base P/N	**780-555**
Size	**-9P -9S -15P -15S -21P -21S -25P -25S -31P -31S -37P -51P -51S -51-2P -51-2S -69P -69S -100P -100S**
Attachment	***Omit*** No Attachment **G** Nylon Rope
Attachment Length	Length in One Inch Increments *(Example: **4** = four inch lanyard)*
Attachment Fitting	

Code	Fitting Type	Ring I.D.
-00	No Fitting	N/A
-04	Ring	.197 (5.0)
-06	Ring	.125 (3.2)
-07	Ring	.218 (5.5)
-09	Ring	.156 (4.0)
-WS	Cable Tie	N/A
-SK	Slip Knot	N/A

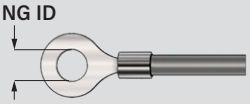

Material	***Omit*** Black Neoprene **C** Conductive Black Neoprene (10^5 Ω/square min.) **S** Red Silicone

ATTACHMENT FITTING

SK SLIP KNOT

Nylon Rope, Kynar Friction Sleeve

WS CABLE TIE

6/6 nylon cable tie with screw and locknut.
1.77 (45.0) max. wire bundle dia. -40 to +85 °C.

RING TERMINAL

Screw Size	Ring Code	Ring I.D. ±.010 (0.25) in	mm
#4	-06	.125	3.2
#6	-09	.156	4.0
#8	-04	.197	5.0
#10	-07	.218	5.5

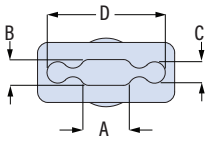

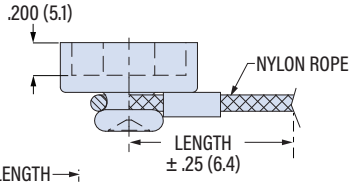

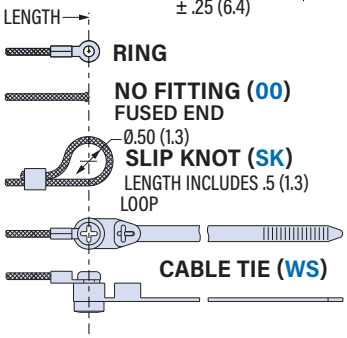

Layout	A in	A mm	B in	B mm	C in	C mm	D in	D mm
9P	.30	7.6	.15	3.8	.13	3.3	.69	17.5
9S	.37	9.4	.22	5.6	.13	3.3	.69	17.5
15P	.45	11.4	.15	3.8	.13	3.3	.84	21.3
15S	.52	13.2	.22	5.6	.13	3.3	.84	21.3
21P	.60	15.2	.15	3.8	.13	3.3	.99	25.1
21S	.67	17.0	.22	5.6	.13	3.3	.99	25.1
25P	.70	17.8	.15	3.8	.13	3.3	1.09	27.7
25S	.77	19.6	.22	5.6	.13	3.3	1.09	27.7
31P	.85	21.6	.15	3.8	.13	3.3	1.24	31.5
31S	.92	23.4	.22	5.6	.13	3.3	1.24	31.5
37P	1.00	25.4	.15	3.8	.13	3.3	1.39	35.3
37S	1.07	25.9	.22	5.6	.13	3.3	1.39	35.3
51-2P	1.35	34.3	.15	3.8	.13	3.3	1.74	44.2
51-2S	1.42	36.1	.22	5.6	.13	3.3	1.74	44.2
51P	.95	24.1	.19	4.8	.13	3.3	1.34	34.0
51S	1.02	25.9	.26	6.6	.13	3.3	1.34	34.0
69P	1.25	31.8	.19	4.8	.13	3.3	1.64	41.7
69S	1.32	33.5	.26	6.6	.13	3.3	1.64	41.7
100P	1.35	34.3	.24	6.1	.19	4.8	1.99	50.5
100S	1.41	35.8	.30	7.6	.19	4.8	1.99	50.5

© 2024 Glenair, Inc • 1211 Air Way, Glendale, CA 91201 • 818-247-6000 • www.glenair.com • U.S. CAGE code 06324 • Rectangular Accessories
Dimensions in Inches (millimeters) are subject to change without notice.

500-147
Protective Cover, MLDM

■ For Low-Profile MLDM Micro-D

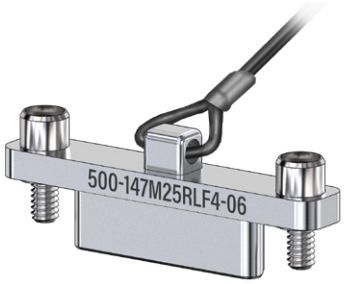

500-147

This accessory fits MLDM Low Profile Metal Shell Micro-D Connectors

500-147 protective cover fits low profile MLDM metal shell Micro-D connectors. Plug connector cover fits over connector shell and has fluorosilicone gasket. Receptacle connector cover fits inside connector shell. Aluminum or stainless steel with stainless steel hardware.

PART NUMBER

Sample PN➜	**500-147**	**M**	**51**	**R**	**M**	**F**	**5**	**-06**

Base P/N	**500-147**
Material / Finish	**TZ** Tin-Zinc **JF** Alum / Cadmium w/ Yel. Chromate **M** Alum / Electroless Nickel **MT** Alum / Nickel-PTFE **ZR** Alum / Black Zinc-Nickel **Z1** SST / Passivated **Z2** Alum / Gold
Shell Size	**09 15 21 25 31 37 51 51-2**
Plug/ Receptacle	**P** Cover for Plug Connector **R** Cover for Receptacle Connector
Hardware *(Table 1)*	**B** No Hardware *(Thru-Holes)* **P** Female Jackposts **L** Socket Head Jackscrews **S** Slot Head Jackscrews
Attachment Type *(Table 2)*	**N** No Attachment **F** SST Wire Rope, Nylon Jacket **G** Nylon Rope **H** SST Wire Rope, FEP Jacket **T** SST Wire Rope, No Jacket
Attachment Length	***Omit*** *If No Attachment* Length in One Inch Increments ("**5**" = *Five Inches*)
Attachment Ring Dia.	***Omit*** *If No Attachment* **-06** .125 (3.2) **-01** .140 (3.6) **-02** .182 (4.6) **-04** .197 (5.0)

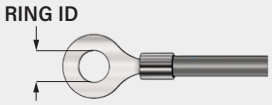

TABLE 1
HARDWARE OPTIONS

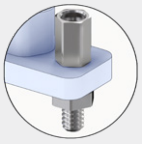

P Female Jackposts

L Socket Head Jackscrews

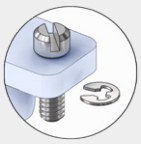

S Slotted Jackscrews

TABLE 2
ATTACHMENT TYPE

F	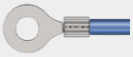	SST Wire Rope, Nylon Jacket -55 to +100 °C
G	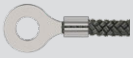	Black Nylon Rope -55 to +100 °C
H	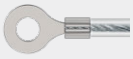	SST Wire Rope, FEP Jacket -65 to +200 °C
T		Wire Rope, No Jacket -65 to +200 °C

© 2024 Glenair, Inc • 1211 Air Way, Glendale, CA 91201 • 818-247-6000 • www.glenair.com • U.S. CAGE code 06324 • Rectangular Accessories
Dimensions in Inches (millimeters) are subject to change without notice.

500-147

Protective Cover, MLDM

■ For Low-Profile MLDM Micro-D

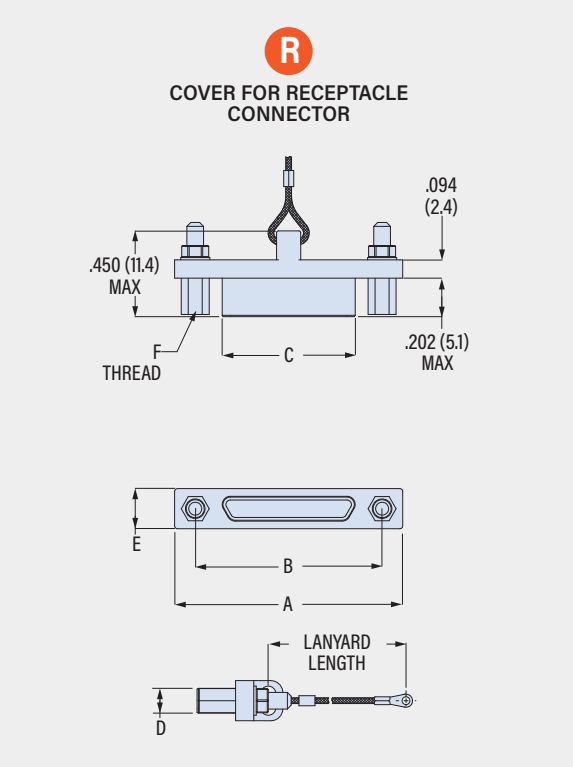

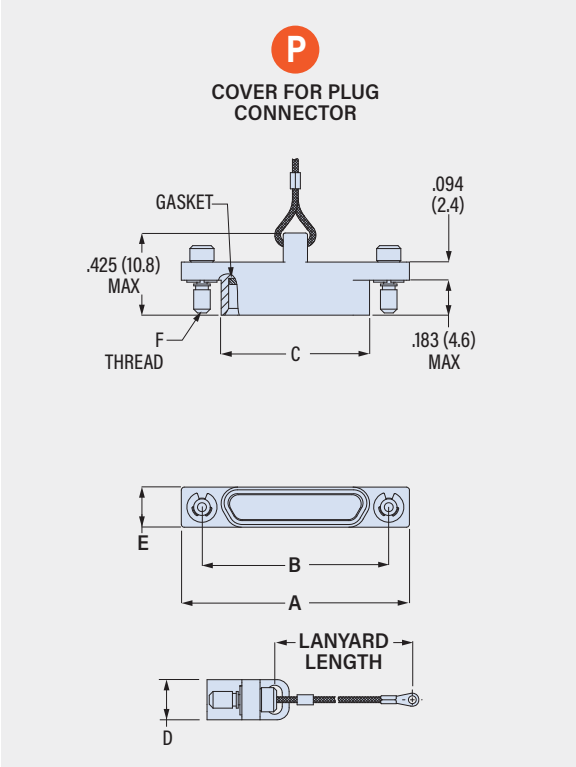

Layout	A Max in	A Max mm	B in	B mm	C Max in	C Max mm	D Max in	D Max mm	E Max in	E Max mm	F Thd UNC-2
09R	.788	20.0	.565	14.4	.292	7.4	.134	3.4	.218	5.5	2-56
09P	.788	20.0	.565	14.4	.380	9.7	.218	5.5	.218	5.5	2-56
15R	.938	23.8	.715	18.2	.442	11.2	.134	3.4	.218	5.5	2-56
15P	.938	23.8	.715	18.2	.530	13.5	.218	5.5	.218	5.5	2-56
21R	1.088	27.6	.865	22.0	.592	15.0	.134	3.4	.218	5.5	2-56
21P	1.088	27.6	.865	22.0	.680	17.3	.218	5.5	.218	5.5	2-56
25R	1.188	30.2	.965	24.5	.692	17.6	.134	3.4	.218	5.5	2-56
25P	1.188	30.2	.965	24.5	.780	19.8	.218	5.5	.218	5.5	2-56
31R	1.338	34.0	1.115	28.3	.842	21.4	.134	3.4	.218	5.5	2-56
31P	1.338	34.0	1.115	28.3	.930	23.6	.218	5.5	.218	5.5	2-56
37R	1.488	37.8	1.265	32.1	.992	25.2	.134	3.4	.218	5.5	2-56
37P	1.488	37.8	1.265	32.1	1.080	27.4	.218	5.5	.218	5.5	2-56
51R	1.438	36.5	1.215	30.9	.942	23.9	.177	4.5	.260	6.6	2-56
51P	1.438	36.5	1.215	30.9	1.030	26.2	.260	6.6	.260	6.6	2-56
51-2R	1.838	46.7	1.615	41.0	1.340	34.0	.134	3.4	.218	5.5	2-56
51-2P	1.838	46.7	1.615	41.0	1.425	36.2	.218	5.5	.218	5.5	2-56

© 2024 Glenair, Inc • 1211 Air Way, Glendale, CA 91201 • 818-247-6000 • www.glenair.com • U.S. CAGE code 06324 • Rectangular Accessories
Dimensions in Inches (millimeters) are subject to change without notice.

Mil-Spec Jackscrew Kits

For M83513 and Micro-D Connectors

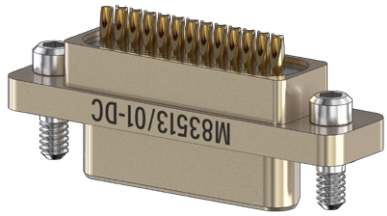

1 Slotted Low Profile

2 Socket Head Low Profile

3 Slotted Extended

4 Socket Head Extended

Stainless steel Micro-D jackscrew kits conform to MIL-DTL-83513/05. Kit consists of (2) jackscrews and (2) retainer rings. Choose slotted head or socket head. Two thread sizes: 2-56 for size 9 to 69, 4-40 for sizes 79, 100 and 130. Place jackscrew through connector mounting hole, then slide e-ring into slot on jackscrew.

Material: *125 kpsi stainless steel, passivated*

Application note: *retainer ring does not meet the 2 μ magnetic permeability requirement of M83513 connectors.*

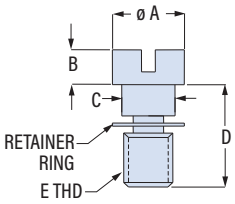

1

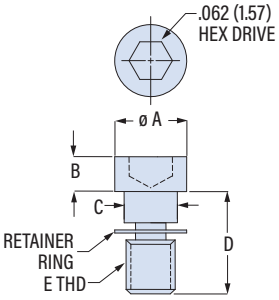

2

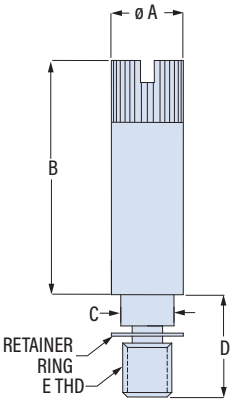

3

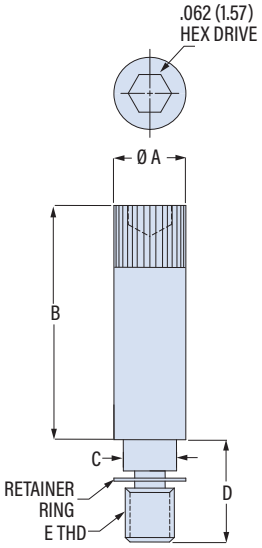

4

M83513/05 MICRO-D JACKSCREW KITS

Figure	Type	Thread Size	Connector Size	Part Number	M83513 PIN	ø A in	ø A mm	B Max in	B Max mm	C in	C mm	D Max in	D Max mm	E Thread UNC-2A
1	Slotted Low Profile	2-56	9-69	080-00-00-505	M83513/05-05	.125	3.2	.103	2.6	.083	2.1	.258	6.6	2-56
		4-40	75, 100, 130	080-00-00-515	M83513/05-15	.187	4.7	.098	2.5	.140	3.6	.292	7.4	4-40
2	Socket Head Low Profile	2-56	9-69	080-00-00-502	M83513/05-02	.125	3.2	.103	2.6	.083	2.1	.258	6.6	2-56
		4-40	75, 100, 130	080-00-00-512	M83513/05-12	.187	4.7	.098	2.5	.140	3.6	.292	7.4	4-40
3	Slotted Extended	2-56	9-69	080-00-00-506	M83513/05-06	.156	4.0	.610	15.5	.083	2.1	.258	6.6	2-56
		4-40	75, 100, 130	080-00-00-516	M83513/05-16	.200	5.1	.610	15.5	.140	3.6	.292	7.4	4-40
4	Socket Head Extended	2-56	9-69	080-00-00-503	M83513/05-03	.156	4.0	.610	15.5	.083	2.1	.258	6.6	2-56
		4-40	75, 100, 130	080-00-00-513	M83513/05-13	.200	5.1	.610	15.5	.140	3.6	.292	7.4	4-40

© 2024 Glenair, Inc • 1211 Air Way, Glendale, CA 91201 • 818-247-6000 • www.glenair.com • U.S. CAGE code 06324 • Rectangular Accessories
Dimensions in Inches (millimeters) are subject to change without notice.

179-013, 179-162

Jackscrews and Screwlocks, Micro-D

- For Connector without Backshell
- Fits M83513 and MWDM Micro-D
- Includes Retention Clip

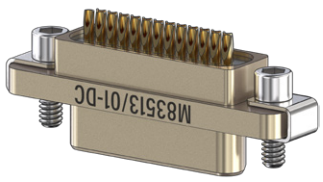

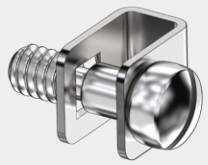

1 Fillister Head

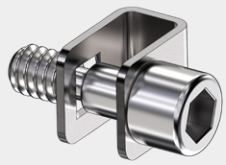

2 Socket Head

Stainless steel screwlock and jackscrew kits fit Micro-D connectors without backshells. Screwlocks allow the connectors to be fully mated before the screws are tightened. Jackscrews must be tightened in order to mate connectors. Kit consists of (1) screw and (1) retainer clip, ***order (2) kits per connector***. Jackscrew and clip are passivated stainless steel.

PART NUMBER

Figure	Style	Type	Thread Size	Connector Size	Part No.
1	Fillister Head	Screwlock	2-56	9-69	179-162-1S
			4-40	75-130	179-162-2S
		Jackscrew	2-56	9-69	179-013-1S
			4-40	75-130	179-013-2S
2	Socket Head	Screwlock	2-56	9-69	179-162-1H
			4-40	75-130	179-162-2H
		Jackscrew	2-56	9-69	179-013-1H
			4-40	75-130	179-013-2H

ASSEMBLY NOTE

CLIP
CLIP HAS CIRCULAR HOLE AND SQUARE HOLE.

SCREWLOCK
INSTALL CLIP ON CONNECTOR FLANGE WITH SQUARE HOLE ON TOP. SCREW IS FLOATING.

JACKSCREW
INSTALL CLIP ON CONNECTOR FLANGE WITH SQUARE HOLE ON THE BOTTOM. SCREW IS CAPTIVE.

179-013-1H

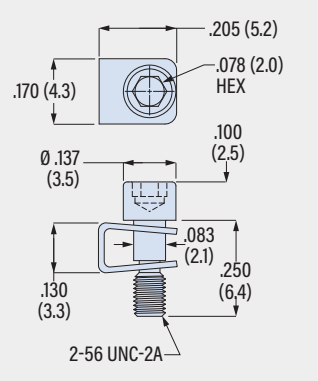

179-013-1S

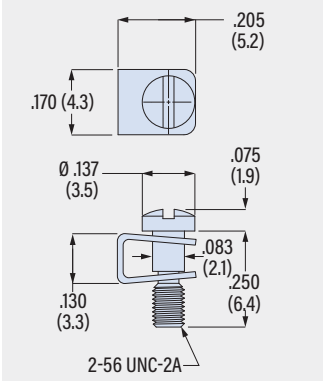

179-013-2H

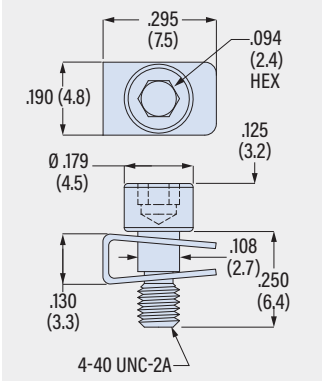

179-013-2S

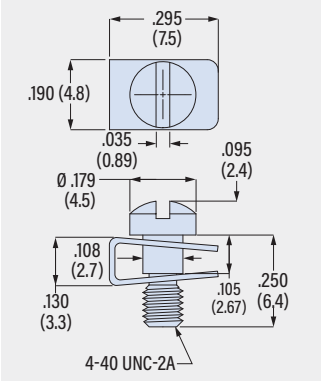

179-162-1H

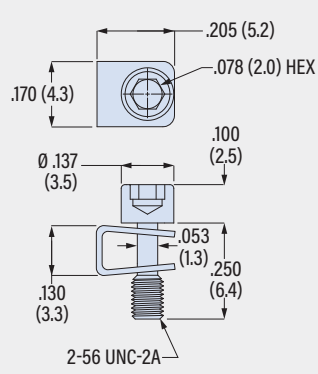

179-162-1S

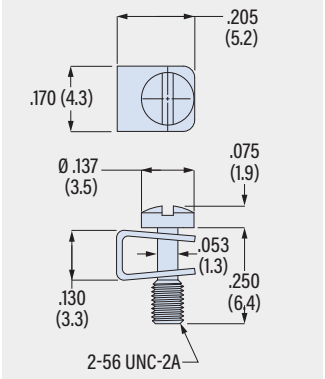

179-162-2H

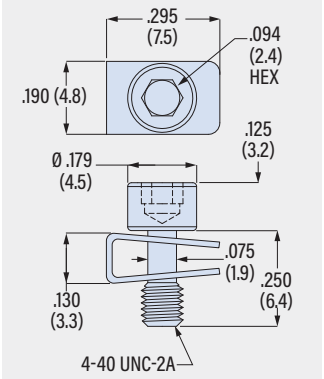

179-162-2S

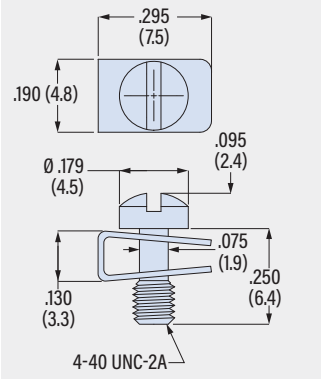

Jackpost Kits
For Micro-D Connectors

- Mil Spec and Extended Length
- Fits M83513 and MWDM Micro-D

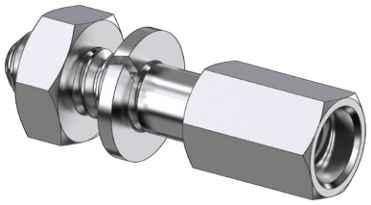

Stainless steel jackpost kits fit M83513 and MWDM Micro-D connectors. Two thread sizes: 2-56 for size 9 to 69, 4-40 for sizes 79, 100 and 130. Kit consists of (2) female posts. (2) hex nuts and (2) lockwashers. Passivated 300 series stainless steel.

JACKPOST KIT *with (2) posts, (2) nuts and (2) lockwashers*

A Thread Size	Micro-D Size	L Length in	L Length mm	Part No.	MIL Part Number
2-56	9-69	.288	7.3	080-00-00-100	M83513/05-07
		.500	12.7	500-069-2-1	
		.625	15.9	500-069-2-2	
		.750	19.1	500-069-2-3	
		.875	22.2	500-069-2-4	
		1.000	25.4	500-069-2-5	
4-40	75-130	.295	7.5	080-00-00-101	M83513/05-17
		.500	12.7	500-069-4-1	
		.625	15.9	500-069-4-2	
		.750	19.1	500-069-4-3	
		.875	22.2	500-069-4-4	
		1.000	25.4	500-069-4-5	

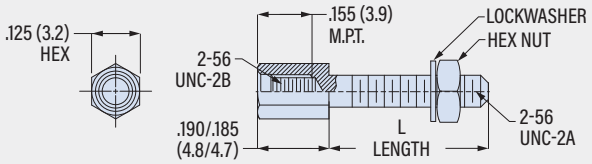

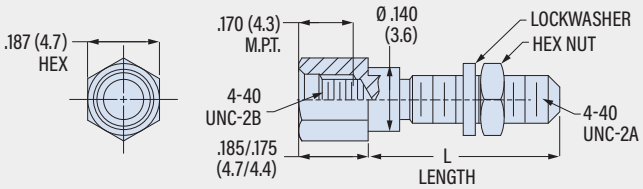

© 2024 Glenair, Inc • 1211 Air Way, Glendale, CA 91201 • 818-247-6000 • www.glenair.com • U.S. CAGE code 06324 • Rectangular Accessories
Dimensions in Inches (millimeters) are subject to change without notice.

177-504, 179-221

Jackpost Kit, Rear Panel Mount

- Rear Panel Mount
- Fits M83513 and MWDM Micro-D

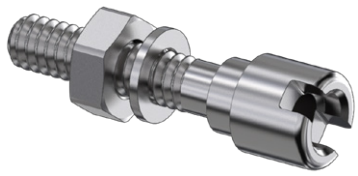

Rear panel mount jackpost kits fit M83513 and MWDM Micro-D connectors. Two thread sizes: 2-56 for size 9 to 69, 4-40 for sizes 79, 100 and 130. Kit consists of (2) female posts, (2) hex nuts and (2) lockwashers. For panel thicknesses from 1/32 to 1/8 inch. Passivated 300 series stainless steel.

REAR PANEL MOUNT JACKPOST KIT *with (2) posts, (2) nuts and (2) lockwashers*

A Thread Size	Micro-D Size	Panel Thickness in	Panel Thickness mm	L Length (OAL) in	L Length (OAL) mm	Part No.	K ± .003 (0.08) in	K ± .003 (0.08) mm
2-56	9-69	1/32	0.8	.475	12.1	177-504-2-2	.024	0.61
				.600	15.2	179-221-2-2-3		
		3/64	1.2	.475	12.1	177-504-2-3	.041	1.04
				.600	15.2	179-221-2-3-3		
		1/16	1.6	.475	12.1	177-504-2-4	.055	1.40
				.600	15.2	179-221-2-4-3		
		.080	2.0	.475	12.1	177-504-2-7	.073	1.85
				.600	15.2	179-221-2-7-3		
		3/32	2.4	.475	12.1	177-504-2-5	.086	2.18
				.600	15.2	179-221-2-5-3		
		1/8	3.2	.475	12.1	177-504-2-6	.118	3.00
				.600	15.2	179-221-2-6-3		
4-40	75-130	1/32	0.8	.475	12.1	177-504-4-2	.024	0.61
				.600	15.2	179-221-4-2-3		
		3/64	1.2	.475	12.1	177-504-4-3	.041	1.04
				.600	15.2	179-221-4-3-3		
		1/16	1.6	.475	12.1	177-504-4-4	.055	1.40
				.600	15.2	179-221-4-4-3		
		.080	2.0	.475	12.1	177-504-4 -7	.073	1.85
				.600	15.2	179-221-4-7-3		
		3/32	2.4	.475	12.1	177-504-4-5	.086	2.18
				.600	15.2	179-221-4-5-3		
		1/8	3.2	.475	12.1	177-504-4-6	.118	3.00
				.600	15.2	179-221-4-6-3		

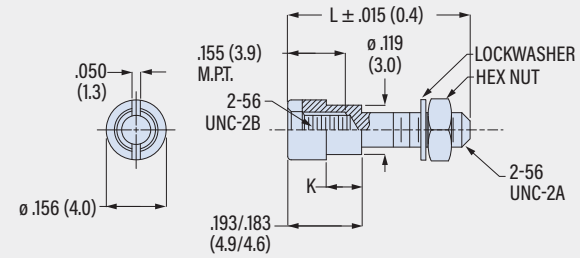

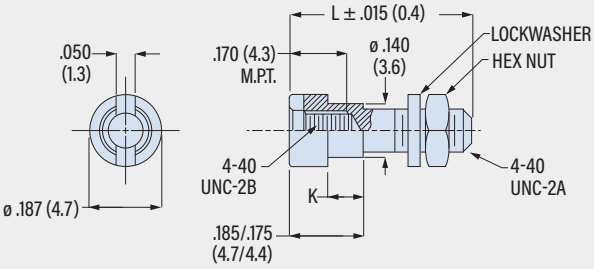

RECOMMENDED PANEL CUTOUT FOR REAR PANEL MOUNT MICRO-D CONNECTORS

Shell Size	C ± .005 (0.13) in	C mm	D ± .005 (0.13) in	D mm	E ± .005 (0.13) in	E mm	G in	G mm
09	.406	10.3	.565	14.4	.256	6.5	.125	3.2
15	.556	14.1	.715	18.2	.256	6.5	.125	3.2
21	.706	17.9	.865	22.0	.256	6.5	.125	3.2
25	.806	20.5	.965	24.5	.256	6.5	.125	3.2
31	.956	24.3	1.115	28.3	.256	6.5	.125	3.2
37	1.106	28.1	1.265	32.1	.256	6.5	.125	3.2
51	1.056	26.8	1.215	30.9	.300	7.6	.125	3.2
100	1.520	38.6	1.800	45.7	.406	10.3	.147	3.7

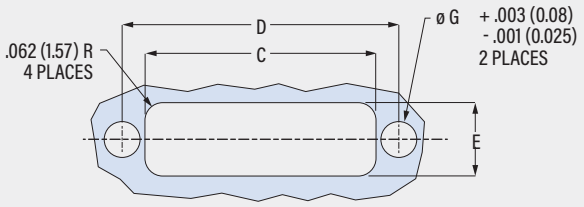

© 2024 Glenair, Inc • 1211 Air Way, Glendale, CA 91201 • 818-247-6000 • www.glenair.com • U.S. CAGE code 06324 • Rectangular Accessories
Dimensions in Inches (millimeters) are subject to change without notice.

177-505
Jackpost Kit, Rear Panel Mount PCB

- For MWDM Types BS, BR and CBR
- Rear Panel Mount

Rear panel mount jackpost kit fits MWDM printed circuit board connectors types BS, BR and CBR. Two thread sizes: 2-56 for size 9 to 69, 4-40 for sizes 75, 100 and 130. For panel thicknesses from 1/32 to 1/8 inch. Passivated 300 series stainless steel.

Install with threadlocking compound.

Kit consists of (2) female posts.

REAR PANEL MOUNT PCB JACKPOST KIT *with (2) posts*

A Thread Size	Micro-D Size	Connector Type	Panel Thickness in	Panel Thickness mm	Part No.	F ± .003 (0.08) in	F ± .003 (0.08) mm	H ± .015 (0.4) in	H ± .015 (0.4) mm
2-56	9-69	BS, CBR	1/32	0.8	177-505-A-2-2	.024	0.61	.365	9.3
			3/64	1.2	177-505-A-2-3	.041	1.04		
			1/16	1.6	177-505-A-2-4	.055	1.40		
			.080	2.0	177-505-A-2-7	.073	1.85		
			3/32	2.4	177-505-A-2-5	.086	2.18		
			1/8	3.2	177-505-A-2-6	.118	3.00		
	9-51	BR	1/32	0.8	177-505-B-2-2	.024	0.61	.398	10.1
			3/64	1.2	177-505-B-2-3	.041	1.04		
			1/16	1.6	177-505-B-2-4	.055	1.40		
			.080	2.0	177-505-B-2-7	.073	1.85		
			3/32	2.4	177-505-B-2-5	.086	2.18		
			1/8	3.2	177-505-B-2-6	.118	3.00		
4-40	75-130	BR, CBR	1/32	0.8	177-505-C-4-2	.024	0.61	.475	12.1
			3/64	1.2	177-505-C-4-3	.041	1.04		
			1/16	1.6	177-505-C-4-4	.055	1.40		
			.080	2.0	177-505-C-4-7	.073	1.85		
			3/32	2.4	177-505-C-4-5	.086	2.18		
			1/8	3.2	177-505-C-4-6	.118	3.00		
	100	BS	1/32	0.8	177-505-D-4-2	.024	0.61	.360	9.1
			3/64	1.2	177-505-D-4-3	.041	1.04		
			1/16	1.6	177-505-D-4-4	.055	1.40		
			.080	2.0	177-505-D-4-7	.073	1.85		
			3/32	2.4	177-505-D-4-5	.086	2.18		
			1/8	3.2	177-505-D-4-6	.118	3.00		

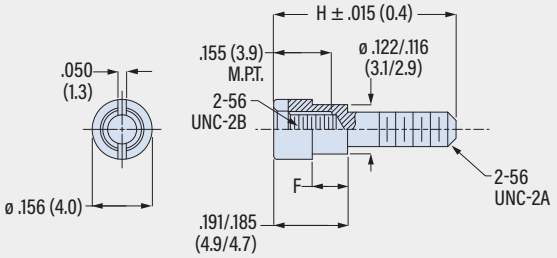

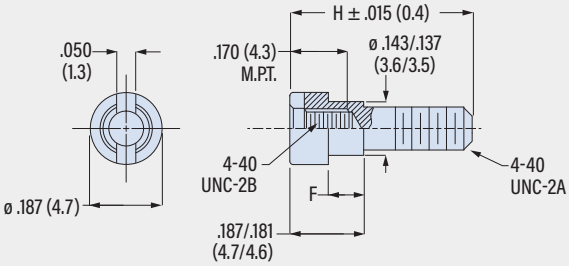

RECOMMENDED PANEL CUTOUT FOR REAR PANEL MOUNT MICRO-D CONNECTORS

Shell Size	C ± .005 (0.13) in	C ± .005 (0.13) mm	D ± .005 (0.13) in	D ± .005 (0.13) mm	E ± .005 (0.13) in	E ± .005 (0.13) mm	G in	G mm
09	.406	10.3	.565	14.4	.256	6.5	.125	3.2
15	.556	14.1	.715	18.2	.256	6.5	.125	3.2
21	.706	17.9	.865	22.0	.256	6.5	.125	3.2
25	.806	20.5	.965	24.5	.256	6.5	.125	3.2
31	.956	24.3	1.115	28.3	.256	6.5	.125	3.2
37	1.106	28.1	1.265	32.1	.256	6.5	.125	3.2
51	1.056	26.8	1.215	30.9	.300	7.6	.125	3.2
100	1.520	38.6	1.800	45.7	.406	10.3	.147	3.7

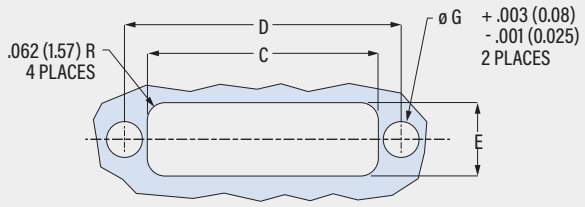

© 2024 Glenair, Inc • 1211 Air Way, Glendale, CA 91201 • 818-247-6000 • www.glenair.com • U.S. CAGE code 06324 • Rectangular Accessories
Dimensions in Inches (millimeters) are subject to change without notice.

500-015, 687-152, 687-439, 687-695

Replacement Hardware for Micro-D Backshells with .175" Flange

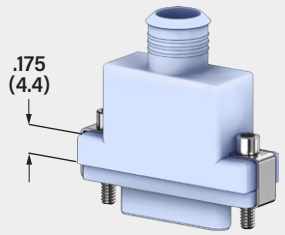

Replacement hardware on this page fits solid Micro-D backshells with .175 flange

1 Fillister Head

2 Socket Head

3 Extended

4 Female Post

5 Clip

Order (2) per backshell. Replacement screws and retainer clips fit Micro-D backshells with .175 (4.4) flange height. Two thread sizes: 2-56 for size 9 to 69, 4-40 for sizes 75, 100 and 130. Male screws are available in (3) styles: slotted fillister head, hex drive socket head, or extended length slotted. Stainless steel screws, washers, and retainer clips.

Clips, Screwlocks and Jackscrews

CLIP
CLIP HAS CIRCULAR HOLE AND SQUARE HOLE.

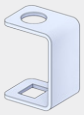

SCREWLOCK
SQUARE HOLE IS ON THE TOP. SCREW IS FLOATING. MATE CONNECTORS FIRST, THEN FASTEN SCREWLOCKS.

JACKSCREW
SQUARE HOLE IS ON THE BOTTOM. SCREW IS CAPTIVE. TURN SCREWS TO JACK CONNECTORS TOGETHER.

1 2 3 JACKSCREWS AND MALE SCREWLOCKS

Figure	Style	Type	Thread Size	Connector Size	Kit with (1) Screw, (1) Clip	Screw Only	Length in	Length mm
1	Fillister Head	Screwlock	2-56	9-69	687-152-01BF	687-152-01BFL		
			4-40	75, 100, 130	687-152-02BF	687-152-02BFL		
		Jackscrew	2-56	9-69	500-015-1S	500-015-1SL		
			4-40	75, 100, 130	500-015-2S	500-015-2SL		
2	Socket Head	Screwlock	2-56	9-69	500-015-1F	500-015-1FL		
			4-40	75, 100, 130	500-015-2F	500-015-2FL		
		Jackscrew	2-56	9-69	500-015-1H	500-015-1HL		
			4-40	75, 100, 130	500-015-2H	500-015-2HL		
3	Extended	Screwlock	2-56	9	687-439-09FC	687-439-09F	1.04	26.4
				15	687-439-15FC	687-439-15F	1.17	29.7
				21	687-439-21FC	687-439-21F	1.29	32.8
				25	687-439-25FC	687-439-25F	1.35	34.3
				31	687-439-31FC	687-439-31F	1.42	36.1
				37	687-439-37FC	687-439-37F	1.45	36.8
				51 to 69	687-439-51FC	687-439-51F	1.48	37.6
			4-40	75, 100, 130	687-439-100FC	687-439-100F	1.58	40.1
		Jackscrew	2-56	9	687-439-09	687-439-09J	1.04	26.4
				15	687-439-15	687-439-15J	1.17	29.7
				21	687-439-21	687-439-21J	1.29	32.8
				25	687-439-25	687-439-25J	1.35	34.3
				31	687-439-31	687-439-31J	1.42	36.1
				37	687-439-37	687-439-37J	1.45	36.8
				51 to 69	687-439-51	687-439-51J	1.48	37.6
			4-40	75, 100, 130	687-439-100	687-439-100J	1.58	40.1

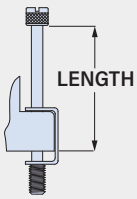

4 FEMALE JACKPOST

Fig.	Type	Thread Size	Connector Size	Part Number	Ordering Note
4	Female Hex Post	2-56	9-69	687-695	Kit contains (1) female hex post, (1) nut and (1) flat washer. Order (2) per backshell.
		4-40	75, 100, 130	687-695-1	

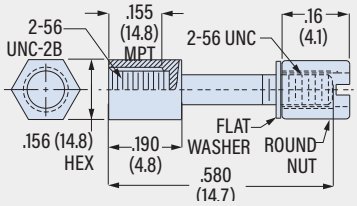

687-695

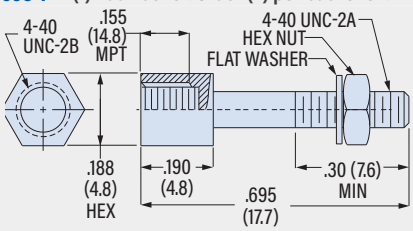

687-695-1

5 RETAINER CLIP

Figure	Thread Size	Connector Size	Retainer Clip Part Number
5	2-56	9-69	500-015-1
	4-40	75, 100, 130	500-015-2

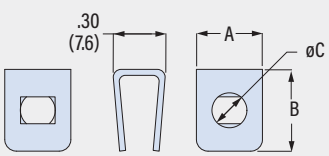

Part Number	A in	A mm	B in	B mm	ø C in	ø C mm
500-015-1	.172	4.4	.21	5.3	.090	2.3
500-015-2	.250	6.4	.32	8.1	.120	3.0

© 2024 Glenair, Inc • 1211 Air Way, Glendale, CA 91201 • 818-247-6000 • www.glenair.com • U.S. CAGE code 06324 • Rectangular Accessories
Dimensions in Inches (millimeters) are subject to change without notice.

000-01-(XX)-132

Micro-D Interfacial Seal

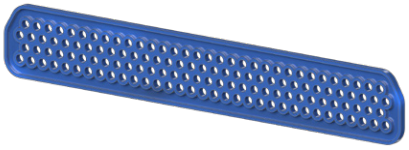

000-01-(XX)-132

This accessory fits MWDM socket connectors.

Micro-D interfacial seals fit metal shell Micro-D socket connectors. These fluorosilicone seals are intended for replacement of worn or damaged seals.

PART NUMBER

Size	Part No.	A in	A mm	B in	B mm
9S	000-01-09-132	.330	8.4	.180	4.6
15S	000-01-15-132	.480	12.2	.180	4.6
21S	000-01-21-132	.630	16.0	.180	4.6
25S	000-01-25-132	.730	18.5	.180	4.6
31S	000-01-31-132	.880	22.4	.180	4.6
37S	000-01-37-132	1.030	26.2	.180	4.6
51S	000-01-51-132	.976	24.8	.223	5.7
51-2S	000-01-15-143	1.380	35.0	.180	4.6
67S	000-01-67-132	1.780	45.2	.180	4.6
69S	000-01-69-132	1.276	32.4	.223	5.7
75S	000-01-75-132	1.376	35.0	.223	5.7
100S	000-01-00-132	1.386	35.2	.270	6.9
130S	000-01-30-132	1.736	44.1	.270	6.9

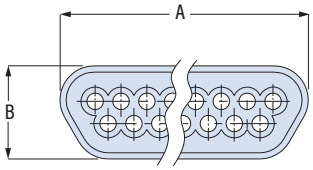

© 2024 Glenair, Inc • 1211 Air Way, Glendale, CA 91201 • 818-247-6000 • www.glenair.com • U.S. CAGE code 06324 • Rectangular Accessories
Dimensions in Inches (millimeters) are subject to change without notice.

179-135

EMI Gasket, Panel Mount

- For MWDM and M83513 Class M
- Conductive Fluorosilicone
- Rear Panel Mount

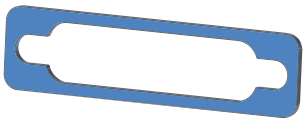

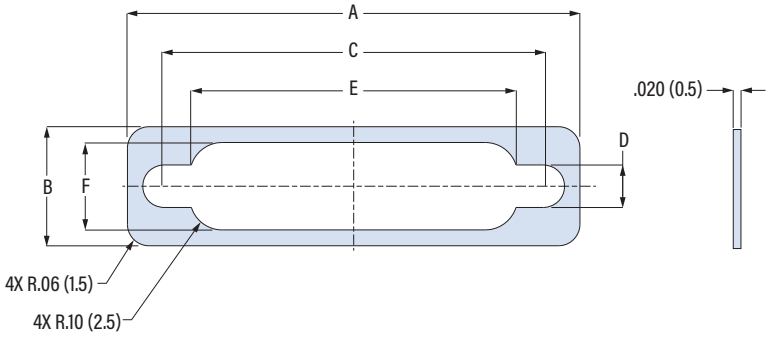

179-135

This accessory fits MWDM and M83513 Class M metal shell Micro-D connectors.

Rear mount, conductive. EMI panel gasket fits standard MWDM metal shell Micro-D connectors and M83513 Class M connectors. Gasket material is Chomerics CHO-Seal 1298 / MIL-DTL-83528 Type D. Install gasket between Micro-D flange and mounting panel for improved electrical bonding and environmental protection.

- Ag/Al filled fluorosilicone
- CHO-Seal 1298
- MIL-DTL-83528 Type D
- +200 °C
- ASTM E595 TML 0.12% CVCM 0.02%

PART NUMBER

Size	Part No.	A in	A mm	B in	B mm	C in	C mm	D in	D mm	E in	E mm	F in	F mm
9	179-135-9-T	.78	19.8	.35	8.9	.565	14.4	.125	3.2	.41	10.4	.26	6.6
15	179-135-15-T	.93	23.6	.35	8.9	.715	18.2	.125	3.2	.56	14.2	.26	6.6
21	179-135-21-T	1.08	27.4	.35	8.9	.865	22.0	.125	3.2	.71	18.0	.26	6.6
25	179-135-25-T	1.18	30.0	.35	8.9	.965	24.5	.125	3.2	.81	20.6	.26	6.6
31	179-135-31-T	1.33	33.8	.35	8.9	1.115	28.3	.125	3.2	.96	24.4	.26	6.6
37	179-135-37-T	1.48	37.6	.35	8.9	1.265	32.1	.125	3.2	1.11	28.2	.26	6.6
51-2	179-135-51-2-T	1.83	46.5	.35	8.9	1.615	41.0	.125	3.2	1.46	37.1	.26	6.6
51	179-135-51-T	1.43	36.3	.44	11.2	1.215	30.9	.125	3.2	1.06	26.9	.31	7.9
69	179-135-69-T	1.73	43.9	.44	11.2	1.515	38.5	.125	3.2	1.36	34.5	.31	7.9
75	179-135-75-T	2.07	52.6	.44	11.2	1.705	43.3	.146	3.7	1.46	37.1	.31	7.9
100	179-135-100-T	2.16	54.9	.55	14.0	1.800	45.7	.146	3.7	1.46	37.1	.36	9.1

507-035
Potting Backshell

507-035

This accessory fits MWDM and M83513 Class M metal shell Micro-D connectors

507-035 backshell fits MIL-DTL-83513 Class M and Glenair MWDM Micro-D connectors with metal shell. Fill backshell with potting compound to encapsulate solder joints and provide wire strain relief. Aluminum or stainless steel with passivated stainless steel screws and retainer clips.

TABLE 1
JACKSCREW OPTIONS

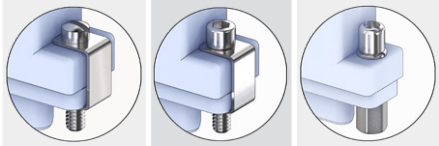

No Designator	H	F
Fillister Head Jackscrews	Socket Head Jackscrews	Female Jackposts

PART NUMBER

Sample PN➜ **507-035 M 51 H 1**

Base P/N	**507-035**
Material / Finish	**TZ** Tin-Zinc **JF** Alum / Cadmium w/ Yellow Chromate **M** Alum / Electroless Nickel **MT** Alum / Nickel-PTFE **ZR** Alum / Black Zinc-Nickel **Z1** SST / Passivated **Z2** Alum / Gold
Shell Size	**09 15 21 25 31 37 51 51-2 67 69 100 130**
Jackscrews *(Table 1)*	***Omit*** Fillister Head Male Jackscrews **H** Socket Head Male Jackscrews **F** Female Jackposts (fixed)
Height	***Omit*** Standard Height .19 (4.8) **1** Extended Height .29 (7.4)

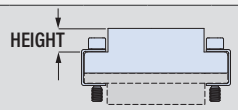

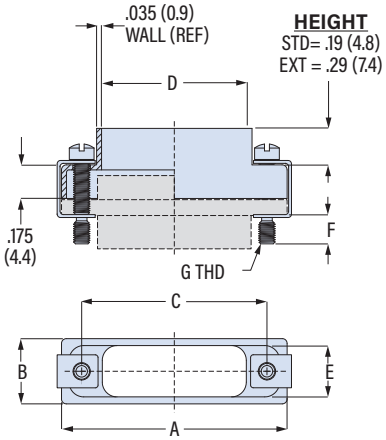

Size	A Max. in	A Max. mm	B Max in	B Max mm	C in	C mm	D in	D mm	E in	E mm	F Ref in	F Ref mm	G Thd UNC-2A
09	.850	21.6	.370	9.4	.565	14.4	.31	7.9	.26	6.6	.154	3.9	2-56
15	1.000	25.4	.370	9.4	.715	18.2	.48	12.2	.26	6.6	.154	3.9	2-56
21	1.150	29.2	.370	9.4	.865	22.0	.65	16.5	.26	6.6	.154	3.9	2-56
25	1.250	31.8	.370	9.4	.965	24.5	.75	19.1	.26	6.6	.154	3.9	2-56
31	1.400	35.6	.370	9.4	1.115	28.3	.88	22.4	.26	6.6	.154	3.9	2-56
37	1.550	39.4	.370	9.4	1.265	32.1	1.03	26.2	.26	6.6	.154	3.9	2-56
51	1.500	38.1	.410	10.4	1.215	30.9	.98	24.9	.30	7.6	.154	3.9	2-56
51-2	1.910	48.5	.370	9.4	1.615	41.0	1.38	35.1	.28	7.1	.154	3.9	2-56
67	2.310	58.7	.370	9.4	2.015	51.2	1.78	45.2	.26	6.6	.154	3.9	2-56
69	1.810	46.0	.410	10.4	1.515	38.5	1.28	32.5	.30	7.6	.154	3.9	2-56
100	2.235	56.8	.460	11.7	1.800	45.7	1.35	34.3	.36	9.1	.184	4.7	4-40
130	2.595	65.9	.460	11.7	2.150	54.6	1.71	43.4	.36	9.1	.184	4.7	4-40

© 2024 Glenair, Inc • 1211 Air Way, Glendale, CA 91201 • 818-247-6000 • www.glenair.com • U.S. CAGE code 06324 • Rectangular Accessories
Dimensions in Inches (millimeters) are subject to change without notice.

500-016
Shorting Cap Backshell

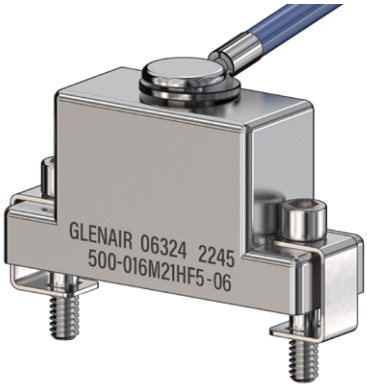

500-016

This accessory fits MWDM and M83513 Class M metal shell Micro-D connectors.

500-016 shorting cap fits M83513 Class M and MWDM Micro-D connectors. Closed backshell is available with lanyard for panel or cable attachment. Aluminum with stainless steel screws and washers.

TABLE 2
ATTACHMENT TYPE

F
Wire Rope, Nylon Jacket
6/6 nylon over stainless steel rope, fair flexibility, good abrasion resistance, -55 to +100 °C

G
Black Nylon Rope
Very flexible, good abrasion and fuel resistance, .062 (1.6) diameter, -55 to +100 °C

H
Wire Rope, Clear FEP Jacket
Clear FEP jacket over SST rope, fair flexibility, good abrasion resistance, .100" diameter, -65 to +200 °C

S
Wire Rope, Black Nylon Jacket
6/6 nylon over stainless steel rope, .034 (0.9) diameter, good flexibility, good abrasion resistance, -55 to +100 °C

T
SST Wire Rope, No Jacket
Good flexibility, good abrasion resistance, .047 (1.2) diameter, passivated, -65 to +200 °C

PART NUMBER

Sample PN➜ **500-016 Z2 51 H F 6 -06**

Base P/N	**500-016**
Material / Finish	**TZ** Tin-Zinc **JF** Alum / Cadmium w/ Yel. Chromate **M** Alum / Electroless Nickel **MT** Alum / Nickel-PTFE **ZR** Alum / Black Zinc-Nickel **Z2** Alum / Gold
Shell Size	**09 15 21 25 31 37 51 51-2 67 69 100**
Jackscrews *(Table 1)*	**B** Fillister Head Male **E** Extended Male **F** Female Jackpost **H** Socket Head Male
Attachment Type *(Table 2)*	**N** No Attachment *See Table 2 for attachment types*
Attachment Length	*Omit If No Attachment* Length in One Inch Increments
Attachment Fitting *(Table 3)*	*Omit If No Attachment* **-00** No Fitting *See Table 3 for attachment fittings*

TABLE 1 JACKSCREW OPTIONS

B Fillister Head
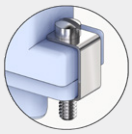

H Socket Head
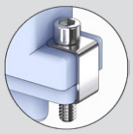

E Extended Slotted

F Female Post
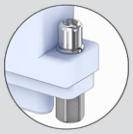

TABLE 3 ATTACHMENT FITTING

Ring
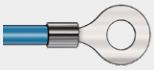

Code	Ring I.D.
-06	.125 (3.2)
-01	.140 (3.6)
-02	.182 (4.6)
-04	.197 (5.0)

Slip/Crimp Sleeve

-SCS
Slip/Crimp Sleeve
For Attachment Type G Only
Sleeve is copper with black chromate

Crimp Ferrule
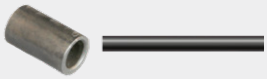

-CF
Crimp Ferrule
For Attachment Types G or S Only
Sleeve is copper with black chromate

500-016
Shorting Cap Backshell

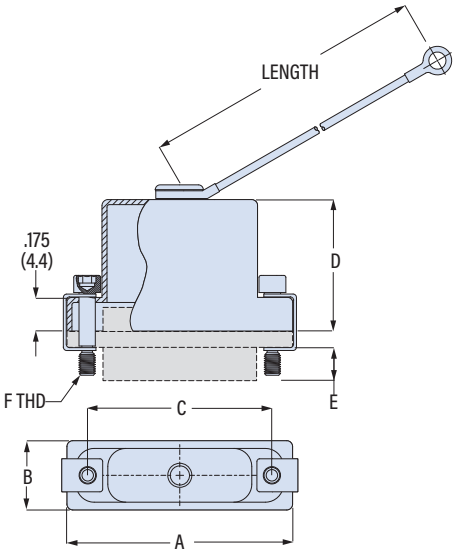

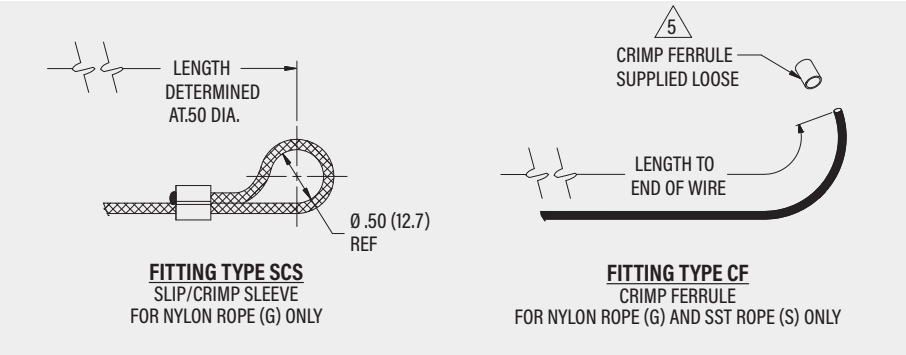

	A Max.		B Max		C		D Max		E Ref		F Thd
Size	in	mm	in	mm	in	mm	in	mm	in	mm	UNC-2
09	.850	21.6	.370	9.4	.565	14.4	.350	8.9	.154	3.9	2-56
15	1.000	25.4	.370	9.4	.715	18.2	.470	11.9	.154	3.9	2-56
21	1.150	29.2	.370	9.4	.865	22.0	.590	15.0	.154	3.9	2-56
25	1.250	31.8	.370	9.4	.965	24.5	.650	16.5	.154	3.9	2-56
31	1.400	35.6	.370	9.4	1.115	28.3	.710	18.0	.154	3.9	2-56
37	1.550	39.4	.370	9.4	1.265	32.1	.750	19.1	.154	3.9	2-56
51	1.500	38.1	.410	10.4	1.215	30.9	.780	19.8	.154	3.9	2-56
51-2	1.910	48.5	.370	9.4	1.615	41.0	.780	19.8	.154	3.9	2-56
67	2.310	58.7	.370	9.4	2.015	51.2	.780	19.8	.154	3.9	2-56
69	1.810	46.0	.410	10.4	1.515	38.5	.780	19.8	.154	3.9	2-56
100	2.235	56.8	.460	11.7	1.800	45.7	.840	21.3	.184	4.7	4-40

© 2024 Glenair, Inc • 1211 Air Way, Glendale, CA 91201 • 818-247-6000 • www.glenair.com • U.S. CAGE code 06324 • Rectangular Accessories
Dimensions in Inches (millimeters) are subject to change without notice.

500-010
EMI Banding Backshell

- Solid Backshell
- Band-Master ATS® Shield Termination
- Top, Side and 45° Entry

T Top Entry

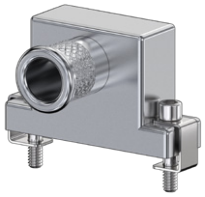
S Side Entry

E 45°Entry

D Dual 45°

500-010

This accessory fits MWDM and M83513 Class M metal shell Micro-D connectors.

EMI, banding. 500-010 backshell fits MIL-DTL-83513 Class M and Glenair MWDM Micro-D connectors. Terminate cable shield to backshell with BandMaster ATS band strap. Available with screwlocks or jackscrews: screwlocks allow connectors to be fully mated prior to fastening screws, jackscrews must be tightened in order to mate connectors. Aluminum or stainless steel with passivated stainless steel screws and retainer clips.

TABLE 1
SCREWLOCK OPTIONS

B BJ
Fillister Head

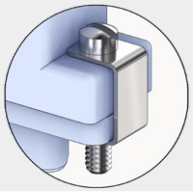

H HJ
Socket Head

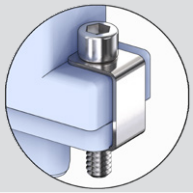

E EJ
Extended Slotted

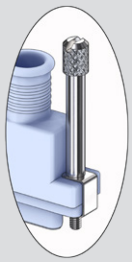

F
Female Post

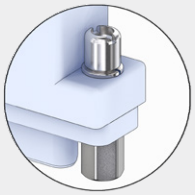

PART NUMBER

Sample PN➜ **500T010 M 37 H 07 S L**

Base P/N

500T010	T	Top Entry
500S010	S	Side Entry
500E010	E	45° Entry
500D010	D	Dual 45° Entry

Material / Finish

TZ	Tin-Zinc
JF	Alum / Cadmium w/ Yel. Chromate
M	Alum / Electroless Nickel
MT	Alum / Nickel-PTFE
ZR	Alum / Black Zinc-Nickel
Z1	SST / Passivated
Z2	Alum / Gold

Shell Size

09 15 21 25 31 37 51 51-2 67 69 75 100 130

Screwlocks *(Table 1)*

Male Screwlocks		Jackscrews	
B	Fillister Head	BJ	Fillister Head
H	Socket Head	HJ	Socket Head
E*	Extended Slotted*	EJ*	Extended Slotted*

Female Post
F Female Jackpost

* *E and EJ options available on Profiles S T only*

Entry Size

Entry Size	P Diameter	Shell Size T	S	E	D
04	.125 (3.2)	All	All	All	All
05	.156 (4.0)	All	All	All	All
06	.188 (4.8)	All	All	All	All
07	.219 (5.6)	All	All	All	15-up
08	.250 (6.4)	All	All	All	15-up
09	.281 (7.1)	All	All	31-up	31-up
10	.312 (7.9)	15-up	15-up	51, 69-up	51, 69-up
11	.344 (8.7)	100-up	15-up	100-up	100-up
12	.375 (9.5)	100-up	15-up	100-up	100-up

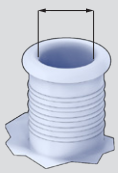

Qwik-Ty

Omit	No Qwik-Ty Strain Relief Arm
S	Qwik-Ty Arm Included

Band

Omit	No Band	L	Micro Band Included
K	Standard Band Included	J	Micro Slim Band Included
P	Slim Standard Band Included	N	Micro-Max Band Included

500-010
EMI Banding Backshell

- Solid Backshell
- Band-Master ATS® Shield Termination
- Top, Side and 45° Entry

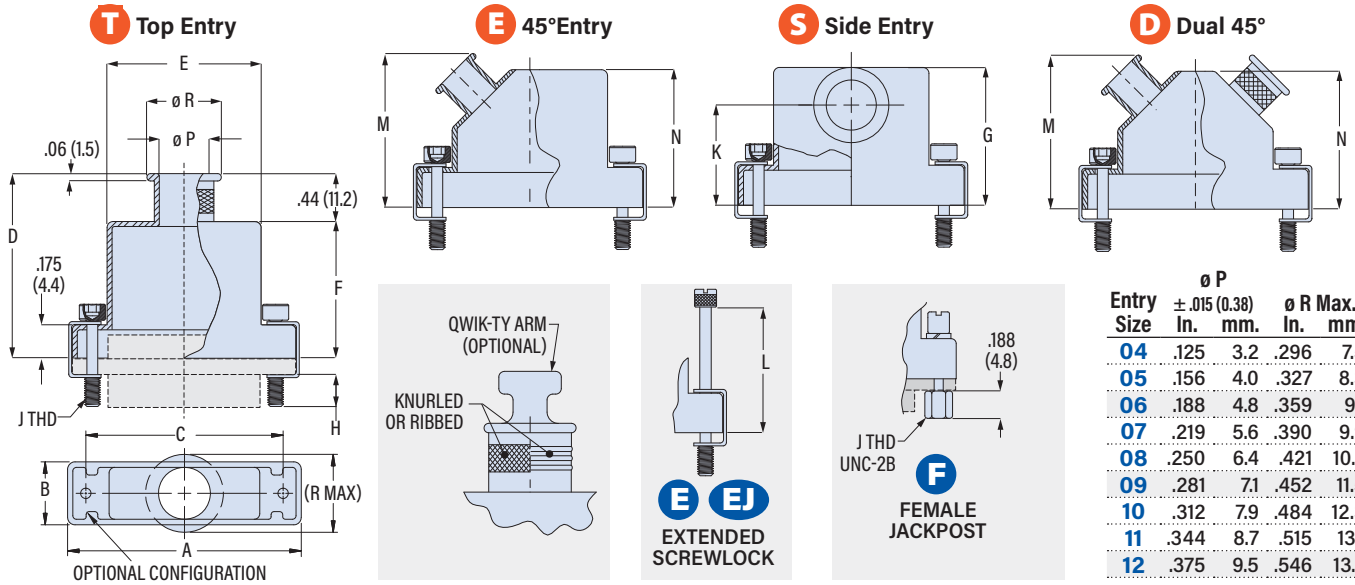

Entry Size	ø P ± .015 (0.38) In.	ø P ± .015 (0.38) mm.	ø R Max. In.	ø R Max. mm.
04	.125	3.2	.296	7.5
05	.156	4.0	.327	8.3
06	.188	4.8	.359	9.1
07	.219	5.6	.390	9.9
08	.250	6.4	.421	10.7
09	.281	7.1	.452	11.5
10	.312	7.9	.484	12.3
11	.344	8.7	.515	13.1
12	.375	9.5	.546	13.7

Size	A Max. in	A Max. mm	B Max in	B Max mm	C in	C mm	D Max in	D Max mm	E Max in	E Max mm	F Max in	F Max mm	G Max in	G Max mm	H Ref in	H Ref mm	J Thd UNC-2A	K in	K mm	L Max in	L Max mm	M Max in	M Max mm	N Max in	N Max mm
09	.850	21.6	.370	9.4	.565	14.4	.780	19.8	.410	10.4	.350	8.9	.637	16.2	.154	3.9	2-56	.435	11.0	1.040	26.4	1.288	32.7	.968	24.6
15	1.000	25.4	.370	9.4	.715	18.2	.910	23.1	.580	14.7	.470	11.9	.673	17.1	.154	3.9	2-56	.440	11.2	1.170	29.7	1.288	32.7	.968	24.6
21	1.150	29.2	.370	9.4	.865	22.0	1.030	26.2	.740	18.8	.590	15.0	.707	18.0	.154	3.9	2-56	.458	11.6	1.290	32.8	1.288	32.7	.968	24.6
25	1.250	31.8	.370	9.4	.965	24.5	1.090	27.7	.850	21.6	.650	16.5	.748	19.0	.154	3.9	2-56	.483	12.3	1.350	34.3	1.090	27.7	.830	21.1
31	1.400	35.6	.370	9.4	1.115	28.3	1.150	29.2	.980	24.9	.710	18.0	.756	19.2	.154	3.9	2-56	.476	12.1	1.420	36.1	1.130	28.7	.890	22.6
37	1.550	39.4	.370	9.4	1.265	32.1	1.190	30.2	1.130	28.7	.750	19.1	.774	19.7	.154	3.9	2-56	.478	12.1	1.450	36.8	1.230	31.2	.955	24.3
51	1.500	38.1	.410	10.4	1.215	30.9	1.220	31.0	1.080	27.4	.780	19.8	.859	21.8	.154	3.9	2-56	.548	13.9	1.480	37.6	1.250	31.8	1.005	25.5
51-2	1.910	48.5	.370	9.4	1.615	41.0	1.220	31.0	1.510	38.4	.780	19.8	.859	21.8	.154	3.9	2-56	.548	13.9	1.480	37.6	1.250	31.8	1.005	25.5
67	2.310	58.7	.370	9.4	2.015	51.2	1.220	31.0	1.880	47.8	.780	19.8	.859	21.8	.154	3.9	2-56	.548	13.9	1.480	37.6	1.250	31.8	1.005	25.5
69	1.810	46.0	.410	10.4	1.515	38.5	1.220	31.0	1.380	35.1	.780	19.8	.859	21.8	.154	3.9	2-56	.548	13.9	1.480	37.6	1.250	31.8	1.005	25.5
75	2.140	54.4	.410	10.4	1.705	43.3	1.220	31.0	1.470	37.3	.780	19.8	.859	21.8	.184	4.7	4-40	.548	13.9	1.480	37.6	1.250	31.8	1.005	25.5
100	2.235	56.8	.460	11.7	1.800	45.7	1.280	32.5	1.470	37.3	.840	21.3	1.014	25.8	.184	4.7	4-40	.687	17.4	1.580	40.1	1.320	33.5	1.080	27.4
130	2.595	65.9	.460	11.7	2.160	54.6	1.280	32.5	1.830	46.5	.840	21.3	1.014	25.8	.184	4.7	4-40	.687	17.4	1.580	40.1	1.320	33.5	1.080	27.4

MAXIMUM ENTRY SIZE

Shell Size	Top T	Side S	45° E	Dual 45° D
09	09	09	08	06
15	10	12	08	08
21	10	12	08	08
25	10	12	08	08
31	10	12	09	09
37	10	12	09	09
51	10	12	10	10
51-2	10	12	09	09
67	10	12	09	09
69	10	12	10	10
75	10	12	10	10
100	12	12	12	12
130	12	12	12	12

SCREWLOCKS AND JACKSCREWS

CLIP
CLIP HAS CIRCULAR HOLE AND SQUARE HOLE.

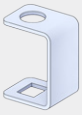

SCREWLOCK
SQUARE HOLE IS ON THE TOP. SCREW IS FLOATING. MATE CONNECTORS FIRST, THEN FASTEN SCREWLOCKS.

JACKSCREW
SQUARE HOLE IS ON THE BOTTOM. SCREW IS CAPTIVE. TURN SCREWS TO JACK CONNECTORS TOGETHER.

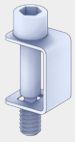

BAND OPTIONS

Terminate cable braid to backshell with optional band strap and banding tool. Pre-coiled bands are passivated stainless steel. Slim Standard bands have reduced thickness for weight reduction. Micro Slim bands have reduced thickness for weight reduction. Micro-Max bands are high-tension for lower-resistivity termination.

Band Type and Width	Hand Tool	Pneumatic
Standard: .24 (6.1)	601-100	601-106
Slim Standard: .24 (6.1)	601-109	601-110
Micro: .12 (3.0)	601-101	601-107
Micro Slim: .12 (3.0)	601-122	601-123
Micro-Max: .12 (3.0)	601-129	601-118

© 2024 Glenair, Inc • 1211 Air Way, Glendale, CA 91201 • 818-247-6000 • www.glenair.com • U.S. CAGE code 06324 • Rectangular Accessories
Dimensions in Inches (millimeters) are subject to change without notice.

500-011
EMI Braidsock Backshell

- Solid Backshell with Braidsock
- EMI Shielded
- Top, Side and 45° Entry

T Top Entry

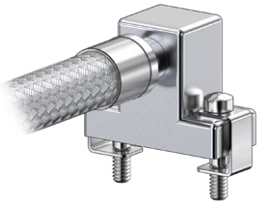

S Side Entry

E 45°Entry

500-011

This accessory fits MWDM and M83513 Class M metal shell Micro-D connectors

EMI, shield sock. 500-011 backshell fits MIL-DTL-83513 Class M and Glenair MWDM Micro-D connectors with metal shell. Supplied with tubular tinned copper braid. Aluminum or stainless steel with passivated stainless steel screws and retainer clips. Crimp ring is tin-plated copper.

EMI/RFI Shielding
INDUSTRY-STANDARD • METALLIC

- Soft-drawn tin-plated copper braid
- I.A.W. AA59569R36T
- EMI frequency effective to 1 GHz
- 150°C
- 90° Optical Coverage

TABLE 1
SCREWLOCK OPTIONS

B	H	F
Fillister Head	Socket Head	Female Post

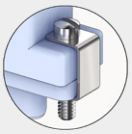
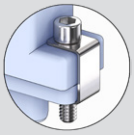
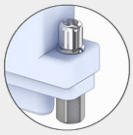

PART NUMBER

Sample PN➜ **500T011 M 51 H 08 -12**

Base P/N	500T011	T Top Entry
	500S011	S Side Entry
	500E011	E 45° Entry
Material / Finish	TZ	Tin-Zinc
	JF	Alum / Cadmium w/ Yel. Chromate
	M	Alum / Electroless Nickel
	MT	Alum / Nickel-PTFE
	ZR	Alum / Black Zinc-Nickel
	Z1	SST / Passivated
	Z2	Alum / Gold
Shell Size	09 15 21 25 31 37 51 51-2 67 69 100	
Screwlocks (Table 1)	B	Fillister Head Male
	H	Socket Head Male
	F	Female Jackpost

Entry Size

Entry Size	L Diameter	Shell Size
04	.125 (3.2)	All
05	.156 (4.0)	All
06	.188 (4.8)	All
07	.219 (5.6)	All
08	.250 (6.4)	All
09	.281 (7.1)	15-up
10	.312 (7.9)	51-up
11	.344 (8.7)	100
12	.375 (9.5)	100

Braid Length -12 Length in 1 inch increments. "-12" = 12 inches.

500-011
EMI Braidsock Backshell

- Solid Backshell with Braidsock
- EMI Shielded
- Top, Side and 45° Entry

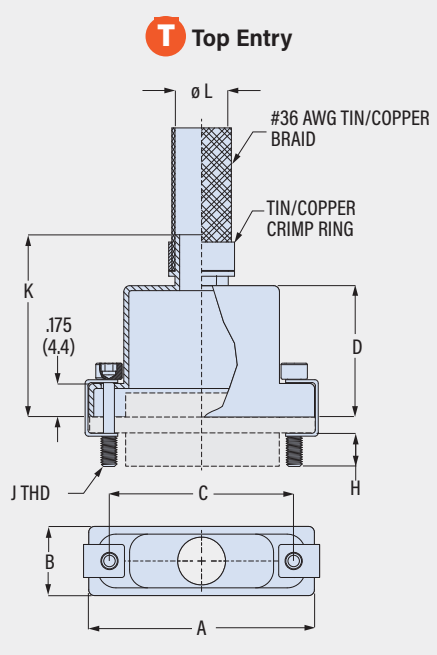

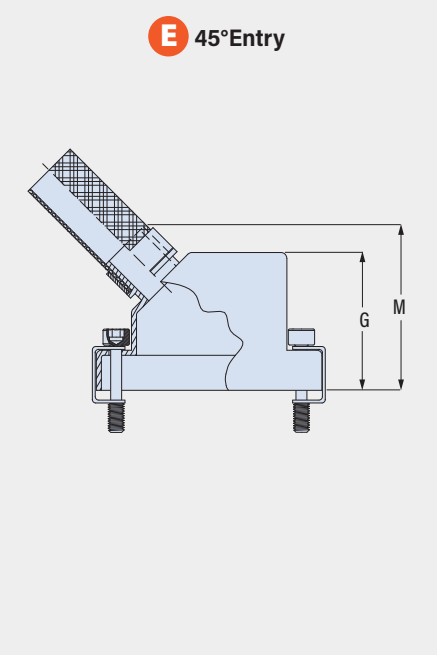

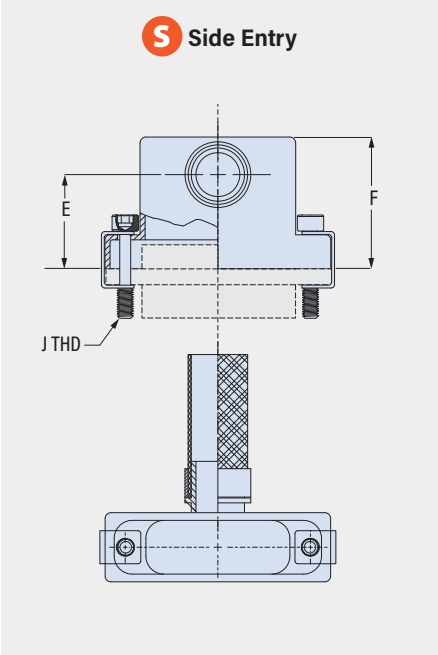

Size	A in	A mm	B in	B mm	C in	C mm	D in	D mm	E in	E mm	F in	F mm	G in	G mm	H Ref in	H Ref mm	J Thd UNC-2	K ± .03 (0.8) in	K ± .03 (0.8) mm	M Max in	M Max mm	Max Entry Size
09	.775	19.7	.36	9.1	.565	14.4	.32	8.1	.435	11.0	.607	15.4	.650	16.5	.154	3.9	2-56	.75	19.1	1.00	25.4	08
15	.925	23.5	.36	9.1	.715	18.2	.44	11.2	.440	11.2	.643	16.3	.700	17.8	.154	3.9	2-56	.88	22.4	1.03	26.2	08
21	1.075	27.3	.36	9.1	.865	22.0	.56	14.2	.458	11.6	.677	17.2	.735	18.7	.154	3.9	2-56	1.00	25.4	1.05	26.7	08
25	1.175	29.8	.36	9.1	.965	24.5	.62	15.7	.483	12.3	.718	18.2	.800	20.3	.154	3.9	2-56	1.06	26.9	1.09	27.7	08
31	1.325	33.7	.36	9.1	1.115	28.3	.68	17.3	.476	12.1	.726	18.4	.860	21.8	.154	3.9	2-56	1.12	28.4	1.13	28.7	09
37	1.475	37.5	.36	9.1	1.265	32.1	.72	18.3	.478	12.1	.744	18.9	.925	23.5	.154	3.9	2-56	1.16	29.5	1.16	29.5	09
51	1.425	36.2	.40	10.2	1.215	30.9	.75	19.1	.548	13.9	.829	21.1	.975	24.8	.154	3.9	2-56	1.19	30.2	1.19	30.2	10
51-2	1.835	46.6	.36	9.1	1.615	41.0	.75	19.1	.548	13.9	.829	21.1	.975	24.8	.154	3.9	2-56	1.19	30.2	1.19	30.2	10
67	2.230	56.6	.36	9.1	2.015	51.2	.75	19.1	.548	13.9	.829	21.1	.975	24.8	.154	3.9	2-56	1.19	30.2	1.19	30.2	10
69	1.730	43.9	.40	10.2	1.515	38.5	.75	19.1	.548	13.9	.829	21.1	.975	24.8	.154	3.9	2-56	1.19	30.2	1.19	30.2	10
100	2.160	54.9	.45	11.4	1.800	45.7	.81	20.6	.687	17.4	.984	25.0	1.050	26.7	.184	4.7	4-40	1.25	31.8	1.25	31.8	12

Entry Size	ø L Entry Dia. in	ø L Entry Dia. mm
04	.125	3.2
05	.156	4.0
06	.188	4.8
07	.219	5.6
08	.250	6.4
09	.281	7.1
10	.312	7.9
11	.344	8.7
12	.375	9.5

© 2024 Glenair, Inc • 1211 Air Way, Glendale, CA 91201 • 818-247-6000 • www.glenair.com • U.S. CAGE code 06324 • Rectangular Accessories
Dimensions in Inches (millimeters) are subject to change without notice.

507-088

EMI Banding Backshell, Composite

- Lightweight Composite
- Micro Band Shield Termination
- Top, Side and 45° Entry

T Top Entry

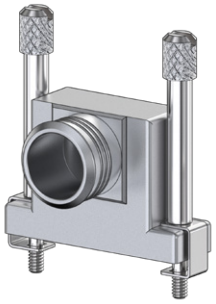

S Side Entry

E 45°Entry

507-088

This accessory fits MWDM and M83513 Class M metal shell Micro-D connectors

EMI, lightweight composite. 507-088 backshell fits MIL-DTL-83513 Class M and Glenair MWDM Micro-D connectors. Terminate cable shield to backshell with BandMaster ATS Micro band strap. Available with screwlocks or jackscrews: screwlocks allow connectors to be fully mated prior to fastening screws, jackscrews must be tightened in order to mate connectors. Nickel-plated thermoplastic with passivated stainless steel screws and retainer clips.

TABLE 1 SCREWLOCK OPTIONS

B BF
Fillister Head

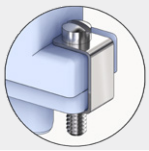

H HF
Socket Head

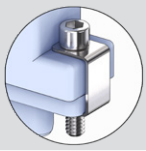

E
Extended Slotted

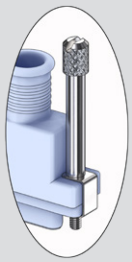

F
Female Post

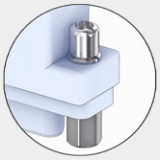

PART NUMBER

Sample PN➜ **507T088 XM 51 HF 09 S K**

Base P/N

507T088	T	Top Entry
507S088	S	Side Entry
507E088	E	45° Entry

Finish

XM	Electroless Nickel

Shell Size

09 15 21 25 31 37 51 100

Screwlocks *(Table 1)*

Male Screwlocks	
BF	Fillister Head
HF	Socket Head
Female Post	
F	Female Jackpost

Male Jackscrews	
B	Fillister Head
H	Socket Head
E*	Extended Slotted*

* *E option available on Profiles S T only*

Entry Size

Entry Size	K Diameter	Shell Size T	Shell Size S	Shell Size E
04	.125 (3.2)	All	All	All
05	.156 (4.0)	All	All	All
06	.188 (4.8)	All	All	All
07	.219 (5.6)	All	All	All
08	.250 (6.4)	All	All	All
09	.281 (7.1)	31-100	All	31-100
10	.312 (7.9)	51, 100	15-100	51, 100
11	.344 (8.7)	100	15-100	100
12	.375 (9.5)	100	15-100	100

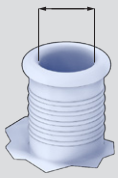

Qwik-Ty

Omit	No Qwik-Ty Arm
S	Qwik-Ty Strain Relief Arm

Band

Omit	No Band
K	Micro Band Included
J	Micro Slim Band Included

507-088
EMI Banding Backshell, Composite

- Lightweight Composite
- Micro Band Shield Termination
- Top, Side and 45° Entry

T Top Entry

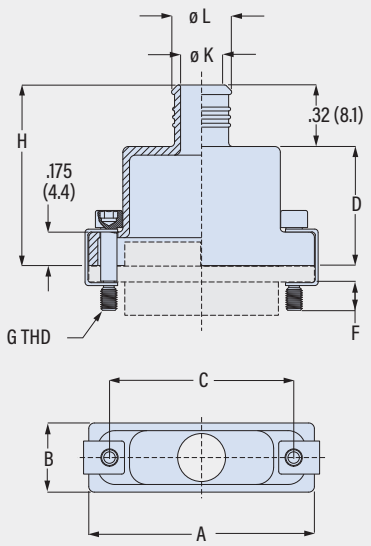

E 45°Entry

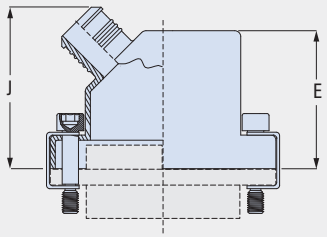

S Side Entry

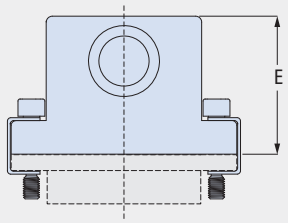

Entry Size	ø K in	ø K mm	ø L in	ø L mm
04	.125	3.2	.219	5.6
05	.156	4.0	.250	6.4
06	.188	4.8	.281	7.1
07	.219	5.6	.313	8.0
08	.250	6.4	.344	8.7
09	.281	7.1	.375	9.5
10	.312	7.9	.406	10.3
11	.344	8.7	.438	11.1
12	.375	9.5	.469	11.9

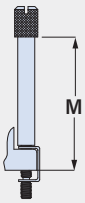

E EXTENDED JACKSCREW

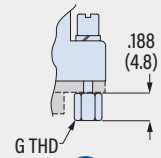

F FEMALE JACKPOST

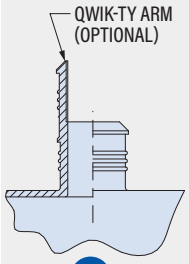

S QWIK-TY

Size	A in	A mm	B in	B mm	C in	C mm	D in	D mm	E in	E mm	F in	F mm	G Thd UNC-2	H ±.03(0.8) in	H ±.03(0.8) mm	J Max in	J Max mm	M Min in	M Min mm
09	.775	19.7	.36	9.1	.565	14.4	.43	10.9	.650	16.5	.154	3.9	2-56	.75	19.1	1.00	25.4	.75	19.1
15	.925	23.5	.36	9.1	.715	18.2	.44	11.2	.700	17.8	.154	3.9	2-56	.76	19.3	1.03	26.2	.76	19.3
21	1.075	27.3	.36	9.1	.865	22.0	.56	14.2	.735	18.7	.154	3.9	2-56	.88	22.4	1.05	26.7	.88	22.4
25	1.175	29.8	.36	9.1	.965	24.5	.62	15.7	.800	20.3	.154	3.9	2-56	.94	23.9	1.09	27.7	.94	23.9
31	1.325	33.7	.36	9.1	1.115	28.3	.68	17.3	.860	21.8	.154	3.9	2-56	1.00	25.4	1.13	28.7	1.00	25.4
37	1.475	37.5	.36	9.1	1.265	32.1	.72	18.3	.925	23.5	.154	3.9	2-56	1.04	26.4	1.16	29.5	1.04	26.4
51	1.425	36.2	.40	10.2	1.215	30.9	.75	19.1	.975	24.8	.154	3.9	2-56	1.07	27.2	1.25	31.8	1.07	27.2
100	2.160	54.9	.45	11.4	1.800	45.7	.81	20.6	1.050	26.7	.184	4.7	4-40	1.13	28.7	1.32	33.5	1.13	28.7

SCREWLOCKS AND JACKSCREWS

CLIP
CLIP HAS CIRCULAR HOLE AND SQUARE HOLE.

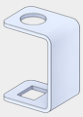

SCREWLOCK
SQUARE HOLE IS ON THE TOP. SCREW IS FLOATING. MATE CONNECTORS FIRST, THEN FASTEN SCREWLOCKS.

JACKSCREW
SQUARE HOLE IS ON THE BOTTOM. SCREW IS CAPTIVE. TURN SCREWS TO JACK CONNECTORS TOGETHER.

BAND OPTIONS

Terminate cable braid to backshell with optional band strap and banding tool. Pre-coiled bands are passivated stainless steel. Micro Slim bands have reduced thickness for weight reduction.

Band Type and Width	Hand Tool	Pneumatic Tool
Micro: .12 (3.0)	601-101	601-107
Micro Slim: .12 (3.0)	601-122	601-123

© 2024 Glenair, Inc • 1211 Air Way, Glendale, CA 91201 • 818-247-6000 • www.glenair.com • U.S. CAGE code 06324 • Rectangular Accessories
Dimensions in Inches (millimeters) are subject to change without notice.

507-142

EMI Banding Backshell, Dual Entry

- Solid Backshell
- Band-Master ATS® Shield Termination
- Two Band Platforms

507-142

This accessory fits MWDM and M83513 Class M metal shell Micro-D connectors

EMI, dual entry. 507-142 backshell fits MIL-DTL-83513 Class M and Glenair MWDM Micro-D connectors with metal shell. Two band platforms. Aluminum with passivated stainless steel screws and retainer clips.

PART NUMBER

Sample PN➜ **507-142 JF 31 B P**

Base P/N	507-142	
Finish	TZ	Tin-Zinc
	JF	Cadmium w/ Yellow Chromate
	M	Electroless Nickel
	MT	Nickel-PTFE
	ZR	Black Zinc-Nickel
	Z2	Gold
Shell Size	21 25 31 37 51 51-2 69 100	
Jackscrews (Table 1)	B	Fillister Head Male Jackscrews
	F	Female Jackposts (fixed)
	H	Socket Head Male Jackscrews
Band	*Omit*	No Band
	K	Standard Bands Included
	P	Slim Standard Bands Included
	M	Micro Bands Included
	J	Micro Slim Bands Included
	L	Micro-Max Bands Included

TABLE 1 JACKSCREW OPTIONS

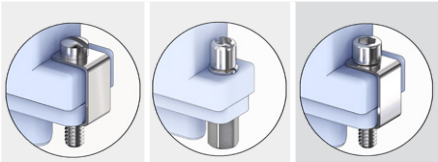

B	F	H
Fillister Head Jackscrews	Female Jackposts	Socket Head Jackscrews

BAND OPTIONS

Terminate cable braid to backshell with optional band strap and banding tool. Pre-coiled bands are passivated stainless steel. Slim Standard bands have reduced thickness for weight reduction. Micro Slim bands have reduced thickness for weight reduction. Micro-Max bands are high-tension for lower-resistivity termination.

Band Type and Width	Hand Tool	Pneumatic
Standard: .24 (6.1)	601-100	601-106
Slim Standard: .24 (6.1)	601-109	601-110
Micro: .12 (3.0)	601-101	601-107
Micro Slim: .12 (3.0)	601-122	601-123
Micro-Max: .12 (3.0)	601-129	601-118

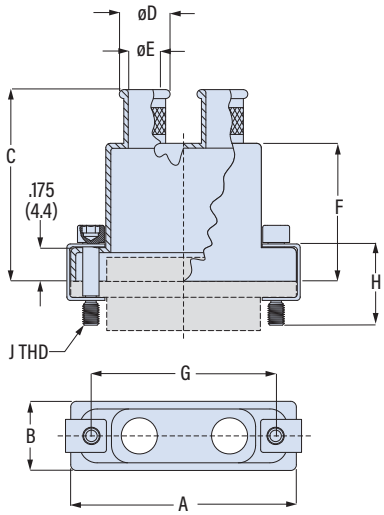

Size	A in	A mm	B in	B mm	C in	C mm	D in	D mm	E in	E mm	F in	F mm	G in	G mm	H in	H mm	J Thd UNC-2
21	1.075	27.3	.34	8.6	1.00	25.4	.281	7.1	.125	3.2	.56	14.2	.865	22.0	.438	11.1	2-56
25	1.175	29.8	.34	8.6	1.06	26.9	.344	8.7	.188	4.8	.62	15.7	.965	24.5	.438	11.1	2-56
31	1.325	33.7	.34	8.6	1.12	28.4	.406	10.3	.250	6.4	.68	17.3	1.115	28.3	.438	11.1	2-56
37	1.475	37.5	.34	8.6	1.16	29.5	.500	12.7	.344	8.7	.72	18.3	1.265	32.1	.438	11.1	2-56
51	1.425	36.2	.38	9.7	1.19	30.2	.469	11.9	.312	7.9	.75	19.1	1.215	30.9	.438	11.1	2-56
51-2	1.835	46.6	.36	9.1	1.19	30.2	.469	11.9	.281	7.1	.75	19.1	1.615	41.0	.438	11.1	2-56
69	1.730	43.9	.40	10.2	1.19	30.2	.469	11.9	.312	7.9	.75	19.1	1.515	38.5	.438	11.1	2-56
100	2.160	54.9	.45	11.4	1.25	31.8	.688	17.5	.500	12.7	.81	20.6	1.800	45.7	.469	11.9	4-40

© 2024 Glenair, Inc • 1211 Air Way, Glendale, CA 91201 • 818-247-6000 • www.glenair.com • U.S. CAGE code 06324 • Rectangular Accessories
Dimensions in Inches (millimeters) are subject to change without notice.

500-047
EMI Banding Backshell, Elliptical Entry

- Solid Backshell
- Band-Master ATS® Shield Termination
- Elliptical Entry

500-047

This accessory fits MWDM and M83513 Class M metal shell Micro-D connectors

EMI, elliptical entry. 500-047 backshell fits MIL-DTL-83513 Class M and Glenair MWDM Micro-D connectors with metal shell. Terminate cable shield to backshell with BandMaster ATS band strap. Available with screwlocks or jackscrews: screwlocks allow connectors to be fully mated prior to fastening screws, jackscrews must be tightened in order to mate connectors. Aluminum or stainless steel with passivated stainless steel screws and retainer clips.

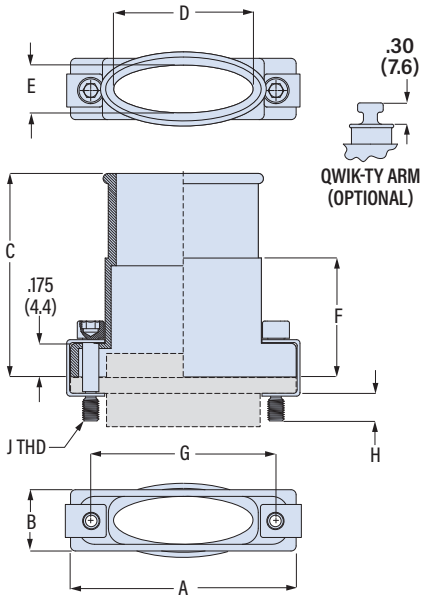

PART NUMBER

Sample PN➜ 500-047 M 21 B B T

Base P/N	**500-047**
Material / Finish	**TZ** Tin-Zinc **JF** Alum / Cadmium w/ Yellow Chromate **M** Alum / Electroless Nickel **MT** Alum / Nickel-PTFE **ZR** Alum / Black Zinc-Nickel **Z1** SST / Passivated
Shell Size	**09 15 21 25 31 37 51 51-2 67 69 75 100 130**
Screwlocks *(Table 1)*	**B** Fillister Head Male Screwlocks **E** Extended Slotted Male Screwlocks **F** Female Screwlocks (fixed) **H** Socket Head Male Screwlocks **HJ** Socket Head Male Jackscrews
Band	***Omit*** No Band **B** Standard Band Included **P** Slim Standard Band Included **M** Micro Band Included **J** Micro Slim Band Included **L** Micro-Max Band Included
Qwik-Ty	***Omit*** No Qwik-Ty Strain Relief Arm **T** Qwik-Ty Arm Included

Size	A in	A mm	B in	B mm	C in	C mm	D in	D mm	E in	E mm	F in	F mm	G in	G mm	H in	H mm	J Thd UNC-2
09	.775	19.7	.34	8.6	.75	19.1	.312	7.9	.281	7.1	.32	8.1	.565	14.4	.154	3.9	2-56
15	.925	23.5	.34	8.6	.88	22.4	.420	10.7	.281	7.1	.44	11.2	.715	18.2	.154	3.9	2-56
21	1.075	27.3	.34	8.6	1.00	25.4	.590	15.0	.281	7.1	.56	14.2	.865	22.0	.154	3.9	2-56
25	1.175	29.8	.34	8.6	1.06	26.9	.690	17.5	.281	7.1	.62	15.7	.965	24.5	.154	3.9	2-56
31	1.325	33.7	.34	8.6	1.12	28.4	.820	20.8	.281	7.1	.68	17.3	1.115	28.3	.154	3.9	2-56
37	1.475	37.5	.34	8.6	1.16	29.5	.970	24.6	.281	7.1	.72	18.3	1.265	32.1	.154	3.9	2-56
51	1.425	36.2	.38	9.7	1.19	30.2	.920	23.4	.312	7.9	.75	19.1	1.215	30.9	.154	3.9	2-56
51-2	1.835	46.6	.34	8.6	1.19	30.2	1.030	26.2	.281	7.1	.75	19.1	1.615	41.0	.154	3.9	2-56
67	2.225	56.5	.34	8.6	1.19	30.2	1.720	43.7	.281	7.1	.75	19.1	2.015	51.2	.154	3.9	2-56
69	1.730	43.9	.40	10.2	1.19	30.2	1.190	30.2	.312	7.9	.75	19.1	1.515	38.5	.154	3.9	2-56
75	2.055	52.2	.40	10.2	1.19	30.2	1.195	30.4	.312	7.9	.75	19.1	1.705	43.3	.184	4.7	4-40
100	2.160	54.9	.43	10.9	1.25	31.8	1.290	32.8	.360	9.1	.81	20.6	1.800	45.7	.184	4.7	4-40
130	2.510	63.8	.43	10.9	1.50	38.1	1.650	41.9	.360	9.1	1.06	26.9	2.150	54.6	.184	4.7	4-40

TABLE 1 SCREWLOCK OPTIONS

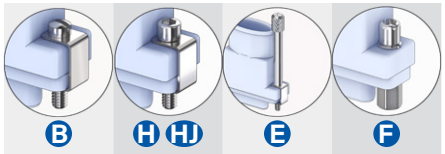

SCREWLOCKS AND JACKSCREWS

CLIP
Clip has circular hole and square hole.

JACKSCREW
Square hole is on the bottom. Screw is captive. Turn screws to mate connectors.

SCREWLOCK
Square hole is on the top. Screw is floating. Mate connectors first, then fasten screwlocks.

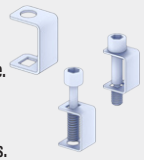

BAND OPTIONS

Terminate cable braid to backshell with optional band strap and banding tool. Pre-coiled bands are passivated stainless steel. Slim Standard bands have reduced thickness for weight reduction. Micro Slim bands have reduced thickness for weight reduction. Micro-Max bands are high-tension for lower-resistivity termination.

Band Type and Width	Hand Tool	Pneumatic
Standard: .24 (6.1)	601-100	601-106
Slim Standard: .24 (6.1)	601-109	601-110
Micro: .12 (3.0)	601-101	601-107
Micro Slim: .12 (3.0)	601-122	601-123
Micro-Max: .12 (3.0)	601-129	601-118

© 2024 Glenair, Inc • 1211 Air Way, Glendale, CA 91201 • 818-247-6000 • www.glenair.com • U.S. CAGE code 06324 • Rectangular Accessories
Dimensions in Inches (millimeters) are subject to change without notice.

507-175

EMI Banding Backshell, Elliptical Micro Band

- Elliptical Entry
- Micro Band Shield Termination
- Top, 45° and 90° Entry

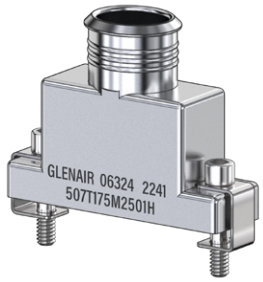

T Top Entry

S 90° Entry

E 45°Entry

507-175

This accessory fits MWDM and M83513 Class M metal shell Micro-D connectors

EMI, variable elliptical entry. 507-175 backshell fits MIL-DTL-83513 Class M and Glenair MWDM Micro-D connectors. Elliptical entry accommodates large wire bundles. Optional Qwik-Ty strain relief arm. Terminate cable shield to backshell with BandMaster ATS .12" wide Micro band strap. Available with male or female screwlocks. Screwlocks allow connectors to be fully mated prior to fastening screws. Aluminum with passivated stainless steel screws and retainer clips.

TABLE 1 SCREWLOCK OPTIONS

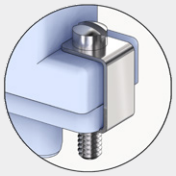

No Designator
Fillister Head Screwlocks

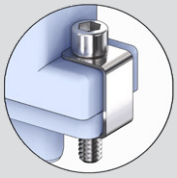

H
Socket Head Screwlocks

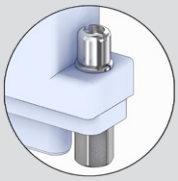

F
Female Hex Post

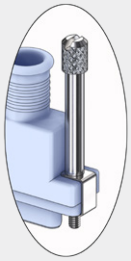

E
Extended Screwlocks

PART NUMBER

Sample PN➜ **507T175 JF 100 07 H S J**

Base P/N	**507T175**	T Top Entry
	507S175	S 90° Entry
	507E175	E 45° Entry
Finish	**TZ**	Tin-Zinc
	JF	Cadmium w/ Yellow Chromate
	M	Electroless Nickel
	MT	Nickel-PTFE
	ZR	Black Zinc-Nickel
	Z2	Gold
Shell Size	**09 15 21 25 31 37 51 51-2 67 69 75 100 130**	

Entry Size

Entry Size	D	E	Shell Sizes
01	.344 (8.7)	.290 (7.4)	09 thru 130
02	.494 (12.5)	.290 (7.4)	15 thru 130
03	.644 (16.4)	.290 (7.4)	21 thru 130
04	.744 (18.9)	.304 (7.7)	25 thru 130
05	.894 (22.7)	.304 (7.7)	31 thru 130
06	.994 (25.2)	.304 (7.7)	37 thru 130
07	1.044 (26.5)	.304 (7.7)	37 thru 130
08	1.024 (26.0)	.384 (9.8)	75 thru 130
09	1.625 (41.3)	.360 (9.1)	130

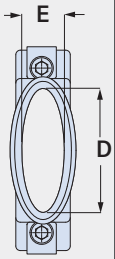

Screwlocks *(Table 1)*	***Omit***	Fillister Head Male Screwlocks
	E	Extended Slotted MaleScrewlocks
	F	Female Hex Post
	H	Socket Head Male Screwlocks
Qwik-Ty®	***Omit***	No Qwik-Ty Arm
	S	Qwik-Ty Arm Included

Band	***Omit***	No Band	**J**	Micro Slim Band Included
	M	Micro Band Included	**L**	Micro-Max Band Included

507-175

EMI Banding Backshell, Elliptical Micro Band

- Elliptical Entry
- Micro Band Shield Termination
- Top, 45° and 90° Entry

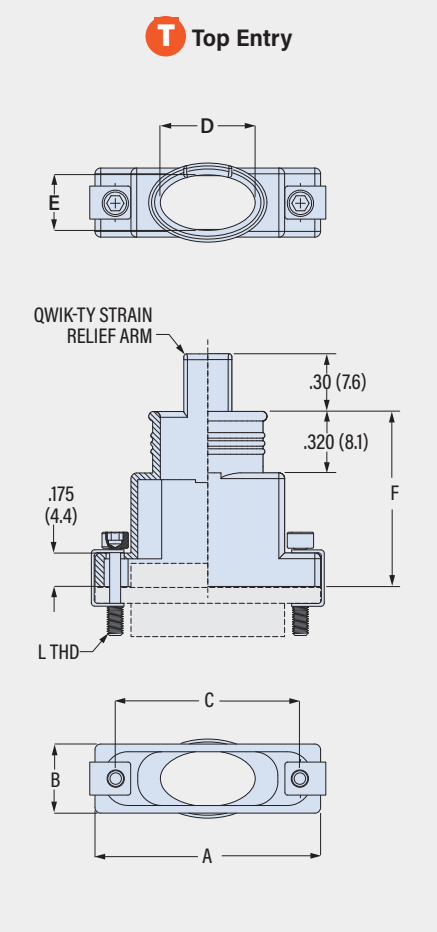

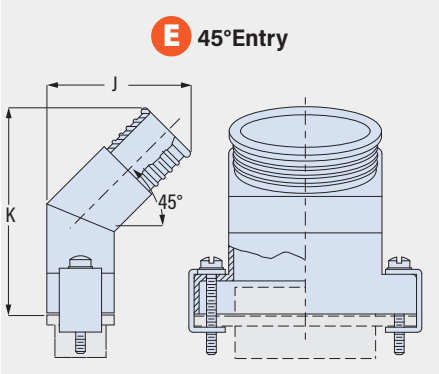

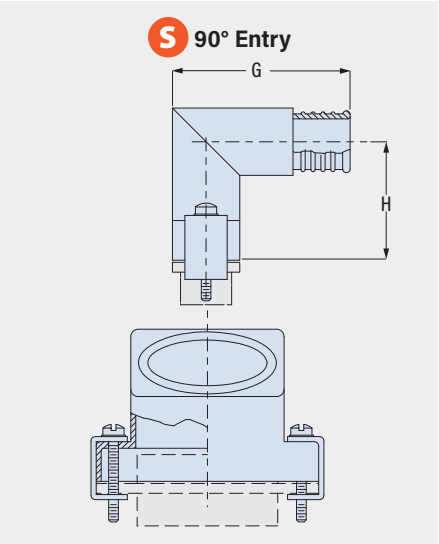

Entry Size	D ± .010 (0.3) in	D ± .010 (0.3) mm	E ± .010 (0.3) in	E ± .010 (0.3) mm	Shell Sizes
01	.344	8.7	.290	7.4	09 thru 130
02	.494	12.5	.290	7.4	15 thru 130
03	.644	16.4	.290	7.4	21 thru 130
04	.744	18.9	.304	7.7	25 thru 130
05	.894	22.7	.304	7.7	31 thru 130
06	.994	25.2	.304	7.7	37 thru 130
07	1.044	26.5	.304	7.7	37 thru 130
08	1.024	26.0	.384	9.8	75 thru 130
09	1.625	41.3	.360	9.1	130

BAND OPTIONS

Terminate cable braid to backshell with optional band strap and banding tool. Pre-coiled bands are passivated stainless steel. Micro Slim bands have reduced thickness for weight reduction. Micro-Max bands are high-tension for lower-resistivity termination.

Band Type and Width	Hand Tool	Pneumatic Tool
Micro: .12 (3.0)	601-101	601-107
Micro Slim: .12 (3.0)	601-122	601-123
Micro-Max: .12 (3.0)	601-129	601-118

Size	A Max. in	A Max. mm	B Max in	B Max mm	C in	C mm	F Max in	F Max mm	G Max in	G Max mm	H Max in	H Max mm	J Max in	J Max mm	K Max in	K Max mm	L Thd UNC-2
09	.850	21.6	.370	9.4	.565	14.4	.782	19.9	.970	24.6	.668	17.0	.673	17.1	.851	21.6	2-56
15	1.000	25.4	.370	9.4	.715	18.2	.832	21.1	.970	24.6	.668	17.0	.673	17.1	.876	22.3	2-56
21	1.150	29.2	.370	9.4	.865	22.0	.882	22.4	.970	24.6	.668	17.0	.673	17.1	.901	22.9	2-56
25	1.250	31.8	.370	9.4	.965	24.5	.932	23.7	.990	25.1	.678	17.2	.700	17.8	.943	24.0	2-56
31	1.400	35.6	.370	9.4	1.115	28.3	.972	24.7	.990	25.1	.678	17.2	.700	17.8	.963	24.5	2-56
37	1.550	39.4	.370	9.4	1.265	32.1	.972	24.7	.990	25.1	.678	17.2	.700	17.8	.983	25.0	2-56
51	1.500	38.1	.410	10.4	1.215	30.9	1.092	27.7	1.030	26.2	.698	17.7	.758	19.3	1.050	26.7	2-56
51-2	1.910	48.5	.370	9.4	1.615	41.0	1.092	27.7	1.030	26.2	.698	17.7	.758	19.3	1.050	26.7	2-56
67	2.310	58.7	.370	9.4	2.015	51.2	1.092	27.7	1.030	26.2	.698	17.7	.758	19.3	1.050	26.7	2-56
69	1.810	46.0	.410	10.4	1.515	38.5	1.092	27.7	1.030	26.2	.698	17.7	.758	19.3	1.050	26.7	2-56
75	2.140	54.4	.470	10.4	1.705	43.3	1.092	27.7	1.030	26.2	.698	17.7	.758	19.3	1.050	26.7	4-40
100	2.235	56.8	.460	11.7	1.800	45.7	1.157	29.4	1.090	27.7	.723	18.4	.824	20.9	1.130	28.7	4-40
130	2.585	65.9	.460	11.7	2.160	54.6	1.157	29.4	1.090	27.7	.723	18.4	.824	20.9	1.130	28.7	4-40

© 2024 Glenair, Inc • 1211 Air Way, Glendale, CA 91201 • 818-247-6000 • www.glenair.com • U.S. CAGE code 06324 • Rectangular Accessories
Dimensions in Inches (millimeters) are subject to change without notice.

507-296

EMI Banding Backshell, Lightweight Micro Band

- Elliptical Top and 90° Entry
- Micro Band Shield Termination
- Lightweight

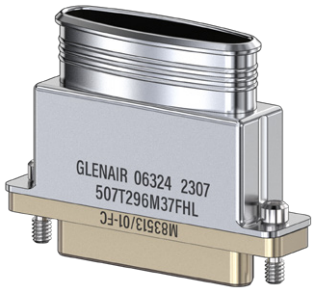

T Top Entry

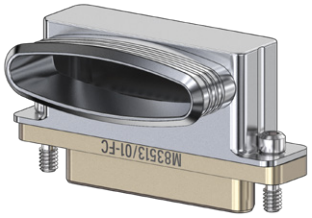

S 90° Entry

507-296

This accessory fits MWDM and M83513 Class M metal shell Micro-D connectors

Lightweight, elliptical entry. 507-296 EMI banding backshell fits metal shell Micro-D connectors. Lightweight design features reduced flange height and reduced hardware weight. Jackscrews have e-rings to attach backshell to connector. Available with jackscrews or female jackposts. Aluminum or stainless steel. Stainless steel screws and e-rings.

TABLE 1
HARDWARE OPTIONS

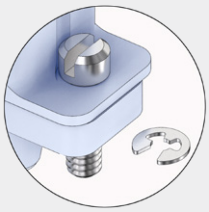

B Fillister Head Male Jackscrew

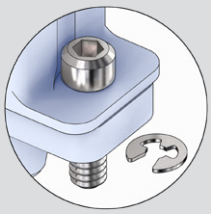

H Socket Head Male Jackscrew

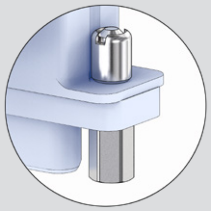

F Female Jackpost

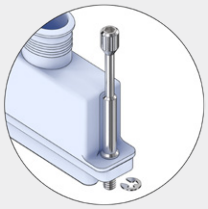

E Extended Socket Head Male Jackscrew

PART NUMBER

Sample PN➜ **507T296 M 21 B E K**

Base P/N	**507T296**	T Top Entry
	507S296	S 90° Entry
Material / Finish	**TZ**	Tin-Zinc
	JF	Alum / Cadmium w/ Yel. Chromate
	M	Alum / Electroless Nickel
	MT	Alum / Nickel-PTFE
	ZR	Alum / Black Zinc-Nickel
	Z1	SST / Passivated
	Z2	Alum / Gold
Shell Size	**09 15 21 25 31 37 51 51-2 67 69 75 100 130**	

Entry Size

Entry Size	G	Shell Size
A	.320 (8.1)	09 thru 130
B	.470 (11.9)	15 thru 130
C	.620 (15.7)	21 thru 130
D	.720 (18.3)	25 thru 130
E	.870 (22.1)	31 thru 130
F	.970 (24.6)	37 thru 130
G	1.020 (25.9)	37, 51-2 thru 130
H	1.270 (32.3)	51-2 thru 130
J	1.360 (34.5)	51-2, 67, 100, 130
K	1.770 (45.0)	67, 130

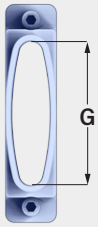

ENTRY SIZE

Hardware *(Table 1)*	**B**	Fillister Head Male Jackscrew
	H	Socket Head Male Jackscrew
	E	Extended Male Jackscrew*
	F	Female Jackpost

** Extended jackscrew is not to be used with top entry backshell at max entry size.*

Band	***Omit***	No Band
	L	Micro Band Included
	J	Micro Slim Band Included
	K	Micro-Max Band Included

© 2024 Glenair, Inc • 1211 Air Way, Glendale, CA 91201 • 818-247-6000 • www.glenair.com • U.S. CAGE code 06324 • Rectangular Accessories
Dimensions in Inches (millimeters) are subject to change without notice.

507-296

EMI Banding Backshell, Lightweight Micro Band

- Elliptical Top and 90° Entry
- Micro Band Shield Termination
- Lightweight

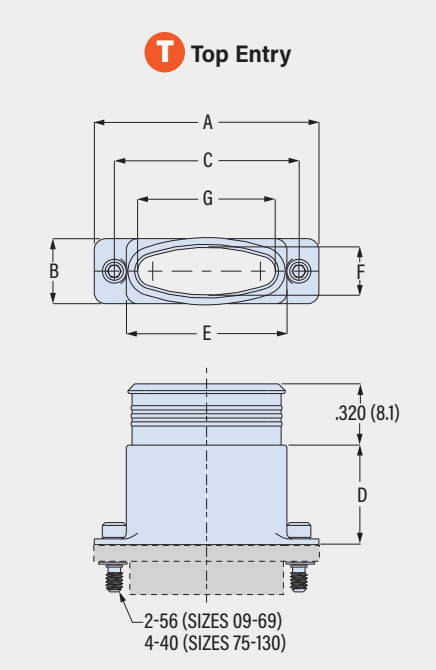

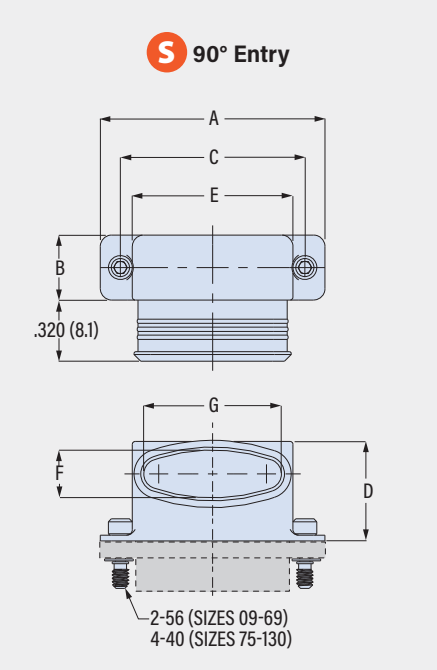

Size	A in	A mm	B in	B mm	C in	C mm	D in	D mm	E in	E mm	F in	F mm	Max Entry
09	.775	19.7	.340	8.6	.565	14.4	.520	13.2	.440	11.2	.250	6.4	A
15	.925	23.5	.340	8.6	.715	18.2	.520	13.2	.590	15.0	.250	6.4	B
21	1.075	27.3	.340	8.6	.865	22.0	.520	13.2	.740	18.8	.250	6.4	C
25	1.175	29.8	.340	8.6	.965	24.5	.520	13.2	.840	21.3	.250	6.4	D
31	1.325	33.7	.340	8.6	1.115	28.3	.520	13.2	.990	25.1	.250	6.4	E
37	1.475	37.5	.340	8.6	1.265	32.1	.520	13.2	1.140	29.0	.250	6.4	G
51	1.425	36.2	.380	9.7	1.215	30.9	.610	15.5	1.090	27.7	.290	7.4	F
51-2	1.825	46.4	.340	8.6	1.615	41.0	.520	13.2	1.490	37.8	.250	6.4	J
67	2.225	56.5	.340	8.6	2.015	51.2	.520	13.2	1.890	48.0	.250	6.4	K
69	1.725	43.8	.380	9.7	1.515	38.5	.610	15.5	1.390	35.3	.290	7.4	H
75	2.070	52.6	.380	9.7	1.705	43.3	.520	13.2	1.490	37.8	.290	7.4	H
100	2.160	54.9	.430	10.9	1.800	45.7	.630	16.0	1.522	38.7	.340	8.6	J
130	2.510	63.8	.430	10.9	2.150	54.6	.630	16.0	1.882	47.8	.340	8.6	K

Entry Size	G in	G mm	Available Shell Sizes
A	.320	8.1	09 thru 130
B	.470	11.9	15 thru 130
C	.620	15.7	21 thru 130
D	.720	18.3	25 thru 130
E	.870	22.1	31 thru 130
F	.970	24.6	37 thru 130
G	1.020	25.9	37, 51-2 thru 130
H	1.270	32.3	51-2 thru 130
J	1.360	34.5	51-2, 67, 100, 130
K	1.770	45.0	67, 130

BAND OPTIONS

Terminate cable braid to backshell with optional band strap and banding tool. Pre-coiled bands are passivated stainless steel. Micro Slim bands have reduced thickness for weight reduction. Micro-Max bands are high-tension for lower-resistivity termination.

Band Type and Width	Hand Tool	Pneumatic Tool
Micro: .12 (3.0)	601-101	601-107
Micro Slim: .12 (3.0)	601-122	601-123
Micro-Max: .12 (3.0)	601-129	601-118

© 2024 Glenair, Inc • 1211 Air Way, Glendale, CA 91201 • 818-247-6000 • www.glenair.com • U.S. CAGE code 06324 • Rectangular Accessories
Dimensions in Inches (millimeters) are subject to change without notice.

507-297

EMI Banding Backshell, Lightweight 45°

- Elliptical 45° Entry
- Micro Band Shield Termination
- Lightweight

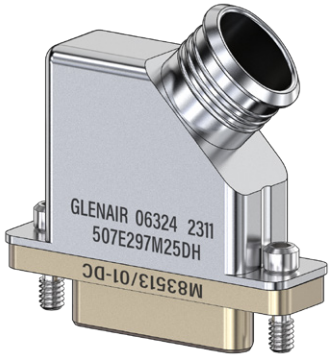

507-297

This accessory fits MWDM and M83513 Class M metal shell Micro-D connectors

Lightweight, elliptical entry. 507-297 EMI banding backshell fits metal shell Micro-D connectors. Lightweight design features reduced flange height and reduced hardware weight. Jackscrews have e-rings to attach backshell to connector. Available with jackscrews or female jackposts. Aluminum or stainless steel. Stainless steel screws and e-rings.

PART NUMBER

	507E297	JF	37	E	H	K

Base P/N — 507E297

Material / Finish

TZ	Tin-Zinc
JF	Alum / Cadmium w/ Yel. Chromate
M	Alum / Electroless Nickel
MT	Alum / Nickel-PTFE
ZR	Alum / Black Zinc-Nickel
Z1	SST / Passivated
Z2	Alum / Gold

Shell Size

09 15 21 25 31 37 51 51-2
67 69 75 100 130

Entry Size

Entry Size	H	Shell Size
A	.188 (4.8)	09 thru 130
B	.230 (5.8)	15 thru 130
C	.265 (6.7)	21 thru 130
D	.335 (8.5)	25 thru 130
E	.360 (9.1)	31 thru 130
F	.410 (10.4)	37 thru 130
G	.520 (13.2)	51 thru 130
H	.585 (14.9)	51-2 thru 130
J	.665 (16.9)	51-2 thru 130
K	.720 (18.3)	67, 100, 130
L	.760 (19.3)	67, 130

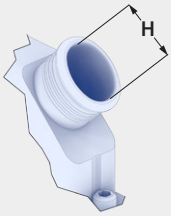

ENTRY SIZE

Jackscrews *(Table 1)*

B	Fillister Head Male Jackscrew
F	Female Jackpost
H	Socket Head Male Jackscrew

Band

Omit	No Band
L	Micro Band Included
J	Micro Slim Band Included
K	Micro-Max Band Included

BAND OPTIONS

Terminate cable braid to backshell with optional band strap and banding tool. Pre-coiled bands are passivated stainless steel. Micro Slim bands have reduced thickness for weight reduction. Micro-Max bands are high-tension for lower-resistivity termination.

Band Type and Width	Hand Tool	Pneumatic Tool
Micro: .12 (3.0)	601-101	601-107
Micro Slim: .12 (3.0)	601-122	601-123
Micro-Max: .12 (3.0)	601-129	601-118

TABLE 1 JACKSCREW OPTIONS

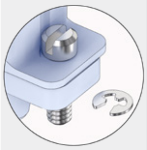
B Fillister Hd. Jackscrew

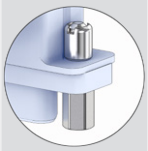
F Female Jackpost

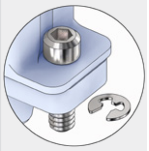
H Socket Head Jackscrew

507-297

EMI Banding Backshell, Lightweight 45°

- Elliptical 45° Entry
- Micro Band Shield Termination
- Lightweight

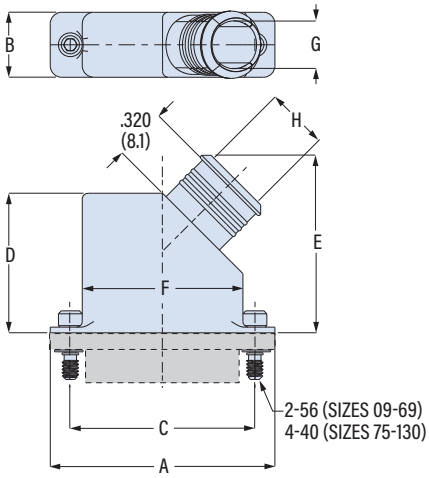

Entry Size	H in	H mm	Available Shell Sizes
A	ø .188	4.8	09 thru 130
B	ø .230	5.8	15 thru 130
C	.265	6.7	21 thru 130
D	.335	8.5	25 thru 130
E	.360	9.1	31 thru 130
F	.410	10.4	37 thru 130
G	.520	13.2	51 thru 130
H	.585	14.9	51-2 thru 130
J	.665	16.9	51-2 thru 130
K	.720	18.3	67, 100, 130
L	.760	19.3	67, 130

Shell Size	A in	A mm	B in	B mm	C in	C mm	D in	D mm	E in	E mm	F in	F mm	G in	G mm	Max Entry
09	.775	19.7	.340	8.6	.565	14.4	.500	12.7	.70	17.8	.440	11.2	-	-	A
15	.925	23.5	.340	8.6	.715	18.2	.560	14.2	.76	19.3	.590	15.0	-	-	B
21	1.075	27.3	.340	8.6	.865	22.0	.660	16.8	.86	21.8	.740	18.8	.250	6.4	C
25	1.175	29.8	.340	8.6	.965	24.5	.730	18.5	.93	23.6	.840	21.3	.250	6.4	D
31	1.325	33.7	.340	8.6	1.115	28.3	.810	20.6	1.01	25.7	.990	25.1	.250	6.4	E
37	1.475	37.5	.340	8.6	1.265	32.1	.890	22.6	1.09	27.7	1.140	29.0	.250	6.4	F
51	1.425	36.2	.380	9.7	1.215	30.9	.900	22.9	1.10	27.9	1.090	27.7	.290	7.4	G
51-2	1.825	46.4	.340	8.6	1.615	41.0	1.030	26.2	1.23	31.2	1.490	37.8	.250	6.4	J
67	2.225	56.5	.340	8.6	2.015	51.2	1.030	26.2	1.23	31.2	1.890	48.0	.250	6.4	L
69	1.725	43.8	.380	9.7	1.515	38.5	1.050	26.7	1.25	31.8	1.390	35.3	.290	7.4	J
75	2.070	52.6	.380	9.7	1.705	43.3	1.050	26.7	1.25	31.8	1.490	37.8	.290	7.4	J
100	2.160	54.9	.430	10.9	1.800	45.7	1.100	27.9	1.30	33.0	1.522	38.7	.340	8.6	K
130	2.510	63.8	.430	10.9	2.150	54.6	1.100	27.9	1.30	33.0	1.882	47.8	.340	8.6	L

© 2024 Glenair, Inc • 1211 Air Way, Glendale, CA 91201 • 818-247-6000 • www.glenair.com • U.S. CAGE code 06324 • Rectangular Accessories
Dimensions in Inches (millimeters) are subject to change without notice.

507-145

EMI Banding Backshell, Split, Round Entry

- Split
- Round Entry
- Micro Band Shield Termination

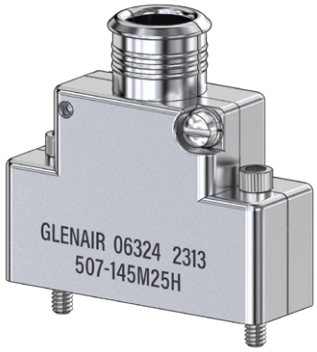

507-145

This accessory fits MWDM and M83513 Class M metal shell Micro-D connectors

EMI, split, banding. 507-145 two piece backshell fits MIL-DTL-83513 Class M and Glenair MWDM Micro-D connectors with metal shell. Micro-D connector is captivated between backshell halves. Terminate cable shield to backshell with Micro band strap. Slide individual wire shields through optional slots on banding platform, or use slots for wire strain relief tie. Four screwlock styles are available: fillister head (standard), socket head, extended length (knurled, slotted), or fixed female hex jackposts. Aluminum with passivated stainless steel screws and washers.

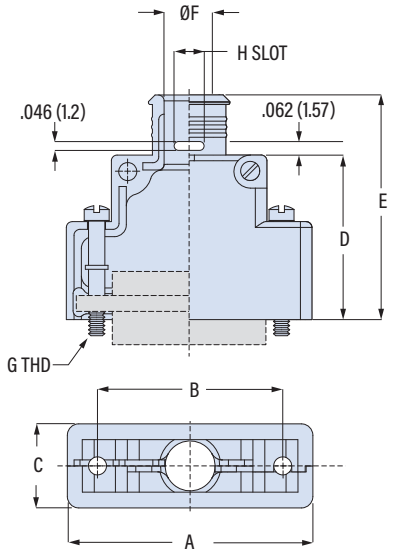

BAND OPTIONS

Band Type and Width	Hand Tool	Pneumatic Tool
Micro: .12 (3.0)	601-101	601-107
Micro Slim: .12 (3.0)	601-122	601-123
Micro-Max: .12 (3.0)	601-129	601-118

PART NUMBER

Sample PN➜ **507-145 M 21 H K S**

Base P/N	507-145	
Finish	TZ	Tin-Zinc
	JF	Cadmium w/ Yellow Chromate
	M	Electroless Nickel
	MT	Nickel-PTFE
	ZR	Black Zinc-Nickel
	Z2	Gold
Shell Size	09 15 21 25 31 37 51 51-2 67 69 100	
Screwlocks (Table 1)	*Omit*	Fillister Head Male Screwlocks
	E	Extended Knurled Slotted Screwlocks
	F	Female Jackposts (fixed)
	H	Socket Head Male Screwlocks
Band	*Omit*	No Band
	K	Micro Band Included
	J	Micro Slim Band Included
	L	Micro-Max Band Included
Slots	*Omit*	No Slots
	S	Slots included

Size	A Max in	A Max mm	B ± .005 (0.1) in	B ± .005 (0.1) mm	C Max in	C Max mm	D Max in	D Max mm	E Max in	E Max mm	ø F ± .010 (0.3) in	ø F ± .010 (0.3) mm	G Thd UNC-2	H Slot in	H Slot mm	J Max in	J Max mm
09	.915	23.2	.565	14.4	.450	11.4	.721	18.3	1.033	26.2	.160	4.1	2-56	.109	2.8	.554	14.1
15	1.065	27.1	.715	18.2	.450	11.4	.783	19.9	1.096	27.8	.190	4.8	2-56	.125	3.2	.617	15.7
21	1.215	30.9	.865	22.0	.450	11.4	.815	20.7	1.127	28.6	.220	5.6	2-56	.125	3.2	.649	16.5
25	1.315	33.4	.965	24.5	.450	11.4	.877	22.3	1.190	30.2	.260	6.6	2-56	.156	4.0	.711	18.1
31	1.465	37.2	1.115	28.3	.450	11.4	.908	23.1	1.221	31.0	.275	7.0	2-56	.156	4.0	.722	18.3
37	1.615	41.0	1.265	32.1	.450	11.4	.971	24.7	1.283	32.6	.285	7.2	2-56	.156	4.0	.785	19.9
51	1.565	39.8	1.215	30.9	.495	12.6	1.033	26.2	1.346	34.2	.350	8.9	2-56	.188	4.8	.867	22.0
51-2	1.965	49.9	1.615	41.0	.450	11.4	1.033	26.2	1.346	34.2	.285	7.2	2-56	.188	4.8	.867	22.0
67	2.365	60.1	2.015	51.2	.450	11.4	1.033	26.2	1.346	34.2	.350	8.9	2-56	.188	4.8	.867	22.0
69	1.865	47.4	1.515	38.5	.495	12.6	1.033	26.2	1.346	34.2	.350	8.9	2-56	.188	4.8	.867	22.0
100	2.305	58.5	1.800	45.7	.540	13.7	1.096	27.8	1.408	35.8	.490	12.4	4-40	.219	5.6	.930	23.6

TABLE 1 SCREWLOCK OPTIONS

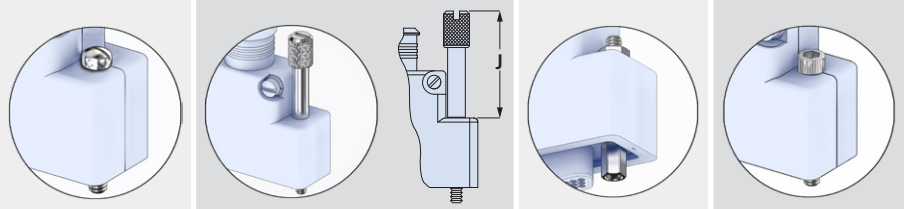

No Designator
Fillister Head Screwlocks

E
Extended Screwlocks

F
Female Jackpost

H
Socket Head Screwlocks

507-178

EMI Banding Backshell, Split, Elliptical Entry

- Split Elliptical
- Micro Band Shield Termination
- Top Entry

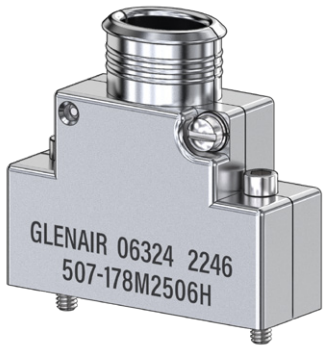

507-178

This accessory fits MWDM and M83513 Class M metal shell Micro-D connectors

EMI, split, banding, elliptical. 507-178 two piece backshell fits MIL-DTL-83513 Class M and Glenair MWDM Micro-D connectors with metal shell. Terminate cable shield to backshell with Micro band strap. Available with screwlocks or jackscrews: screwlocks allow connectors to be fully mated prior to fastening screws, jackscrews must be tightened in order to mate connectors. Aluminum with passivated stainless steel screws and washers.

TABLE 1
SCREWLOCK AND JACKSCREW OPTIONS

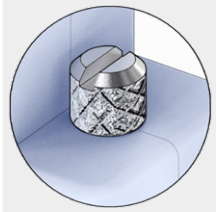

No Designator, **J**
Slotted

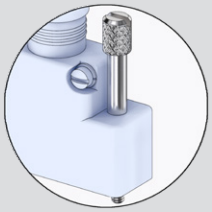

E **EJ**
Extended

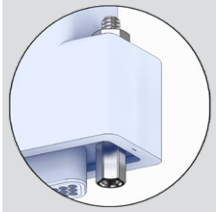

FF
Female Hex Post

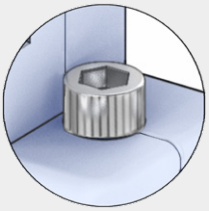

H **HJ**
Socket Head

PART NUMBER

	Sample PN➜	507-178	M	21	05	K	HJ	T

Base P/N — **507-178**

Material / Finish

TZ	Tin-Zinc
JF	Alum / Cadmium w/ Yel. Chromate
M	Alum / Electroless Nickel
MT	Alum / Nickel-PTFE
ZR	Alum / Black Zinc-Nickel
Z1	SST / Passivated
Z2	Alum / Gold

Shell Size — **09 15 21 25 31 37 51 51-2 67 69 75 100 130**

Entry Size

Entry Size	H	Shell Size
04	.250 (6.4)	09, 15, 21
05	.312 (7.9)	15, 21, 25, 31
06	.375 (9.5)	21, 25, 31, 37, 51
07	.437 (11.1)	25, 31, 37, 51
08	.500 (12.7)	25, 31, 37, 51
09	.562 (14.3)	31 to 130
10	.625 (15.9)	31 to 130
11	.688 (17.5)	37 to 130
12	.750 (19.1)	37 to 130
13	.812 (20.6)	37, 51-2 to 130
14	.875 (22.2)	51-2 to 130
15	.938 (23.8)	51-2 to 130
16	1.000 (25.4)	51-2 to 130

ENTRY SIZE

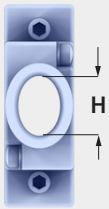

Band

Omit	No Band
K	Micro Band Included
J	Micro Slim Band Included
L	Micro-Max Band Included

Screwlocks and Jackscrews *(Table 1)*

	Male Screwlocks	*Screwlocks float and allow the connectors to be mated before the screws are fastened.*
Omit	Slotted Male	
H	Socket Head Male	
E	Extended Slotted	
	Jackscrews	*Jackscrews must be fastened to mate connectors.*
J	Slotted Male	
HJ	Socket Head Male	
EJ	Extended Slotted	
	Female Post	
FF	Female Jackposts	*Fixed Hex*

Qwik-Ty

Omit	No Qwik-Ty
T	Qwik-Ty Strain Relief Arm

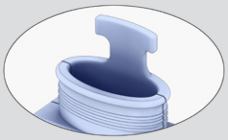

© 2024 Glenair, Inc • 1211 Air Way, Glendale, CA 91201 • 818-247-6000 • www.glenair.com • U.S. CAGE code 06324 • Rectangular Accessories
Dimensions in Inches (millimeters) are subject to change without notice.

507-178

EMI Banding Backshell, Split, Elliptical Entry

- Split Elliptical
- Micro Band Shield Termination
- Top Entry

SIZE 09

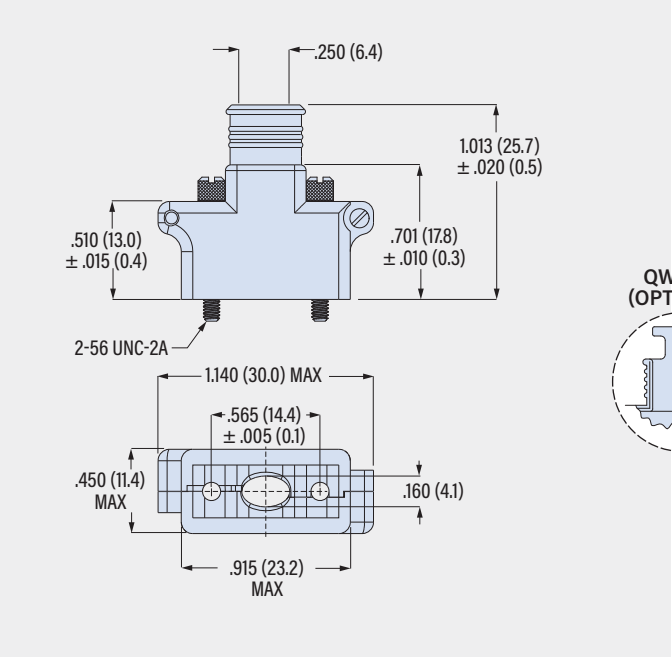

SIZES 15 THRU 130

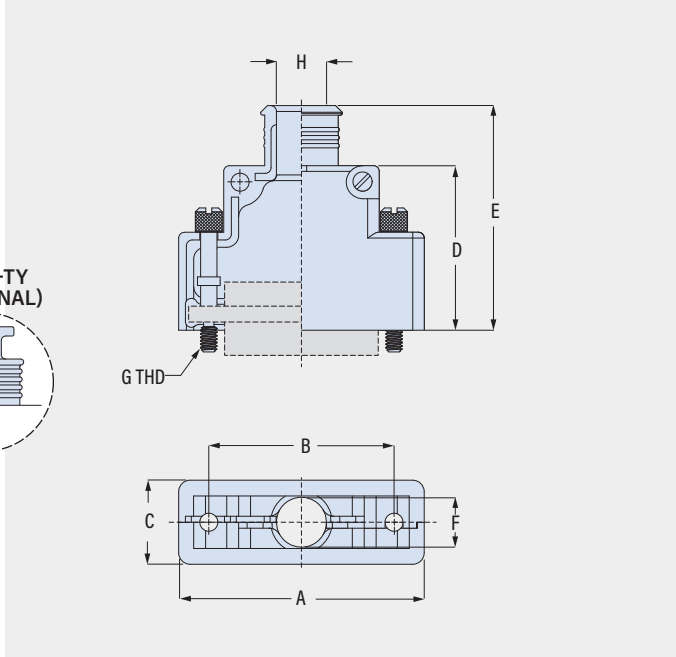

Size	A Max in	A Max mm	B ± .005 (0.1) in	B ± .005 (0.1) mm	C Max in	C Max mm	D ± .010 (0.3) in	D ± .010 (0.3) mm	E ± .020 (0.5) in	E ± .020 (0.5) mm	F in	F mm	G Thd UNC-2
15	1.065	27.1	.715	18.2	.450	11.4	.763	19.4	1.076	27.3	.190	4.8	2-56
21	1.215	30.9	.865	22.0	.450	11.4	.795	20.2	1.107	28.1	.220	5.6	2-56
25	1.315	33.4	.965	24.5	.450	11.4	.857	21.8	1.170	29.7	.260	6.6	2-56
31	1.465	37.2	1.115	28.3	.450	11.4	.888	22.6	1.201	30.5	.275	7.0	2-56
37	1.615	41.0	1.265	32.1	.450	11.4	.951	24.2	1.263	32.1	.285	7.2	2-56
51	1.565	39.8	1.215	30.9	.495	12.6	1.013	25.7	1.326	33.7	.350	8.9	2-56
51-2	1.965	49.9	1.615	41.0	.450	11.4	1.013	25.7	1.326	33.7	.350	8.9	2-56
67	2.365	60.1	2.015	51.2	.450	11.4	1.013	25.7	1.326	33.7	.350	8.9	2-56
69	1.865	47.4	1.515	38.5	.495	12.6	1.013	25.7	1.326	33.7	.350	8.9	2-56
75	2.210	56.13	1.705	43.3	.495	12.6	1.013	25.7	1.326	33.7	.350	8.9	4-40
100	2.305	58.5	1.800	45.7	.540	13.7	1.076	27.3	1.388	35.3	.490	12.4	4-40
130	2.665	67.7	2.160	54.6	.540	13.7	1.076	27.3	1.388	35.3	.490	12.4	4-40

Entry Size	H in	H mm	Shell Size
04	.250	6.4	09, 15, 21
05	.312	7.9	15, 21, 25, 31
06	.375	9.5	21, 25, 31, 37, 51
07	.437	11.1	25, 31, 37, 51
08	.500	12.7	25, 31, 37, 51
09	.562	14.3	31 to 130
10	.625	15.9	31 to 130
11	.688	17.5	37 to 130
12	.750	19.1	37 to 130
13	.812	20.6	37, 51-2 to 130
14	.875	22.2	51-2 to 130
15	.938	23.8	51-2 to 130
16	1.000	25.4	51-2 to 130

BAND OPTIONS

Terminate cable braid to backshell with optional band strap and banding tool. Pre-coiled bands are passivated stainless steel. Micro Slim bands have reduced thickness for weight reduction. Micro-Max bands are high-tension for lower-resistivity termination.

Band Type and Width	Hand Tool	Pneumatic Tool
Micro: .12 (3.0)	601-101	601-107
Micro Slim: .12 (3.0)	601-122	601-123
Micro-Max: .12 (3.0)	601-129	601-118

© 2024 Glenair, Inc • 1211 Air Way, Glendale, CA 91201 • 818-247-6000 • www.glenair.com • U.S. CAGE code 06324 • Rectangular Accessories
Dimensions in Inches (millimeters) are subject to change without notice.

500-012

Qwik-Ty® Strain Relief Backshell

- Qwik-Ty Strain Relief
- For Unshielded Wire Bundles
- Top, Side and 45° Entry

T Top Entry

S Side Entry

E 45°Entry

500-012

This accessory fits MWDM and M83513 Class M metal shell Micro-D connectors

Qwik-Ty. 500-012 backshell fits MIL-DTL-83513 Class M and Glenair MWDM Micro-D connectors. For unshielded wire bundles. Attach cable tie (not supplied) to Qwik-Ty strain relief arm. Aluminum or stainless steel with passivated stainless steel screws and retainer clips.

TABLE 1
JACKSCREW OPTIONS

B Fillister Head

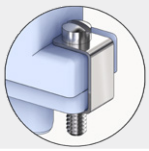

H Socket Head

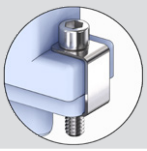

E Extended Slotted

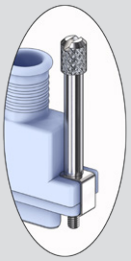

F Female Post

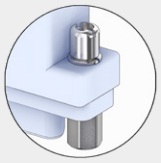

PART NUMBER

Sample PN➜ **500T012 M 51 H**

Base P/N	500T012	T Top Entry
	500S012	S Side Entry
	500E012	E 45° Entry
Material / Finish	TZ	Tin-Zinc
	JF	Alum / Cadmium w/ Yellow Chromate
	M	Alum / Electroless Nickel
	MT	Alum / Nickel-PTFE
	ZR	Alum / Black Zinc-Nickel
	Z1	SST / Passivated
	Z2	Alum / Gold
Shell Size	09 15 21 25 31 37 51 51-2 69 100	
Jackscrews (Table 1)	B	Fillister Head Male
	E	Extended Male
	F	Female Jackpost
	H	Socket Head Male

© 2024 Glenair, Inc • 1211 Air Way, Glendale, CA 91201 • 818-247-6000 • www.glenair.com • U.S. CAGE code 06324 • Rectangular Accessories
Dimensions in Inches (millimeters) are subject to change without notice.

500-012

Qwik-Ty® Strain Relief Backshell

- Qwik-Ty Strain Relief
- For Unshielded Wire Bundles
- Top, Side and 45° Entry

T Top Entry

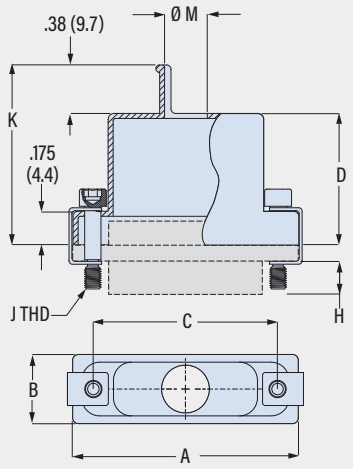

E 45°Entry

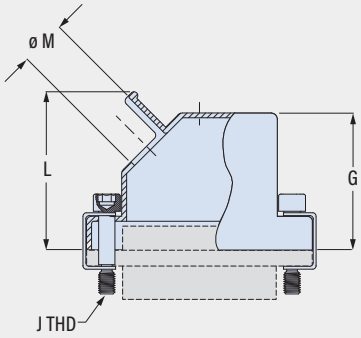

S Side Entry

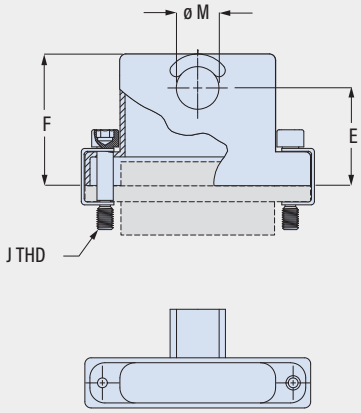

E EXTENDED JACKSCREW

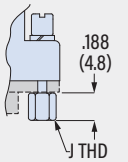

F FEMALE JACKPOST

Size	A in	A mm	B in	B mm	C in	C mm	D in	D mm	E in	E mm	F in	F mm	G in	G mm	H Ref in	H Ref mm	J Thd UNC-2	K ± .03 (0.8) in	K ± .03 (0.8) mm	L Max in	L Max mm	M ± .005 (0.1) in	M ± .005 (0.1) mm	N Max in	N Max mm
09	.775	19.7	.36	9.1	.565	14.4	.32	8.1	.435	11.0	.607	15.4	.650	16.5	.154	3.9	2-56	.70	17.8	.90	22.9	.156	4.0	1.04	26.4
15	.925	23.5	.36	9.1	.715	18.2	.44	11.2	.440	11.2	.643	16.3	.700	17.8	.154	3.9	2-56	.82	20.8	.96	24.4	.188	4.8	1.17	29.7
21	1.075	27.3	.36	9.1	.865	22.0	.56	14.2	.458	11.6	.677	17.2	.735	18.7	.154	3.9	2-56	.94	23.9	.99	25.1	.219	5.6	1.29	32.8
25	1.175	29.8	.36	9.1	.965	24.5	.62	15.7	.483	12.3	.718	18.2	.800	20.3	.154	3.9	2-56	1.00	25.4	1.05	26.7	.250	6.4	1.35	34.3
31	1.325	33.7	.36	9.1	1.115	28.3	.68	17.3	.476	12.1	.726	18.4	.860	21.8	.154	3.9	2-56	1.06	26.9	1.08	27.4	.265	6.7	1.42	36.1
37	1.475	37.5	.36	9.1	1.265	32.1	.72	18.3	.478	12.1	.744	18.9	.925	23.5	.154	3.9	2-56	1.10	27.9	1.12	28.4	.281	7.1	1.45	36.8
51	1.425	36.2	.40	10.2	1.215	30.9	.75	19.1	.548	13.9	.829	21.1	.975	24.8	.154	3.9	2-56	1.13	28.7	1.21	30.7	.312	7.9	1.48	37.6
51-2	1.835	46.6	.36	9.1	1.615	41.0	.75	19.1	.548	13.9	.829	21.1	.975	24.8	.154	3.9	2-56	1.13	28.7	1.21	30.7	.312	7.9	1.48	37.6
69	1.730	43.9	.40	10.2	1.515	38.5	.81	20.6	.548	13.9	.829	21.1	.975	24.8	.154	3.9	2-56	1.19	30.2	1.21	30.7	.344	8.7	1.48	37.6
100	2.160	54.9	.45	11.4	1.800	45.7	.81	20.6	.687	17.4	.984	25.0	1.050	26.7	.184	4.7	4-40	1.19	30.2	1.28	32.5	.375	9.5	1.58	40.1

© 2024 Glenair, Inc • 1211 Air Way, Glendale, CA 91201 • 818-247-6000 • www.glenair.com • U.S. CAGE code 06324 • Rectangular Accessories
Dimensions in Inches (millimeters) are subject to change without notice.

507-146
Straight Clamp Backshell

- Solid Backshell
- Saddle Bar Strain Relief
- For Unshielded Cable

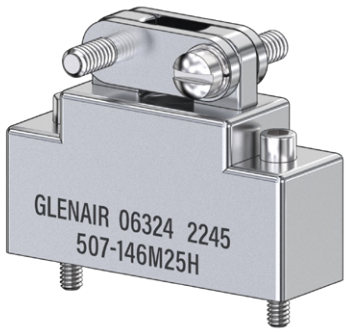

507-146

This accessory fits MWDM and M83513 Class M metal shell Micro-D connectors

Straight clamp. 507-146 strain relief backshell fits metal shell Micro-D connectors. Use with unshielded wire bundles. Flat saddle bars with provide strain relief. Aluminum with stainless steel screws, washers, e-rings and clips.

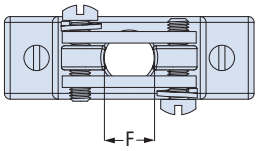

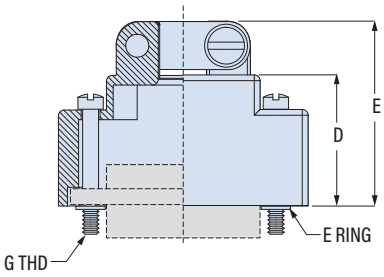

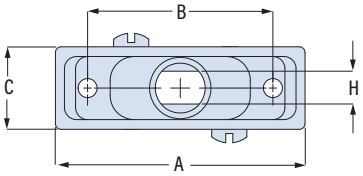

PART NUMBER

	507-146	M	15	H

Base P/N	**507-146**	
Finish	**TZ** Tin-Zinc **JF** Cadmium w/ Yellow Chromate **M** Electroless Nickel **MT** Nickel-PTFE **ZR** Black Zinc-Nickel **Z2** Gold	
Shell Size	**09 15 21 25 31 37 51 51-2 67 69 75 100**	
Hardware *(Table 1)*	**Jackscrews**	
	0mit Fillister Head Male **H** Socket Head Male **E** Extended Slotted	Jackscrews must be fastened to mate connectors. Jackscrews and connector are retained with e-rings. *Size 75 and 100 backshells have C clips instead of e-rings.*
	Screwlocks	
	C Fillister Head Male **HC** Socket Head Male **EC** Extended Slotted	Screwlocks float and allow the connectors to be mated before the screws are fastened. Screwlocks and connector are retained with C clips.
	Female Post	
	F Female Jackpost	Fixed, non-rotating

TABLE 1 HARDWARE OPTIONS

No Designator
Fillister Head Jackscrews

H
Socket Head Jackscrews

E
Extended Jackscrews

F
Female Jackposts

C
Fillister Head Screwlocks

HC
Socket Head Screwlocks

EC
Extended Screwlocks

Size	A Max. in	A Max. mm	B ± .005 (0.1) in	B ± .005 (0.1) mm	C Max in	C Max mm	D ± .010 (0.3) in	D ± .010 (0.3) mm	E ± .030 (0.8) in	E ± .030 (0.8) mm	F ± .005 (0.1) in	F ± .005 (0.1) mm	J THD UNC-2	H ± .005 (0.1) in	H ± .005 (0.1) mm
09	.915	23.2	.565	14.4	.450	11.4	.530	13.5	.750	19.1	.160	4.1	2-56	.160	4.1
15	1.065	27.1	.715	18.2	.450	11.4	.580	14.7	.800	20.3	.190	4.8	2-56	.190	4.8
21	1.215	30.9	.865	22.0	.450	11.4	.630	16.0	.910	23.1	.220	5.6	2-56	.220	5.6
25	1.315	33.4	.965	24.5	.450	11.4	.680	17.3	.960	24.4	.260	6.6	2-56	.260	6.6
31	1.465	37.2	1.115	28.3	.450	11.4	.720	18.3	1.000	25.4	.275	7.0	2-56	.275	7.0
37	1.615	41.0	1.265	32.1	.450	11.4	.760	19.3	1.040	26.4	.285	7.2	2-56	.285	7.2
51	1.565	39.8	1.215	30.9	.495	12.6	.840	21.3	1.120	28.4	.350	8.9	2-56	.350	8.9
51-2	1.965	49.9	1.615	41.0	.450	11.4	.840	21.3	1.120	28.4	.500	12.7	2-56	.285	7.2
67	2.365	60.1	2.015	51.2	.450	11.4	.840	21.3	1.120	28.4	.500	12.7	2-56	.285	7.2
69	2.265	57.5	1.515	38.5	.495	12.6	.840	21.3	1.120	28.4	.500	12.7	2-56	.320	8.1
75	2.110	53.6	1.705	43.3	.495	12.6	.840	21.3	1.120	28.4	.530	13.5	4-40	.320	8.1
100	2.305	58.5	1.800	45.7	.540	13.7	.910	23.1	1.190	30.2	.530	13.5	4-40	.400	10.2

© 2024 Glenair, Inc • 1211 Air Way, Glendale, CA 91201 • 818-247-6000 • www.glenair.com • U.S. CAGE code 06324 • Rectangular Accessories
Dimensions in Inches (millimeters) are subject to change without notice.

507-198
Deep Straight Clamp Backshell

- Solid Backshell
- Saddle Bar Strain Relief
- For Unshielded Cable

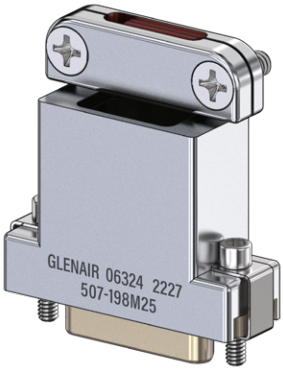

507-198

This accessory fits MWDM and M83513 Class M metal shell Micro-D connectors

Straight clamp. 507-198 strain relief backshell fits metal shell Micro-D connectors. Use with unshielded wire bundles. Flat saddle bars have silicone pads. Connector is retained with clips. Available with screwlocks, jackscrews or female jackposts. Aluminum with stainless steel screws and clips.

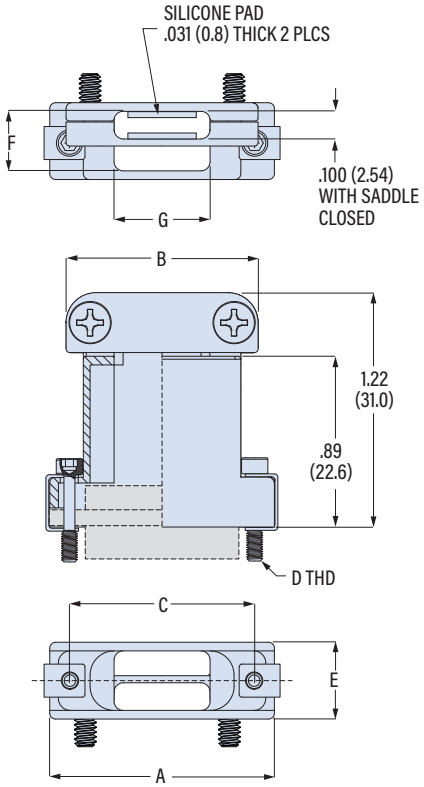

PART NUMBER

Sample PN➜	507-198	MT	37	F

Base P/N	507-198	
Finish	TZ Tin-Zinc JF Cadmium w/ Yellow Chromate M Electroless Nickel MT Nickel-PTFE ZR Black Zinc-Nickel Z2 Gold	
Shell Size	09 15 21 25 31 37 51 51-2 67 69 75 100 130	
Hardware (Table 1)	*Omit* Socket Head Male Screwlock HJ Socket Head Male Jackscrew F Female Hex Post	*Jackscrews must be fastened to mate connectors. Screwlocks float and allow the connectors to be mated before the screws are fastened.*

Size	A Max in	A Max mm	B Max in	B Max mm	C in	C mm	DThd UNC-2	E Max in	E Max mm	F in	F mm	G in	G mm
09	.850	21.6	.840	21.3	.565	14.4	2-56	.420	10.7	.310	7.9	.310	7.9
15	1.000	25.4	.910	23.1	.715	18.2	2-56	.420	10.7	.310	7.9	.380	9.7
21	1.150	29.2	.970	24.6	.865	22.0	2-56	.420	10.7	.310	7.9	.440	11.2
25	1.250	31.8	1.030	26.2	.965	24.5	2-56	.420	10.7	.310	7.9	.500	12.7
31	1.400	35.6	1.080	27.4	1.115	28.3	2-56	.420	10.7	.310	7.9	.550	14.0
37	1.550	39.4	1.130	28.7	1.265	32.1	2-56	.420	10.7	.310	7.9	.600	15.2
51	1.500	38.1	1.080	27.4	1.215	30.9	2-56	.470	11.9	.360	9.1	.550	14.0
51-2	1.910	48.5	1.480	37.6	1.615	41.0	2-56	.420	10.7	.310	7.9	.950	24.1
67	2.310	58.7	1.880	47.8	2.015	51.2	2-56	.420	10.7	.310	7.9	1.350	34.3
69	1.810	46.0	1.380	35.1	1.515	38.5	2-56	.470	11.9	.360	9.1	.850	21.6
75	2.150	54.4	1.720	43.7	1.705	43.3	4-40	.470	11.9	.360	9.1	1.190	30.2
100	2.235	56.8	1.650	41.9	1.800	45.7	4-40	.510	13.0	.400	10.2	1.000	25.4
130	2.585	65.7	2.155	54.7	2.150	54.6	4-40	.510	13.0	.400	10.2	1.350	34.3

TABLE 1
SCREWLOCK AND JACKSCREW OPTIONS

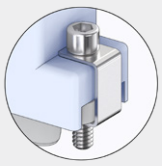

No Designator
Socket Head Screwlocks

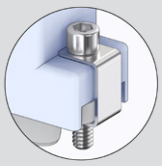

HJ
Socket Head Jackscrews

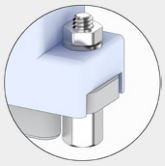

F
Female Hex Post

CLIP
CLIP HAS CIRCULAR HOLE AND SQUARE HOLE.

SCREWLOCK
SQUARE HOLE IS ON THE TOP. SCREW IS FLOATING. MATE CONNECTORS FIRST, THEN FASTEN SCREWLOCKS.

JACKSCREW
SQUARE HOLE IS ON THE BOTTOM. SCREW IS CAPTIVE. TURN SCREWS TO JACK CONNECTORS TOGETHER.

507-299
EMI Banding Backshell, MLDM

- For MLDM Connectors
- Micro Band Shield Termination
- Top, End and Side Entry

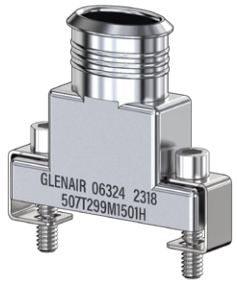

T Top Entry

S 90° Entry

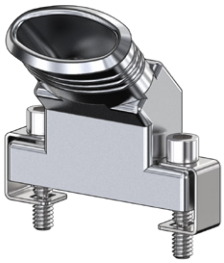

E 45° Entry

507-299

This accessory fits MLDM metal shell and MWDL plastic shell Micro-D connectors

Lightweight, elliptical entry. 507-299 EMI banding backshell fits MLDM low-profile metal shell Micro-D connectors. Terminate cable shield to backshell with BandMaster ATS .12" wide Micro band strap. Available with male or female screwlocks. Screwlocks allow connectors to be fully mated prior to fastening screws. Aluminum with passivated stainless steel screws and retainer clips.

TABLE 1 SCREWLOCK OPTIONS

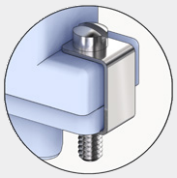

No Designator
Fillister Head

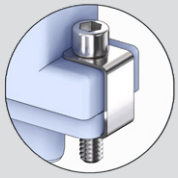

H
Socket Head

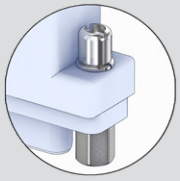

F
Female Hex Post

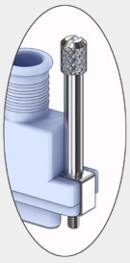

E
Extended

PART NUMBER

Sample PN➜ **507T299 JF 37 05 H J**

Base P/N

Base Part No.	Profile
507T299	T Top Entry
507S299	S 90° Entry
507E299	E 45° Entry

Finish

TZ	Tin-Zinc
JF	Cadmium w/ Yellow Chromate
M	Electroless Nickel
MT	Nickel-PTFE
ZR	Black Zinc-Nickel
Z2	Gold

Shell Size

9 15 21 25 31 37 51 51-2

Entry Size

Entry Size	L	Shell Size
01	.344 (8.7)	9 thru 51-2
02	.494 (12.5)	15 thru 51-2
03	.644 (16.4)	21 thru 51-2
04	.744 (18.9)	25 thru 51-2
05	.894 (22.7)	31 thru 51-2
06	.994 (25.2)	37 thru 51-2
07	1.044 (26.5)	37 and 51-2

ENTRY SIZE

Jackscrews *(Table 1)*

Omit	Fillister Head Male Screwlocks
E	Extended Male Screwlocks
F	Female Screwlocks
H	Socket Head Male Screwlocks

Band

Omit	No Band
M	Micro Band Included
J	Micro Slim Band Included
L	Micro-Max Band Included

© 2024 Glenair, Inc • 1211 Air Way, Glendale, CA 91201 • 818-247-6000 • www.glenair.com • U.S. CAGE code 06324 • Rectangular Accessories
Dimensions in Inches (millimeters) are subject to change without notice.

507-299
EMI Banding Backshell, MLDM

- For MLDM Connectors
- Micro Band Shield Termination
- Top, End and Side Entry

T Top Entry

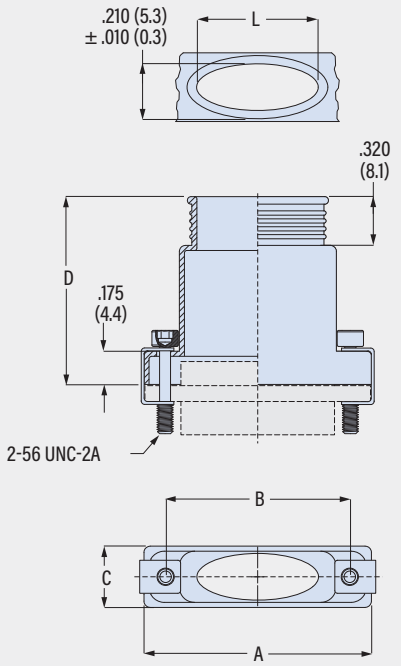

S 90° Entry

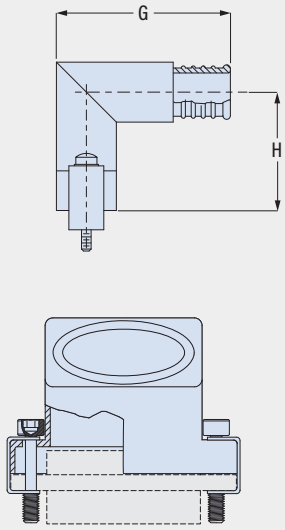

E 45° Entry

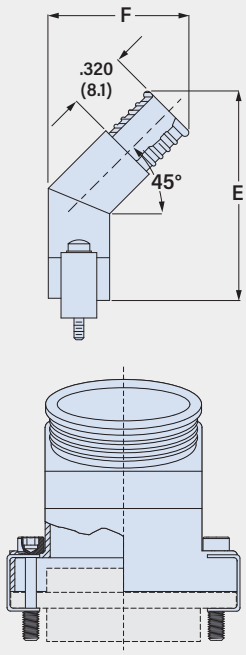

Shell Size	A Max in	A Max mm	B ± .005 (0.13) in	B ± .005 (0.13) mm	C ± .005 (0.13) in	C ± .005 (0.13) mm	D ± .020 (0.5) in	D ± .020 (0.5) mm	E Max in	E Max mm	F Max in	F Max mm	G Max in	G Max mm	H Max in	H Max mm	Max Entry
9	.785	19.9	.565	14.4	.265	6.7	.762	19.4	.851	21.6	.673	17.1	.970	24.6	.668	17.0	01
15	.935	23.7	.715	18.2	.265	6.7	.812	20.6	.876	22.3	.673	17.1	.970	24.6	.668	17.0	02
21	1.085	27.6	.865	22.0	.265	6.7	.862	21.9	.901	22.9	.673	17.1	.970	24.6	.668	17.0	03
25	1.185	30.1	.965	24.5	.265	6.7	.912	23.2	.943	24.0	.700	17.8	.990	25.1	.678	17.2	04
31	1.335	33.9	1.115	28.3	.265	6.7	.952	24.2	.963	24.5	.700	17.8	.990	25.1	.678	17.2	05
37	1.485	37.7	1.265	32.1	.265	6.7	.952	24.2	.983	25.0	.700	17.8	.990	25.1	.678	17.2	07
51	1.435	36.4	1.215	30.9	.305	7.7	1.072	27.2	1.050	26.7	.758	19.3	1.030	26.2	.698	17.7	06
51-2	1.845	46.9	1.615	41.0	.265	6.7	1.072	27.2	1.050	26.7	.758	19.3	1.030	26.2	.698	17.7	07

Entry Size	L ± .010 (0.3) in	L ± .010 (0.3) mm	Available Shell Sizes
01	.344	8.7	9 thru 51-2
02	.494	12.5	15 thru 51-2
03	.644	16.4	21 thru 51-2
04	.744	18.9	25 thru 51-2
05	.894	22.7	31 thru 51-2
06	.994	25.2	37 thru 51-2
07	1.044	26.5	37 and 51-2

BAND OPTIONS

Terminate cable braid to backshell with optional band strap and banding tool. Pre-coiled bands are passivated stainless steel. Micro Slim bands have reduced thickness for weight reduction. Micro-Max bands are high-tension for lower-resistivity termination.

Band Type and Width	Hand Tool	Pneumatic Tool
Micro: .12 (3.0)	601-101	601-107
Micro Slim: .12 (3.0)	601-122	601-123
Micro-Max: .12 (3.0)	601-129	601-118

© 2024 Glenair, Inc • 1211 Air Way, Glendale, CA 91201 • 818-247-6000 • www.glenair.com • U.S. CAGE code 06324 • Rectangular Accessories
Dimensions in Inches (millimeters) are subject to change without notice.

ULTRA-LOW-PROFILE
CRIMP-CONTACT RECTANGULAR SERIES

Backshells

Series 79 micro miniature crimp-contact rectangular with advanced environmental and EMC performance

Series 79 is an advanced-performance, micro miniature crimp-contact rectangular connector for mission-critical mil-aero applications. The Series 79 is a high-density rectangular equivalent of the Glenair circular Mighty Mouse connector series. It is available with size #23 39029 crimp contacts set on .075" centers, as well as dozens of hybrid contact layouts supporting contact sizes up to #8. Special product line extensions include Series 791 (scoop-proof) and Series 792 (high-speed with common ground plane). Environmentally sealed and shrouded for EMC, the Series 79 meets the need for a higher-performing, precision-machined micro-sized rectangular with industry-standard crimp-and-poke contacts.

Glenair Signature Series 79 Micro-Crimp Backshells

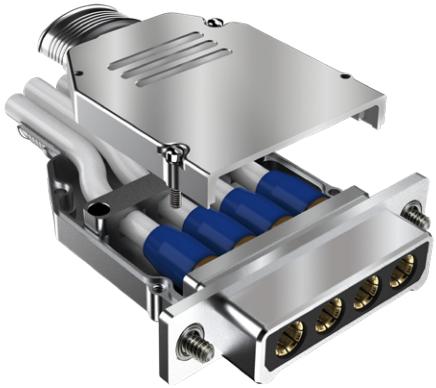

This precision-machined 799-164 non-environmental piggyback backshell fits Series 792 connectors. Backshell has internal fluorosilicone wire strain relief grommet optimized for axial alignment and support of twinax, quadrax or octaxial Ethernet cables.

Series 79 Micro-Crimp® Accessories Selection Guide

Dust Caps & Covers

Anti-Static Dust Cap
Series 790
799-013
Page C-3

Anti-Static Dust Cap
Series 791
799-064, -065
Page C-4

Protective Cover
Series 790
799-018, -019
Page C-5

Protective Cover
Series 791
799-038, -039
Page C-7

Shorting Cap

Piggyback Shorting Cap
Series 790 & 791
799-067
Page C-9

Jackposts and Jackscrews

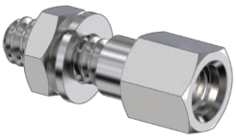

Jackpost
Rear Panel Mount
799-117, 799-176
Page C-10

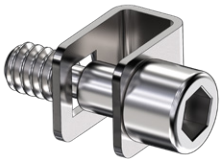

Jackscrew
with Clip
799-172
Page C-12

Series 790 EMI Backshell

Elliptical Entry
Series 790
799-011
Page C-13

Series 790, 791, 792 Piggyback EMI Backshells

Piggyback EMI
Split Elliptical Entry
Series 790 & 791
799-015
Page C-15

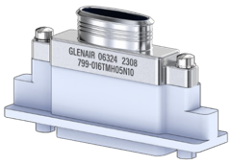

Piggyback EMI
Panel Mount
Series 790 & 791
799-016
Page C-16

Piggyback EMI
Dual Port
Series 790 & 791
799-131
Page C-18

Piggyback EMI
Size #8 Contacts
Series 792
799-164
Page C-19

Band-Master ATS®

Shield Termination Bands and Tools

Band-Master ATS®

Terminate cable braid shield to adapter with stainless steel ***Band-Master ATS®*** bands. Install band with hand tool or bench-mounted pneumatic tool. Bands are available in ***Standard*** (.24 inch) and ***Micro*** (.12 inch) widths. ***Slim Standard*** and ***Micro Slim*** bands have reduced thickness for weight reduction. Hardened steel ***Micro-Max*** bands have 60% more tensile strength than standard Micro bands. Available pre-coiled, bands are 304 series stainless steel, passivated.

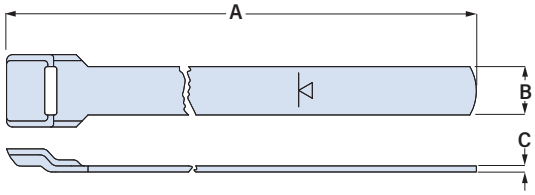

For more information on the Band-Master ATS EMI shield termination system, including instruction manuals and calibration details:
https://www.glenair.com/bandmaster/

Band and Band Tool Part Numbers

Size		A Length in	A Length mm	Fits up to Dia. in	Fits up to Dia. mm	B Width in	B Width mm	C Thickness in	C Thickness mm	Part Number Pre-coiled	Hand Tool Part Number
Standard		9	228	1.00	25.4	.24	6.1	.02	0.5	601-006	601-100
		14	355	1.80	45.7	.24	6.1	.02	0.5	601-041	
		18	457.	2.50	63.5	.24	6.1	.02	0.5	601-050	
Slim Standard		9	228	.94	23.9	.24	6.1	.01	0.3	601-571	601-109
		14	355	1.80	45.7	.24	6.1	.01	0.3	601-573	
Micro		5	127	.50	12.7	.12	3.0	.015	0.4	601-025	601-101
		8	203	.88	22.4	.12	3.0	.015	0.4	601-061	
		14	356	1.88	47.7	.12	3.0	.015	0.4	601-065	
Micro Slim		8	203	.88	22.4	.12	3.0	.01	0.3	601-601	601-122
		14	356	1.88	47.7	.12	3.0	.01	0.3	601-603	
Micro-Max		8	203	.88	22.4	.12	3.0	.015	0.4	601-701	601-129
		14	356	1.88	47.7	.12	3.0	.015	0.4	601-703	

© 2024 Glenair, Inc • 1211 Air Way, Glendale, CA 91201 • 818-247-6000 • www.glenair.com • U.S. CAGE code 06324 • Rectangular Accessories
Dimensions in Inches (millimeters) are subject to change without notice.

799-013

Dust Cap, Anti-Static, Series 790

799-013

This accessory fits Series 790 connectors.

Permanently anti-static. Non-sloughing. Molded dust caps protect Series 790 connectors from contamination and static discharge.

- **Black LDPE Material**
- **Static Decay per MIL-PRF-81705**
- **Surface Resistivity: 1E10 to 9.9E11 Ohm/SQ**
- **Static Decay: <2 sec @ 5kV to 50V, 12% RH**

PART NUMBER

Shell Size	Type	Part No.	A Max in	A Max mm	C Max in	C Max mm
A	Plug	799-013AP	.540	13.7	.436	11.1
	Recep	799-013AR	.587	14.9	.477	12.1
B	Plug	799-013BP	.690	17.5	.436	11.1
	Recep	799-013AR	.737	18.7	.477	12.1
C	Plug	799-013CP	.840	21.3	.436	11.1
	Recep	799-013CR	.887	22.5	.477	12.1
D	Plug	799-013DP	.940	23.9	.436	11.1
	Recep	799-013DR	.987	25.1	.477	12.1
E	Plug	799-013EP	1.090	27.7	.436	11.1
	Recep	799-013ER	1.137	28.9	.477	12.1
F	Plug	799-013FP	1.239	31.5	.436	11.1
	Recep	799-013FR	1.287	32.7	.477	12.1
G	Plug	799-013GP	1.213	30.8	.529	13.4
	Recep	799-013GR	1.260	32.0	.560	14.2
H	Plug	799-013HP	1.586	40.3	.552	14.0
	Recep	799-013HR	1.631	41.4	.587	14.9
J	Plug	799-013JP	1.595	40.5	.436	11.1
	Recep	799-013JR	1.642	41.7	.477	12.1
K	Plug	799-013KP	1.998	50.7	.436	11.1
	Recep	799-013KR	2.045	51.9	.477	12.1
L	Plug	799-013LP	1.823	46.3	.552	14.0
	Recep	799-013LR	1.867	47.4	.587	14.9
M	Plug	799-013MP	1.878	47.7	.612	15.5
	Recep	799-013MR	1.931	49.0	.647	16.4
N	Plug	799-013NP	2.265	57.5	.685	17.4
	Recep	799-013NR	2.335	59.3	.765	19.4

SHELL SIZE A-G, J, K

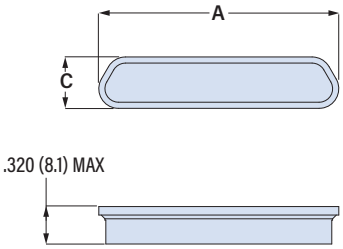

SHELL SIZE H, L, M, N

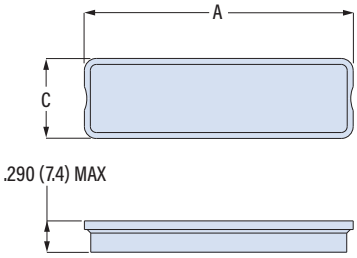

799-064, 799-065

Dust Cap, Anti-Static, Series 791

799-064, 799-065

This accessory fits Series 791 Scoop-Proof connectors.

Permanently anti-static. Non-sloughing. Molded dust caps protect Series 790 connectors from contamination and static discharge.

- **Black LDPE Material**
- **Static Decay per MIL-PRF-81705**
- **Surface Resistivity: 1E5 to 9.9E11 Ohm/SQ**
- **Static Decay: <2 sec @ 5kV to 50V, 12% RH**

PART NUMBER

Shell Size	Type	Part No.	A Max in	A Max mm	C Max in	C Max mm
A	Plug	799-064A	.628	16.0	.524	13.3
	Recep	799-065A	.698	17.7	.594	15.1
B	Plug	799-064B	.778	19.8	.524	13.3
	Recep	799-065B	.848	21.5	.594	15.1
C	Plug	799-064C	.928	23.6	.524	13.3
	Recep	799-065C	.998	25.3	.594	15.1
D	Plug	799-064D	1.003	25.5	.524	13.3
	Recep	799-065D	1.073	27.3	.594	15.1
E	Plug	799-064E	1.153	29.3	.524	13.3
	Recep	799-065E	1.223	31.1	.594	15.1
F	Plug	799-064F	1.303	33.1	.524	13.3
	Recep	799-065F	1.373	34.9	.594	15.1
G	Plug	799-064G	1.265	32.1	.612	15.5
	Recep	799-065G	1.335	33.9	.682	17.3
H	Plug	799-064H	1.655	42.0	.630	16.0
	Recep	799-065H	1.725	43.8	.700	17.8
J	Plug	799-064J	1.678	42.6	.524	13.3
	Recep	799-065J	1.748	44.4	.594	15.1
K	Plug	799-064K	2.053	52.1	.524	13.3
	Recep	799-065K	2.123	53.9	.594	15.1
L	Plug	799-064L	1.891	48.0	.630	16.0
	Recep	799-065L	1.961	49.8	.700	17.8
M	Plug	799-064M	1.952	49.6	.714	18.1
	Recep	799-065M	2.022	51.4	.784	19.9

799-064
Anti-Static Dust Cap for Series 791 Plug Connector

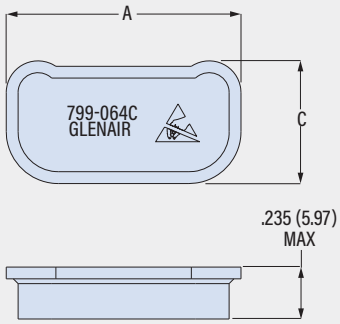

799-065
Anti-Static Dust Cap for Series 791 Receptacle Connector

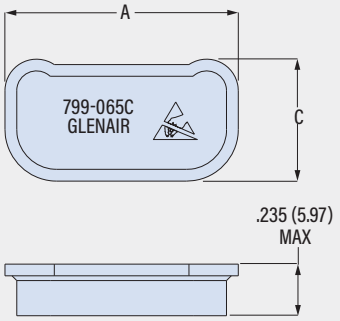

© 2024 Glenair, Inc • 1211 Air Way, Glendale, CA 91201 • 818-247-6000 • www.glenair.com • U.S. CAGE code 06324 • Rectangular Accessories
Dimensions in Inches (millimeters) are subject to change without notice.

799-018 and 799-019
Protective Cover, Series 790

- Fits Series 790 Connectors
- Environmental
- Conductive EMI Gasket

799-018, 799-019

This accessory fits Series 790 Micro-Crimp plug and receptacle connectors

Protective cover has conductive gasket for dust, moisture and EMI protection. Available with lanyard for panel or cable attachment. Aluminum with stainless steel screws and washers. Gasket is Cho-Seal 1287 Ag/Al-filled fluorosilicone.

TABLE 1
ATTACHMENT TYPE

F — **Wire Rope, Blue Nylon Jacket**
6/6 nylon over stainless steel rope, fair flexibility, good abrasion resistance, -55 to +100 °C

G — **Black Nylon Rope**
Very flexible, good abrasion and fuel resistance, .062 (1.6) diameter, -55 to +100 °C

H — **Wire Rope, Clear FEP Jacket**
Clear FEP jacket over SST rope, fair flexibility, good abrasion resistance, .100" diameter, -65 to +200 °C

SK — **Nylon Rope with Slip Knot**
Very flexible, good abrasion and fuel resistance, .094 (2.4) diameter. Length includes .5" (13mm) dia. loop, -55 to +100 °C

T — **SST Wire Rope, No Jacket**
Good flexibility, good abrasion resistance, .047 (1.2) diameter, passivated, -65 to +200 °C

PART NUMBER

Sample PN➜ **799-018 M F MB F 6 -06**

Base P/N

799-018	Plug Cover
799-019	Receptacle Cover

Finish

TZ	Tin-Zinc
M	Electroless Nickel
MT	Nickel-PTFE
ZR	Black Zinc-Nickel

Shell Size

A B C D E F G H J K L M

Screwlocks

MB Fillister Head

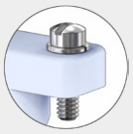

MH Socket Head

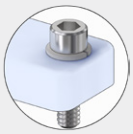

MF Female Post

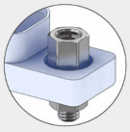

- Jackscrews Omitted

Attachment Type *(Table 1)*

N	No Attachment
F	SST Wire Rope, Nylon Jacket
G	Nylon Rope
H	SST Wire Rope, FEP Jacket
SK	Nylon Rope with Slip Knot
T	SST Wire Rope, No Jacket

Attachment Length

Omit If No Attachment
Length in One Inch Increments

Attachment Ring

Omit If No Attachment
Omit for Attachment Type SK

EYELET		RING		SPLIT RING	
Code	Eyelet I.D.	Code	Ring I.D.	Code	Ring I.D.
-01	.125 (3.2)	-14	.385 (9.8)	-50	.425 (10.8)
-02	.140 (3.6)	-15	.445 (11.3)	-52	.485 (12.3)
-04	.182 (4.6)	-16	.570 (14.5)	-54	.640 (16.3)
-06	.197 (5.0)	-17	.635 (16.1)	-56	.750 (19.1)
		-18	.695 (17.7)	-58	.890 (22.6)
		-19	.885 (22.5)	-60	1.010 (25.7)
		-20	1.070 (27.2)	-64	1.125 (28.6)
				-68	1.345 (34.2)

799-018 and 799-019

Protective Cover, Series 790

- Fits Series 790 Connectors
- Environmental
- Conductive EMI Gasket

799-018

Protective Cover for Plug Connector

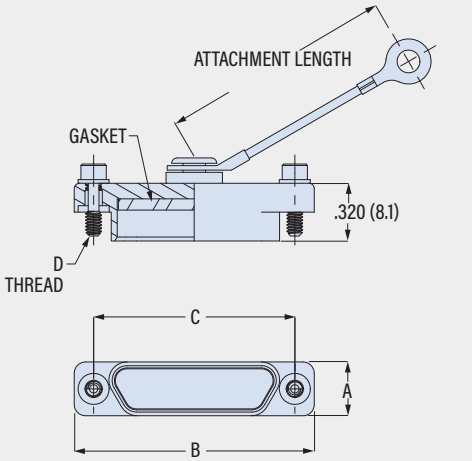

SIZES A-G, J & K

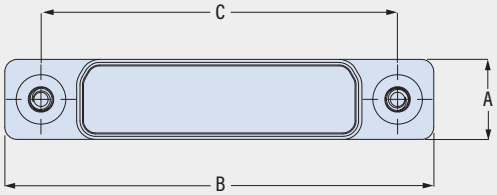

SIZES H, L, M

799-019

Protective Cover for Receptacle Connector

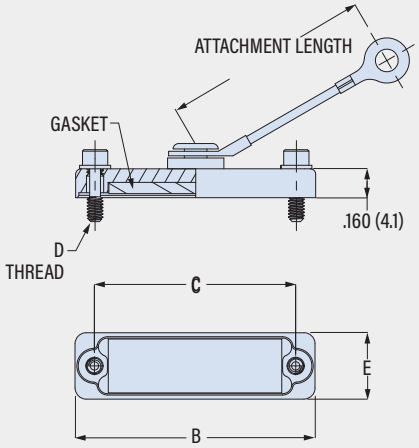

SIZES A-G, J & K

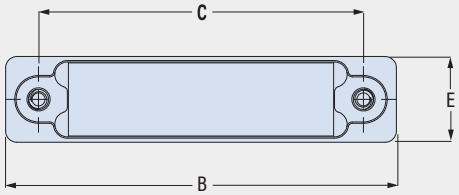

SIZES H, L, M

Shell Size	A Max in	A Max mm	B Max in	B Max mm	C in	C mm	D Thread	E in	E mm
A	.308	7.8	.785	19.9	.565	14.4	2-56 UNC	.385	9.8
B	.308	7.8	.935	23.7	.715	18.2	2-56 UNC	.385	9.8
C	.308	7.8	1.085	27.6	.865	22.0	2-56 UNC	.385	9.8
D	.308	7.8	1.185	30.1	.965	24.5	2-56 UNC	.385	9.8
E	.308	7.8	1.335	33.9	1.115	28.3	2-56 UNC	.385	9.8
F	.308	7.8	1.485	37.7	1.265	32.1	2-56 UNC	.385	9.8
G	.395	10.0	1.435	36.4	1.215	30.9	2-56 UNC	.470	11.9
H	.410	10.4	2.170	55.1	1.800	45.7	4-40 UNC	.490	12.4
J	.308	7.8	1.845	46.9	1.615	41.0	2-56 UNC	.385	9.8
K	.308	7.8	2.240	56.9	2.015	51.2	2-56 UNC	.385	9.8
L	.410	10.4	2.406	61.1	2.036	51.7	4-40 UNC	.490	12.4
M	.470	11.9	2.570	65.3	2.200	55.9	6-32 UNC	.550	14.0

© 2024 Glenair, Inc • 1211 Air Way, Glendale, CA 91201 • 818-247-6000 • www.glenair.com • U.S. CAGE code 06324 • Rectangular Accessories
Dimensions in Inches (millimeters) are subject to change without notice.

799-038 and 799-039
Protective Cover, Series 791

- Fits Series 791 Connectors
- Environmental
- Conductive EMI Gasket

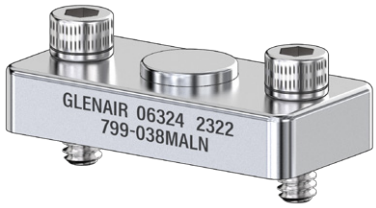

799-038, 799-039

This accessory fits Series 791 Scoop-Proof Micro-Crimp plug and receptacle connectors

Protective cover has conductive gasket for dust, moisture and EMI protection. Plug cover has internal copper alloy ground spring. Available with lanyard for panel or cable attachment. Aluminum with stainless steel screws and washers. Gasket is Cho-Seal 6503 Ni/Al-filled fluorosilicone.

TABLE 1
ATTACHMENT TYPE

F Wire Rope, Blue Nylon Jacket
6/6 nylon over stainless steel rope, fair flexibility, good abrasion resistance, -55 to +100 °C

G Black Nylon Rope
Very flexible, good abrasion and fuel resistance, .062 (1.6) diameter, -55 to +100 °C

H Wire Rope, Clear FEP Jacket
Clear FEP jacket over SST rope, fair flexibility, good abrasion resistance, .100" diameter, -65 to +200 °C

SK Nylon Rope with Slip Knot
Very flexible, good abrasion and fuel resistance, .094 (2.4) diameter. Length includes .5" (13mm) dia. loop, -55 to +100 °C

T SST Wire Rope, No Jacket
Good flexibility, good abrasion resistance, .047 (1.2) diameter, passivated, -65 to +200 °C

PART NUMBER

Sample PN➜ **799-038 M K L F 6 -01**

Base P/N
- **799-038** Receptacle Cover
- **799-039** Plug Cover

Finish
- **TZ** Tin-Zinc
- **M** Electroless Nickel
- **MT** Nickel-PTFE
- **ZR** Black Zinc-Nickel

Shell Size
A B C D E F G H J K L M

Hardware
- **L** Socket Head Male Jackscrews
- **P** Female Hex Jackposts

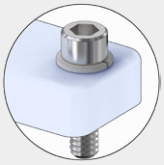

L Socket Head Male

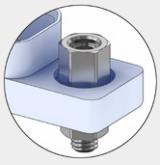

P Female Post

Attachment Type *(Table 1)*
- **N** No Attachment
- **F** SST Wire Rope, Nylon Jacket
- **G** Nylon Rope
- **H** SST Wire Rope, FEP Jacket
- **SK** Nylon Rope with Slip Knot
- **T** SST Wire Rope, No Jacket

Attachment Length
Omit If No Attachment
Length in One Inch Increments

Attachment Ring
Omit If No Attachment
Omit for Attachment Type SK

EYELET		RING		SPLIT RING	
Code	Eyelet I.D.	Code	Ring I.D.	Code	Ring I.D.
-01	.125 (3.2)	-14	.385 (9.8)	-50	.425 (10.8)
-02	.140 (3.6)	-15	.445 (11.3)	-52	.485 (12.3)
-04	.182 (4.6)	-16	.570 (14.5)	-54	.640 (16.3)
-06	.197 (5.0)	-17	.635 (16.1)	-56	.750 (19.1)
		-18	.695 (17.7)	-58	.890 (22.6)
		-19	.885 (22.5)	-60	1.010 (25.7)
		-20	1.070 (27.2)	-64	1.125 (28.6)
				-68	1.345 (34.2)

© 2024 Glenair, Inc • 1211 Air Way, Glendale, CA 91201 • 818-247-6000 • www.glenair.com • U.S. CAGE code 06324 • Rectangular Accessories
Dimensions in Inches (millimeters) are subject to change without notice.

799-038 and 799-039
Protective Cover, Series 791

- Fits Series 791 Connectors
- Environmental
- Conductive EMI Gasket

799-038
Protective Cover for Series 791 Receptacle Connector

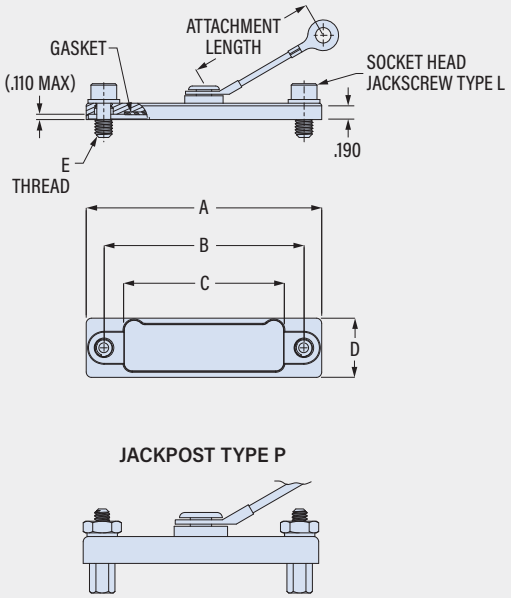

Shell Size	A in	A mm	B in	B mm	C Max in	C Max mm	D Max in	D Max mm	E Thread
A	1.005	25.5	.750	19.1	.525	13.3	.500	12.7	4-40 UNC
B	1.155	29.3	.900	22.9	.675	17.1	.500	12.7	4-40 UNC
C	1.305	33.1	1.050	26.7	.825	21.0	.500	12.7	4-40 UNC
D	1.380	35.1	1.125	28.6	.900	22.9	.500	12.7	4-40 UNC
E	1.530	38.9	1.275	32.4	1.050	26.7	.500	12.7	4-40 UNC
F	1.680	42.7	1.425	36.2	1.200	30.5	.500	12.7	4-40 UNC
G	1.643	41.7	1.388	35.3	1.162	29.5	.595	15.1	4-40 UNC
H	2.295	58.3	1.900	48.3	1.556	39.5	.615	15.6	6-32 UNC
J	2.055	52.2	1.800	45.7	1.575	40.0	.500	12.7	4-40 UNC
K	2.430	61.7	2.175	55.2	1.950	49.5	.500	12.7	4-40 UNC
L	2.531	64.3	2.136	54.3	1.792	45.5	.615	15.6	6-32 UNC
M	2.600	66.0	2.200	55.9	1.855	47.1	.710	18.0	8-32 UNC

799-039
Protective Cover for Series 791 Plug Connector

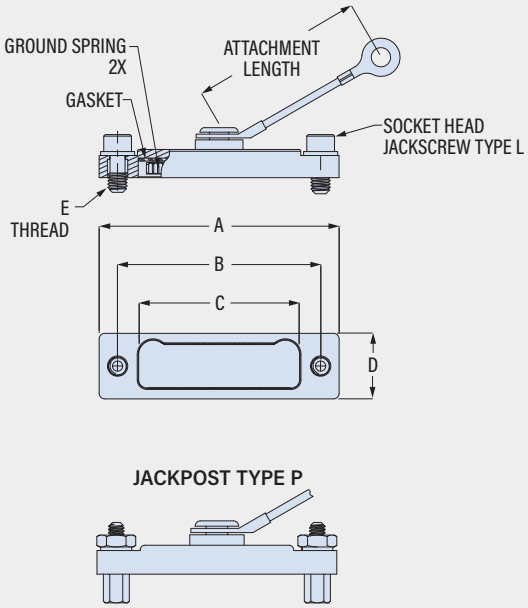

Shell Size	A in	A mm	B in	B mm	C Max in	C Max mm	D Max in	D Max mm	E Thread
A	.975	24.8	.750	19.1	.445	11.3	.415	10.5	4-40 UNC
B	1.125	28.6	.900	22.9	.595	15.1	.415	10.5	4-40 UNC
C	1.275	32.4	1.050	26.7	.745	18.9	.415	10.5	4-40 UNC
D	1.350	34.3	1.125	28.6	.820	20.8	.415	10.5	4-40 UNC
E	1.500	38.1	1.275	32.4	.970	24.6	.415	10.5	4-40 UNC
F	1.650	41.9	1.425	36.2	1.120	28.4	.415	10.5	4-40 UNC
G	1.608	40.8	1.388	35.3	1.082	27.5	.500	12.7	4-40 UNC
H	2.275	57.8	1.900	48.3	1.472	37.4	.520	13.2	6-32 UNC
J	2.025	51.4	1.800	45.7	1.495	38.0	.415	10.5	4-40 UNC
K	2.400	61.0	2.175	55.2	1.865	47.4	.415	10.5	4-40 UNC
L	2.511	63.8	2.136	54.3	1.708	43.4	.520	13.2	6-32 UNC
M	2.515	63.9	2.200	55.9	1.769	44.9	.610	15.5	8-32 UNC

© 2024 Glenair, Inc • 1211 Air Way, Glendale, CA 91201 • 818-247-6000 • www.glenair.com • U.S. CAGE code 06324 • Rectangular Accessories
Dimensions in Inches (millimeters) are subject to change without notice.

799-067

Shorting Cap, Piggyback, Series 79

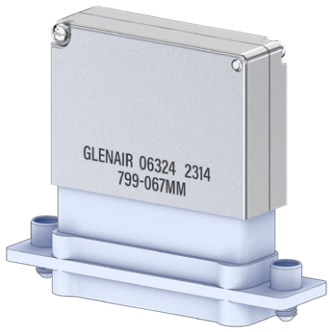

799-067

This accessory fits Series 790 and 791 connectors:
790-024 , 790-025, 791-001, 791-003

Lightweight, split. 799-067 piggyback shorting cap fits Series 790 and 791 connectors with rear groove on shell. Aluminum or stainless steel with stainless steel screws. Non-environmental.

PART NUMBER

Sample PN➜	799-067	M	H
Base P/N	799-067		
Finish	TZ Tin-Zinc M Electroless Nickel MT Nickel-PTFE ZR Black Zinc-Nickel		
Shell Size	A B C D E F G H J K L M		

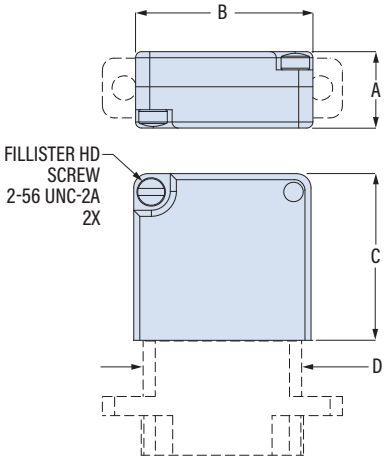

Shell Size	A Max in	A Max mm	B Max in	B Max mm	C Max in	C Max mm	D Max in	D Max mm
A	.390	9.9	.485	12.3	.915	23.2	.390	9.9
B	.390	9.9	.635	16.1	.915	23.2	.540	13.7
C	.390	9.9	.785	19.9	.915	23.2	.690	17.5
D	.390	9.9	.885	22.5	.915	23.2	.790	20.1
E	.390	9.9	1.035	26.3	.915	23.2	.940	23.9
F	.390	9.9	1.185	30.1	.915	23.2	1.090	27.7
G	.470	11.9	1.145	29.1	.915	23.2	1.055	26.8
H	.500	12.7	1.525	38.7	1.165	29.6	1.440	36.6
J	.390	9.9	1.545	39.2	.915	23.2	1.450	36.8
K	.390	9.9	1.945	49.4	.915	23.2	1.840	46.7
L	.500	12.7	1.765	44.8	1.165	29.6	1.675	42.5
M	.560	14.2	1.830	46.5	1.300	33.0	1.740	44.2

© 2024 Glenair, Inc • 1211 Air Way, Glendale, CA 91201 • 818-247-6000 • www.glenair.com • U.S. CAGE code 06324 • Rectangular Accessories
Dimensions in Inches (millimeters) are subject to change without notice.

799-117, 799-176

Jackpost, Female Hex, Rear Panel Mount

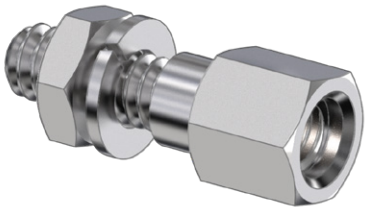

799-117, 799-176

These jackposts fit Series 790, 791 and 792 rear panel mounted connectors:
790-024, 790-025, 791-001, 791-003, 792-001, 792-002

Rear panel mount jackpost kit accomodates panel thicknesses from 1/32 to 1/8 inch. Four thread sizes: 2-56, 4-40, 6-32 and 8-32. Kit consists of (2) female posts, (2) hex nuts and (2) lockwashers. Passivated 300 series stainless steel.

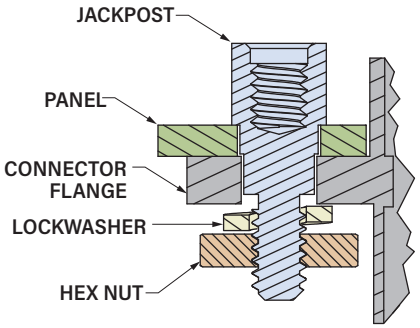

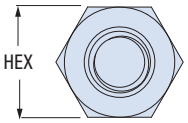

2-56 .156 (4.0)
4-40 .188 (4.8)
6-32 .250 (6.4)
8-32 .250 (6.4)

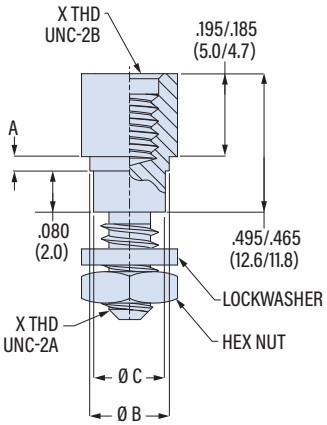

REAR PANEL MOUNT JACKPOST KIT
with (2) posts, (2) nuts and (2) lockwashers

X Thread Size	Shell Size	Panel Thickness in	Panel Thickness mm	Part Number	A ± .003 (0.08) in	A ± .003 (0.08) mm	ø B in	ø B mm	ø C in	ø C mm
2-56	Series 790 A-G, J, K	.032	0.8	799-117-A1	.027	.7	.120	3.0	N/A	N/A
		.050	1.3	799-117-A2	.045	1.1	.120	3.0	N/A	N/A
		.062	1.6	799-117-A3	.057	1.4	.120	3.0	N/A	N/A
		.080	2.0	799-117-A4	.075	1.9	.120	3.0	N/A	N/A
		.093	2.4	799-117-A5	.088	2.2	.120	3.0	N/A	N/A
		.125	3.2	799-117-A6	.120	3.0	.120	3.0	N/A	N/A
4-40	Series 790 H, L; Series 791 A-G, J, K	.032	0.8	799-117-B1	.027	.7	.155	3.9	.140	3.6
		.050	1.3	799-117-B2	.045	1.1	.155	3.9	.140	3.6
		.062	1.6	799-117-B3	.057	1.4	.155	3.9	.140	3.6
		.080	2.0	799-117-B4	.075	1.9	.155	3.9	.140	3.6
		.093	2.4	799-117-B5	.088	2.2	.155	3.9	.140	3.6
		.125	3.2	799-117-B6	.120	3.0	.155	3.9	.140	3.6
6-32	Series 790 M; Series 791 H, L	.032	0.8	799-117-C1	.027	.7	.210	5.3	.163	4.1
		.050	1.3	799-117-C2	.045	1.1	.210	5.3	.163	4.1
		.062	1.6	799-117-C3	.057	1.4	.210	5.3	.163	4.1
		.080	2.0	799-117-C4	.075	1.9	.210	5.3	.163	4.1
		.093	2.4	799-117-C5	.088	2.2	.210	5.3	.163	4.1
		.125	3.2	799-117-C6	.120	3.0	.210	5.3	.163	4.1
8-32	Series 791 M; Series 792 A-F	.032	0.8	799-176-R1	.027	.7	.210	5.3	.190	4.8
		.050	1.3	799-176-R2	.045	1.1	.210	5.3	.190	4.8
		.062	1.6	799-176-R3	.057	1.4	.210	5.3	.190	4.8
		.080	2.0	799-176-R4	.075	1.9	.210	5.3	.190	4.8
		.093	2.4	799-176-R5	.088	2.2	.210	5.3	.190	4.8
		.125	3.2	799-176-R6	.120	3.0	.210	5.3	.190	4.8

SERIES 792 PANEL CUTOUT
(SEE NEXT PAGE FOR 790 & 791)

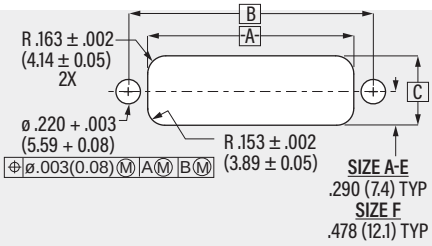

Shell Size	A ± .002 (0.05) in	A ± .002 (0.05) mm	B Basic in	B Basic mm	C ± .002 (0.05) in	C ± .002 (0.05) mm
A	.725	18.42	1.075	27.31	.623	15.82
B	1.100	27.94	1.450	36.83	.623	15.82
C	1.475	37.47	1.825	46.36	.623	15.82
D	1.850	46.99	2.200	55.88	.623	15.82
E	2.225	56.52	2.575	65.41	.623	15.82
F	2.225	56.52	2.575	65.41	.998	25.35

© 2024 Glenair, Inc • 1211 Air Way, Glendale, CA 91201 • 818-247-6000 • www.glenair.com • U.S. CAGE code 06324 • Rectangular Accessories
Dimensions in Inches (millimeters) are subject to change without notice.

799-117, 799-176

Jackpost, Female Hex, Rear Panel Mount

SERIES 790 PANEL CUTOUT

PANEL CUTOUT FOR SERIES 790
SHELL SIZES A-G, J, K

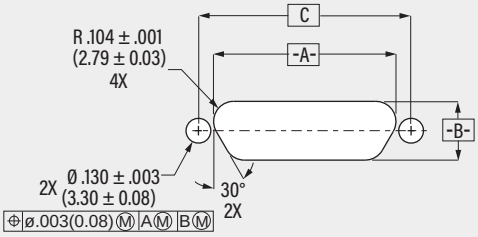

PANEL CUTOUT FOR SERIES 790
SHELL SIZES H AND L

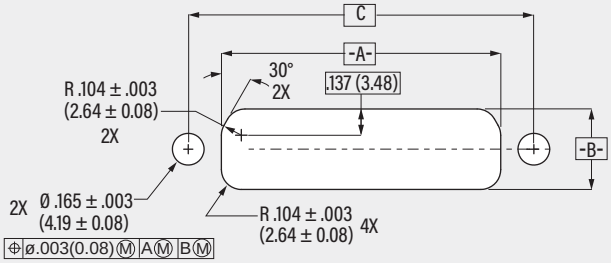

PANEL CUTOUT FOR SERIES 790
SHELL SIZE M

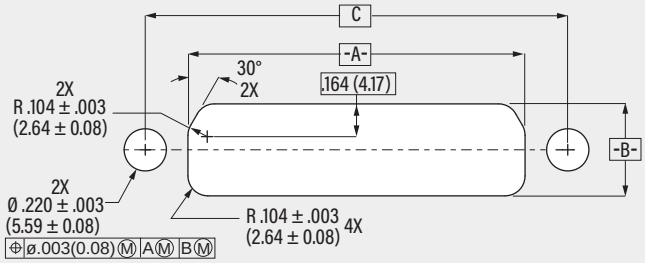

Shell Size	A ± .002 (0.05) in	A ± .002 (0.05) mm	B ± .002 (0.05) in	B ± .002 (0.05) mm	C in	C mm
A	.406	10.31	.306	7.77	.565	14.35
B	.556	14.12	.306	7.77	.715	18.16
C	.706	17.93	.306	7.77	.865	21.97
D	.806	20.47	.306	7.77	.965	24.51
E	.956	24.28	.306	7.77	1.115	28.32
F	1.106	28.09	.306	7.77	1.265	32.13
G	1.084	27.53	.399	10.13	1.215	30.86
H	1.455	36.96	.419	10.64	1.800	45.72
J	1.461	37.11	.306	7.77	1.615	41.02
K	1.864	47.35	.306	7.77	2.015	51.18
L	1.691	42.95	.419	10.64	2.036	51.71
M	1.755	44.58	.479	12.17	2.200	55.88

SERIES 791 PANEL CUTOUT

PANEL CUTOUT FOR SERIES 791
SHELL SIZES A-G, J, K

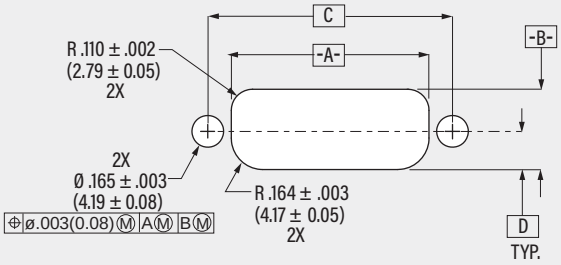

PANEL CUTOUT FOR SERIES 791
SHELL SIZES H AND L

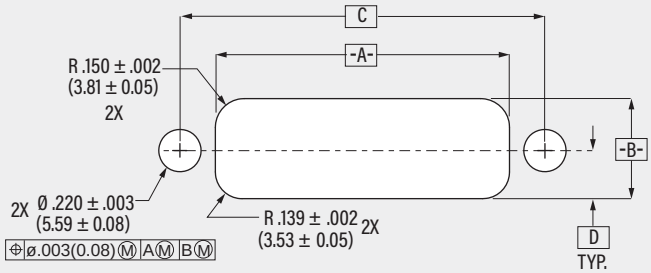

PANEL CUTOUT FOR SERIES 791
SHELL SIZE M

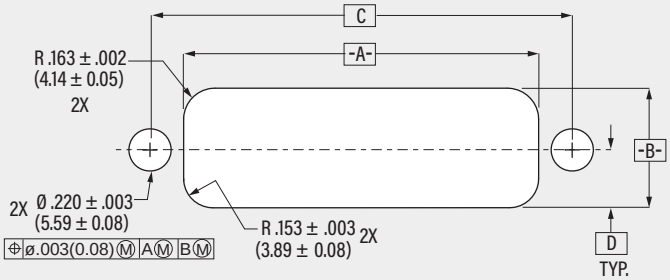

Shell Size	A ± .002 (0.05) in	A ± .002 (0.05) mm	B ± .002 (0.05) in	B ± .002 (0.05) mm	C in	C mm	D in	D mm
A	.505	12.83	.418	10.62	.750	19.50	.199	5.05
B	.655	16.64	.418	10.62	.900	22.86	.199	5.05
C	.805	20.45	.418	10.62	1.050	26.67	.199	5.05
D	.880	22.35	.418	10.62	1.125	28.58	.199	5.05
E	1.030	26.16	.418	10.62	1.275	32.39	.199	5.05
F	1.180	29.97	.418	10.62	1.425	36.20	.199	5.05
G	1.142	29.01	.506	12.85	1.388	35.25	.244	6.20
H	1.531	38.89	.521	13.23	1.900	48.26	.250	6.35
J	1.555	39.50	.418	10.62	1.800	45.72	.199	5.05
K	1.930	49.02	.418	10.62	2.175	55.25	.199	5.05
L	1.767	44.88	.521	13.23	2.136	54.26	.250	6.35
M	1.850	46.99	.623	15.82	2.200	55.88	.290	7.37

© 2024 Glenair, Inc • 1211 Air Way, Glendale, CA 91201 • 818-247-6000 • www.glenair.com • U.S. CAGE code 06324 • Rectangular Accessories
Dimensions in Inches (millimeters) are subject to change without notice.

799-172

Jackscrew, Series 79

- For Connector without Backshell
- Fits Series 790 and 791
- Includes Clip

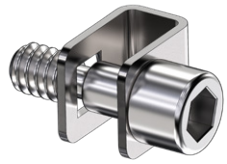

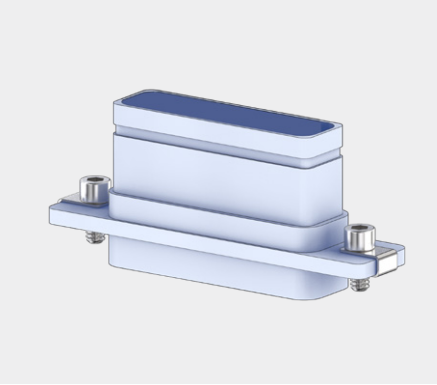

799-172

This accessory fits Series 790 and 791 connectors:
790-024 , 790-025, 791-001, 791-003

Stainless steel jackscrews fit Series 790 and 791 connectors. Kit consists of (2) screws and (2) retainer clip, ***order (1) kit per connector***. Jackscrew and clip are passivated stainless steel.

JACKSCREW KIT *with (2) jackscrews and (2) clips*

A Thread UNC-2A	Shell Size Series 790	Shell Size Series 791	Part Number	B Hex in	B Hex mm	C in	C mm	ø E in	ø E mm	ø F in	ø F mm	G ± .010 (0.2) in	G ± .010 (0.2) mm	J ± .010 (0.2) in	J ± .010 (0.2) mm	K in	K mm
2-56	A-G, J, K	—	799-172-1	5/64	2.0	.140	3.6	.083	2.1	.095	2.4	.210	5.3	.172	4.4	.072	1.8
4-40	H, L	A-G, J, K	799-172-2	3/32	2.4	.183	4.6	.109	2.8	.121	3.1	.325	8.3	.250	6.4	.091	2.3
6-32	M	H, L	799-172-3	7/64	2.8	.226	5.7	.135	3.4	.147	3.7	.350	8.9	.250	6.4	.112	2.8
8-32		M	799-172-4	9/64	3.6	.270	6.9	.161	4.1	.173	4.4	.375	9.5	.275	7.0	.141	3.6

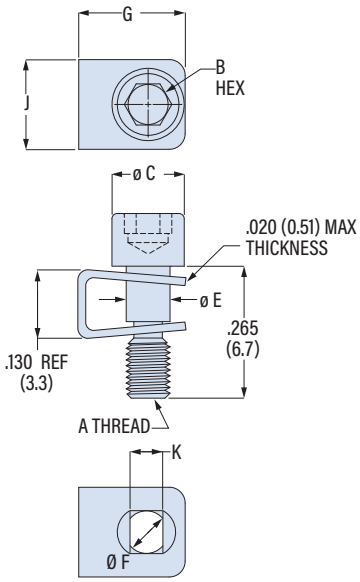

© 2024 Glenair, Inc • 1211 Air Way, Glendale, CA 91201 • 818-247-6000 • www.glenair.com • U.S. CAGE code 06324 • Rectangular Accessories
Dimensions in Inches (millimeters) are subject to change without notice.

799-011

EMI Banding Backshell, Micro-Crimp®

- Solid, Elliptical Entry
- Band-Master® Shield Termination
- Top and Side Entry

T Top Entry

799-011

This accessory fits Series 790 connectors: 790-024 and 790-025

EMI, banding elliptical entry. 799-011 backshell fits Series 790 connectors *790-024* and *790-025*. Terminate cable shield to backshell with BandMaster ATS band strap. Connector flange sits inside backshell. Optional Qwik-Ty strain relief arm. Aluminum or stainless steel with stainless steel screwlocks and retainer clips.

TABLE 1
SCREWLOCK OPTIONS

B Fillister Head

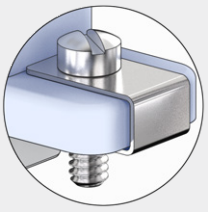

H Socket Head

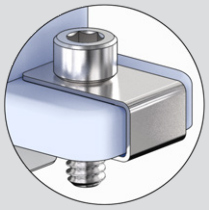

E Extended Slotted

F Female Post

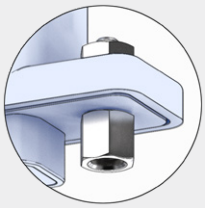

PART NUMBER

Sample PN → **799-011T M H 01 H N T 08**

Base P/N

799-011T	T	Top Entry
799-011S	S	Side Entry

Material / Finish

TZ	Alum / Tin-Zinc
M	Alum / Electroless Nickel
MT	Alum / Nickel-PTFE
ZR	Alum / Black Zinc-Nickel
Z1	SST / Passivated

Shell Size

A B C D E F G H J K L M

Entry Size

Entry Size	E	Shell Size
01	.300 (7.6)	A thru M
02	.450 (11.4)	B thru M
03	.600 (15.2)	C thru M
04	.700 (17.8)	D thru M
05	.850 (21.6)	E thru M
06	.965 (24.5)	F thru M
07	1.155 (29.3)	H thru M
08	1.345 (34.2)	H thru M
09	1.460 (37.1)	K thru M
10	1.580 (40.1)	K thru M
11	1.760 (44.7)	K
12	1.645 (41.8)	K and M

ENTRY SIZE

Screwlocks *(Table 1)*

B	Fillister Head Male
E	Extended Male
F	Female Jackpost
H	Socket Head Male

Band

N	No Band	M	Micro Band Included
B	Standard Band Included	J	Micro Slim Band Included
S	Slim Standard Band Included	L	Micro-Max Band Included

Qwik-Ty®

T	Qwik-Ty Strain Relief Arm Included
N	No Qwik-Ty

Height Code

Height Code	Height	Available Profiles
06	.750 (19.1)	T
07	.875 (22.2)	T
08	1.000 (25.4)	T S
09	1.125 (28.6)	T S
10	1.250 (31.8)	T S

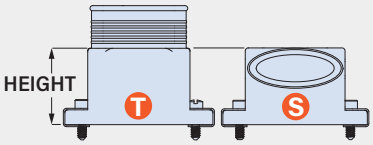

799-011

EMI Banding Backshell, Micro-Crimp

- Solid with Elliptical Entry
- Band-Master® Shield Termination
- Top and Side Entry

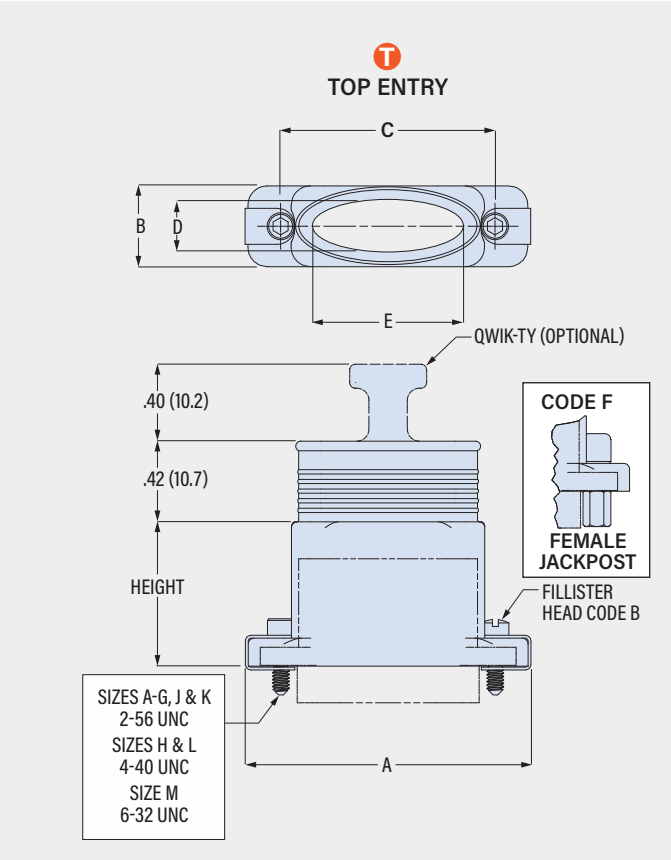

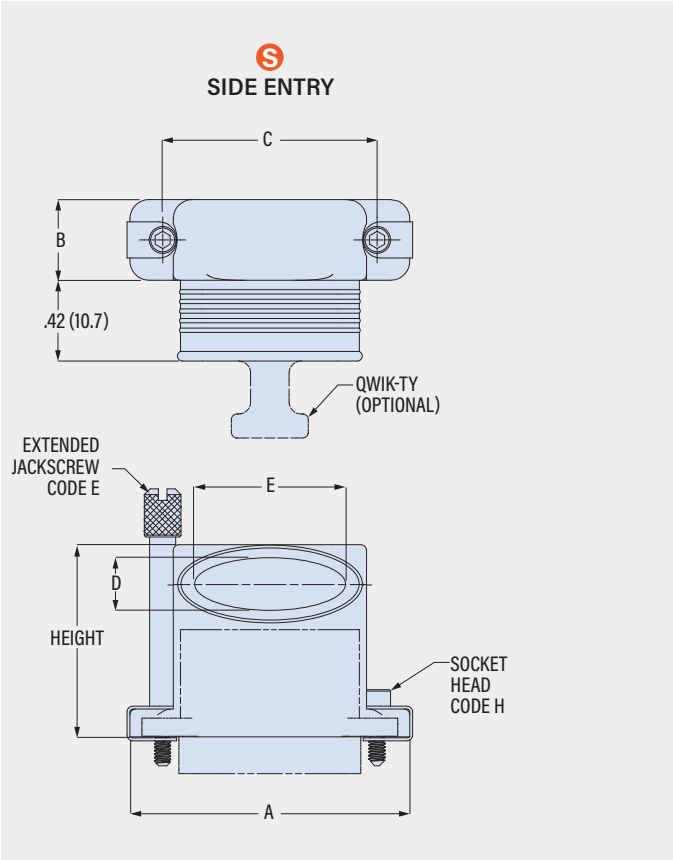

Shell Size	A Max in	A Max mm	B Max in	B Max mm	C in	C mm	D in	D mm	Available Entries	Entry Size	E in	E mm	Available Sizes
A	.935	23.7	.450	11.4	.565	14.4	.300	7.6	01	01	.300	7.6	A thru M
B	1.085	27.6	.450	11.4	.715	18.2	.300	7.6	01 thru 02	02	.450	11.4	B thru M
C	1.235	31.4	.450	11.4	.865	22.0	.300	7.6	01 thru 03	03	.600	15.2	C thru M
D	1.335	33.9	.450	11.4	.965	24.5	.300	7.6	01 thru 04	04	.700	17.8	D thru M
E	1.485	37.7	.450	11.4	1.115	28.3	.300	7.6	01 thru 05	05	.850	21.6	E thru M
F	1.635	41.5	.450	11.4	1.265	32.1	.300	7.6	01 thru 06	06	.965	24.5	F thru M
G	1.585	40.3	.533	13.5	1.215	30.9	.383	9.7	01 thru 06	07	1.155	29.3	H thru M
H	2.320	58.9	.560	14.2	1.800	45.7	.410	10.4	01 thru 08	08	1.345	34.2	H thru M
J	1.990	50.5	.450	11.4	1.615	41.0	.300	7.6	01 thru 08	09	1.460	37.1	K thru M
K	2.385	60.6	.450	11.4	2.015	51.2	.300	7.6	01 thru 12	10	1.580	40.1	K thru M
L	2.556	64.9	.560	14.2	2.036	51.7	.410	10.4	01 thru 10	11	1.760	44.7	K
M	2.720	69.1	.620	15.7	2.200	55.9	.470	11.9	01 thru 10, 12	12	1.645	41.8	K and M

SCREWLOCKS

CLIP
Clip has circular hole and square hole.

ASSEMBLY
INSTALL CLIP WITH SQUARE HOLE ON TOP.
Screw is floating. Mate connectors first, then fasten screwlocks.

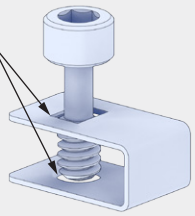

BAND OPTIONS

Terminate cable braid to backshell with optional band strap and banding tool. Pre-coiled bands are passivated stainless steel. Slim Standard bands have reduced thickness for weight reduction. Micro Slim bands have reduced thickness for weight reduction. Micro-Max bands are high-tension for lower-resistivity termination.

Band Type and Width	Hand Tool	Pneumatic
Standard: .24 (6.1)	601-100	601-106
Slim Standard: .24 (6.1)	601-109	601-110
Micro: .12 (3.0)	601-101	601-107
Micro Slim: .12 (3.0)	601-122	601-123
Micro-Max: .12 (3.0)	601-129	601-118

© 2024 Glenair, Inc • 1211 Air Way, Glendale, CA 91201 • 818-247-6000 • www.glenair.com • U.S. CAGE code 06324 • Rectangular Accessories
Dimensions in Inches (millimeters) are subject to change without notice.

799-015
Piggyback EMI Banding Backshell

- Piggyback 2 Piece, Elliptical Entry
- Band-Master® Shield Termination
- Top and Side Entry

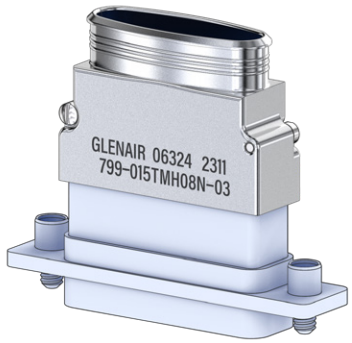

799-015

This accessory fits Series 790 and 791 connectors:
790-024 , 790-025, 791-001, 791-003

EMI, lightweight, split. 799-015 piggyback backshell fits Series 790 and 791 connectors with rear groove on shell. Terminate cable shield to backshell with BandMaster ATS band strap. Aluminum or stainless steel with stainless steel screws. Non-environmental.

T
TOP ENTRY

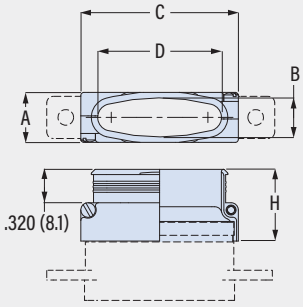

S
SIDE ENTRY

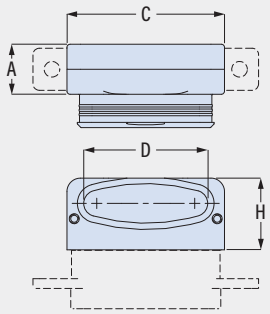

PART NUMBER

Sample PN➜ **799-015T MT M 09 N -01**

Base P/N
- **799-015T** T Top Entry
- **799-015S** S Side Entry

Material / Finish
- **TZ** Alum / Tin-Zinc
- **M** Alum / Electroless Nickel
- **MT** Alum / Nickel-PTFE
- **ZR** Alum / Black Zinc-Nickel
- **Z1** SST / Passivated

Shell Size A B C D E F G H J K L M N

Entry Size

Entry Size	D	Shell Size
01	.140 (3.6)	A thru N
02	.290 (7.4)	B thru N
03	.440 (11.2)	C thru N
04	.540 (13.7)	D thru N
05	.690 (17.5)	E thru N
06	.810 (20.6)	F thru N
07	1.000 (25.4)	H thru N
08	1.190 (30.2)	H thru N
09	1.305 (33.1)	K thru N
10	1.420 (36.1)	K thru N
11	1.600 (40.6)	K and N
12	1.500 (38.1)	K thru N
13	1.750 (44.5)	N
14	1.875 (47.6)	N

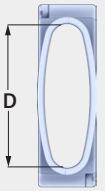

ENTRY SIZE

Band
- **N** No Band
- **M** Micro Band Included
- **J** Micro Slim Band Included
- **L** Micro-Max Band Included

Height Code

Code	H
-01	.810 (20.6)
-02	.940 (23.9)
-04	1.190 (30.2)
-06	1.440 (36.6)
-08	1.690 (42.9)

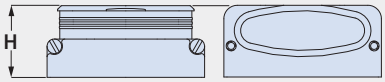

TOP ENTRY T SIDE ENTRY S

Shell Size	A Max in	A Max mm	B in	B mm	C Max in	C Max mm	Available Entries
A	.385	9.8	.270	6.9	.485	12.3	01
B	.385	9.8	.270	6.9	.635	16.1	01 thru 02
C	.385	9.8	.270	6.9	.785	19.9	01 thru 03
D	.385	9.8	.270	6.9	.885	22.5	01 thru 04
E	.385	9.8	.270	6.9	1.035	26.3	01 thru 05
F	.385	9.8	.270	6.9	1.185	30.1	01 thru 06
G	.465	11.8	.350	8.9	1.145	29.1	01 thru 06
H	.495	12.6	.380	9.7	1.525	38.7	01 thru 08
J	.385	9.8	.270	6.9	1.545	39.2	01 thru 08
K	.385	9.8	.270	6.9	1.945	49.4	01 thru 12
L	.495	12.6	.380	9.7	1.765	44.8	01 thru 10
M	.555	14.1	.440	11.2	1.830	46.5	01 thru 10, 12
N	.650	16.5	.535	13.6	2.200	55.9	01 thru 14

BAND OPTIONS

Terminate cable braid to backshell with optional band strap and banding tool. Pre-coiled bands are passivated stainless steel. Micro Slim bands have reduced thickness for weight reduction. Micro-Max bands are high-tension for lower-resistivity termination.

Band Type and Width	Hand Tool	Pneumatic Tool
Micro: .12 (3.0)	601-101	601-107
Micro Slim: .12 (3.0)	601-122	601-123
Micro-Max: .12 (3.0)	601-129	601-118

799-016

Piggyback EMI Banding Backshell, Panel Mount

- Solid, Elliptical Entry
- Band-Master® Shield Termination
- Top, Side and 45° Entry

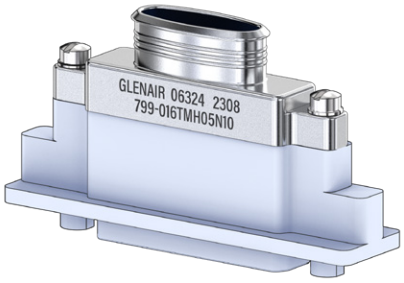

799-016

This accessory fits Series 790 and 791 panel mount connectors:
790-026, 790-027, 790-049, 790-050, 791-017, 791-018, 791-019, 791-020

EMI, lightweight. 799-016 piggyback backshell fits panel mount Series 790 and 791 connectors. Terminate cable shield to backshell with BandMaster ATS band strap. Aluminum or stainless steel with stainless steel screws. Non-environmental.

BAND OPTIONS

Terminate cable braid to backshell with optional band strap and banding tool. Pre-coiled bands are passivated stainless steel. Micro Slim bands have reduced thickness for weight reduction. Micro-Max bands are high-tension for lower-resistivity termination.

Band Type and Width	Hand Tool	Pneumatic Tool
Micro: .12 (3.0)	601-101	601-107
Micro Slim: .12 (3.0)	601-122	601-123
Micro-Max: .12 (3.0)	601-129	601-118

PART NUMBER

	799-016T	MT	L	07	N	12
Sample PN➜						

Base P/N

799-016T	T	Top Entry
799-016S	S	Side Entry
799-016E	E	45° Entry

Material / Finish

TZ	Alum / Tin-Zinc
M	Alum / Electroless Nickel
MT	Alum / Nickel-PTFE
ZR	Alum / Black Zinc-Nickel
Z1	SST / Passivated

Shell Size

A B C D E F G H J K L M N

Entry Size

Entry Size	E	Shell Size
01	.255 (6.5)	A thru N
02	.405 (10.3)	B thru N
03	.555 (14.1)	C thru N
04	.655 (16.6)	D thru N
05	.805 (20.4)	E thru N
06	.920 (23.4)	F thru N
07	1.110 (28.2)	H thru N
08	1.300 (33.0)	H thru N
09	1.415 (35.9)	K thru N
10	1.535 (39.0)	K thru N
11	1.705 (43.3)	K and N
12	1.600 (40.6)	K, M, N
13	2.000 (50.8)	N

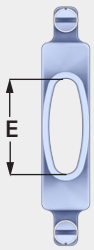

ENTRY SIZE

Band

N	No Band
M	Micro Band Included
J	Micro Slim Band Included
L	Micro-Max Band Included

Height Code

		Shell Size		
Code	Height	T Top	E 45°	S Side
05	.313 (8.0)	—	—	A-F, J, K
08	.500 (12.7)	—	—	A thru M
10	.625 (15.9)	A thru L	—	A thru N
12	.750 (19.1)	A thru N	A-F, J, K	A thru N
14	.875 (22.2)	A thru N	A thru M	G, H, L, M, N
16	1.000 (25.4)	A thru N	A thru N	G, H, L, M, N
18	1.125 (28.6)	A thru N	G, H, L, M, N	M, N
20	1.250 (31.8)	G, H, L, M, N	G, H, L, M, N	M, N

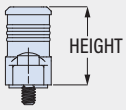

T TOP ENTRY

S SIDE ENTRY

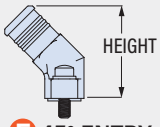

E 45° ENTRY

© 2024 Glenair, Inc • 1211 Air Way, Glendale, CA 91201 • 818-247-6000 • www.glenair.com • U.S. CAGE code 06324 • Rectangular Accessories
Dimensions in Inches (millimeters) are subject to change without notice.

799-016

Piggyback EMI Banding Backshell, Panel Mount

- Solid, Elliptical Entry
- Band-Master® Shield Termination
- Top, Side and 45° Entry

T Top Entry

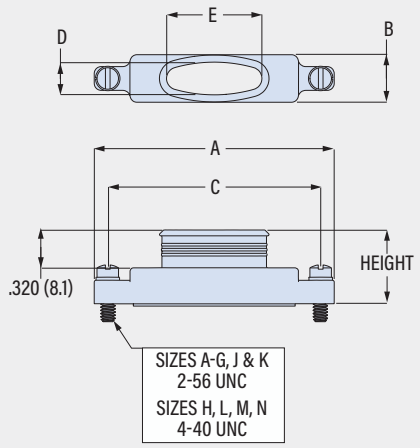

E 45°Entry

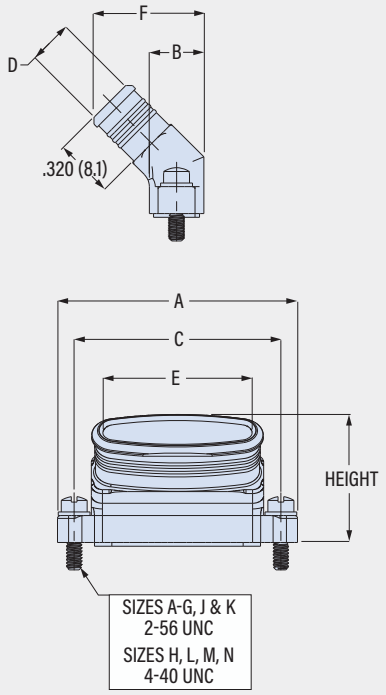

S Side Entry

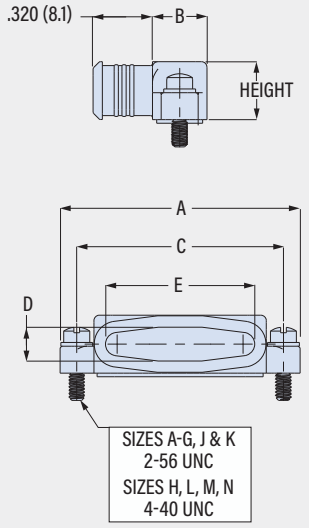

Shell Size	A Max in	A Max mm	B Max in	B Max mm	C in	C mm	D in	D mm	F in	F mm	Available Entries
A	.760	19.3	.308	7.8	.565	14.4	.190	4.8	.59	15.0	01
B	.910	23.1	.308	7.8	.715	18.2	.190	4.8	.59	15.0	01 thru 02
C	1.060	26.9	.308	7.8	.865	22.0	.190	4.8	.59	15.0	01 thru 03
D	1.160	29.5	.308	7.8	.965	24.5	.190	4.8	.59	15.0	01 thru 04
E	1.310	33.3	.308	7.8	1.115	28.3	.190	4.8	.59	15.0	01 thru 05
F	1.460	37.1	.308	7.8	1.265	32.1	.190	4.8	.59	15.0	01 thru 06
G	1.410	35.8	.395	10.0	1.215	30.9	.275	7.0	.68	17.3	01 thru 06
H	2.045	51.9	.410	10.4	1.800	45.7	.300	7.6	.70	17.8	01 thru 08
J	1.810	46.0	.308	7.8	1.615	41.0	.190	4.8	.59	15.0	01 thru 08
K	2.210	56.1	.308	7.8	2.015	51.2	.190	4.8	.59	15.0	01 thru 12
L	2.281	57.9	.410	10.4	2.036	51.7	.300	7.6	.70	17.8	01 thru 10
M	2.445	62.1	.470	11.9	2.200	55.9	.360	9.1	.76	19.3	01 thru 10, 12
N	2.645	67.2	.534	13.6	2.350	59.7	.425	10.8	.83	21.1	01 thru 13

Entry Size	E in	E mm	Available Sizes
01	.255	6.5	A thru N
02	.405	10.3	B thru N
03	.555	14.1	C thru N
04	.655	16.6	D thru N
05	.805	20.4	E thru N
06	.920	23.4	F thru N
07	1.110	28.2	H thru N
08	1.300	33.0	H thru N
09	1.415	35.9	K thru N
10	1.535	39.0	K thru N
11	1.705	43.3	K and N
12	1.600	40.6	K, M, N
13	2.000	50.8	N

© 2024 Glenair, Inc • 1211 Air Way, Glendale, CA 91201 • 818-247-6000 • www.glenair.com • U.S. CAGE code 06324 • Rectangular Accessories
Dimensions in Inches (millimeters) are subject to change without notice.

799-131

Piggyback EMI Banding Backshell, Dual Port

- Piggyback Dual Round Entry
- Band-Master® Shield Termination
- Top and Side Entry

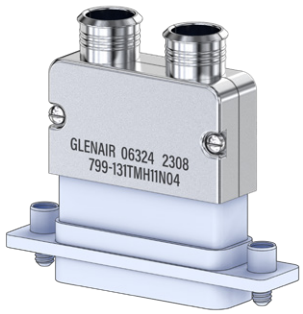

799-131

This accessory fits Series 790 and 791 connectors:
790-024 , 790-025, 791-001, 791-003

EMI, lightweight, split. 799-131 piggyback backshell fits Series 790 and 791 connectors with rear groove on shell. Dual port banding. Terminate cable shield to backshell with BandMaster ATS band strap. Aluminum with stainless steel screws. Non-environmental.

T
TOP ENTRY

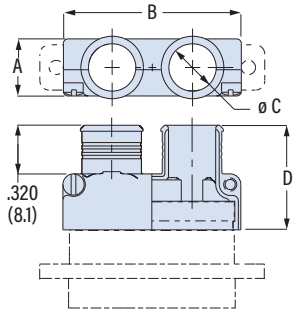

S
SIDE ENTRY

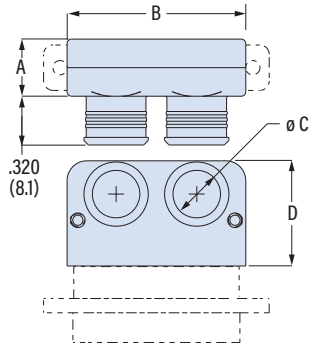

PART NUMBER

Sample PN➜ **799-131T M H 09 N -01**

Base P/N

799-131T	T	Top Entry
799-131S	S	Side Entry

Material / Finish

TZ	Alum / Tin-Zinc
M	Alum / Electroless Nickel
MT	Alum / Nickel-PTFE
ZR	Alum / Black Zinc-Nickel
Z1	SST / Passivated

Shell Size

C D E F G H J K L M

Entry Size

Entry Size	C	Shell Size
35	.109 (2.8)	C thru M
04	.125 (3.2)	D thru M
05	.156 (4.0)	D thru M
06	.188 (4.8)	E thru M
07	.219 (5.6)	E thru M
08	.250 (6.4)	F thru M
09	.281 (7.1)	F thru M
10	.312 (7.9)	F, H thru M
11	.344 (8.7)	H, L, M
12	.375 (9.5)	H, L, M
13	.406 (10.3)	H, L, M
14	.438 (11.1)	M
15	.469 (11.9)	M

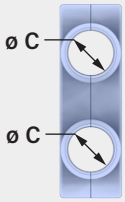

ENTRY SIZE

Band

N	No Band
M	Micro Band Included
J	Micro Slim Band Included
L	Micro-Max Band Included

Height Code

Code	D
-01	.810 (20.6)
-02	.940 (23.9)
-04	1.190 (30.2)
-06	1.440 (36.6)
-08	1.690 (42.9)

TOP ENTRY T

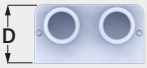

SIDE ENTRY S

Shell Size	A Max in	A Max mm	B Max in	B Max mm	Available Entries
C	.385	9.8	.785	19.9	35
D	.385	9.8	.885	22.5	35, 04, 05
E	.385	9.8	1.035	26.3	35, 04 thru 07
F	.385	9.8	1.185	30.1	35, 04 thru 10
G	.465	11.8	1.145	29.1	35, 04 thru 09
H	.495	12.6	1.525	38.7	35, 04 thru 10
J	.385	9.8	1.545	39.2	35, 04 thru 10
K	.385	9.8	1.945	49.4	35, 04 thru 10
L	.495	12.6	1.765	44.8	35, 04 thru 13
M	.555	14.1	1.830	46.5	35, 04 thru 15

BAND OPTIONS

Terminate cable braid to backshell with optional band strap and banding tool. Pre-coiled bands are passivated stainless steel. Micro Slim bands have reduced thickness for weight reduction. Micro-Max bands are high-tension for lower-resistivity termination.

Band Type and Width	Hand Tool	Pneumatic Tool
Micro: .12 (3.0)	601-101	601-107
Micro Slim: .12 (3.0)	601-122	601-123
Micro-Max: .12 (3.0)	601-129	601-118

© 2024 Glenair, Inc • 1211 Air Way, Glendale, CA 91201 • 818-247-6000 • www.glenair.com • U.S. CAGE code 06324 • Rectangular Accessories
Dimensions in Inches (millimeters) are subject to change without notice.

799-164

Piggyback EMI Banding Backshell, Series 792

- Split Piggyback for Series 792
- Band-Master® Shield Termination
- For High-Speed Data Cables

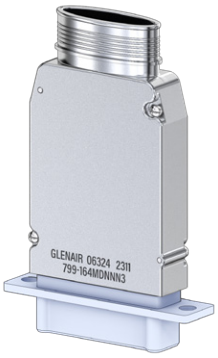

799-164

This accessory fits Series 792 connectors with twinax, quadrax or El Ochito contacts:
792-001 , 792-002

EMI, piggyback, split. 799-164 piggyback backshell fits Series 792 connectors with rear groove on shell. Backshell has internal fluorosilicone wire strain relief grommet. Grommet has three hole sizes to accommodate twinax, quadrax or octaxial high speed cables. Available with Qwik-Ty strain relief arm or slots for lacing tape. Terminate cable shield to backshell with BandMaster ATS band strap. Aluminum with stainless steel screws. Non-environmental.

799-164 INTERNAL VIEW

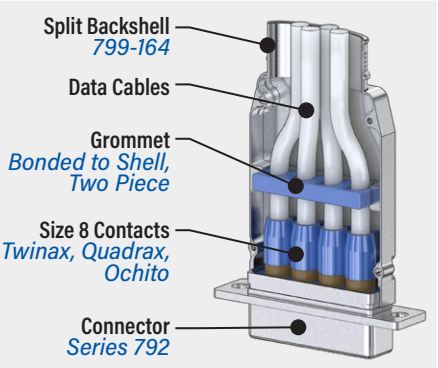

Shell Size	A Max in	A Max mm	B Max in	B Max mm	Height	
A	.575	14.6	.810	20.6	2.380	60.5
B	.575	14.6	1.185	30.1	2.500	63.5
C	.575	14.6	1.560	39.6	2.940	74.7
D	.575	14.6	1.935	49.1	3.120	79.2
E	.575	14.6	2.310	58.7	3.310	84.1
F	.950	24.1	2.310	58.7	3.380	85.9

PART NUMBER

Sample PN➔ **799-164 M D N N N 2**

Base P/N	799-164	
Material / Finish	TZ	Alum / Tin-Zinc
	M	Alum / Electroless Nickel
	MT	Alum / Nickel-PTFE
	ZR	Alum / Black Zinc-Nickel
Shell Size	A B C D E F	
Band	N	No Band
	B	Standard Band Incl.
	S	Slim Std. Band Incl.
	M	Micro Band Included
	J	Micro Slim Band Included
	L	Micro-Max Band Included
Qwik-Ty	T	Qwik-Ty Strain Relief Arm
	N	No Qwik-Ty
Lace-Tie Option	H	Holes for Lace-Tie
	S	Slots for Lace-Tie
	N	No Lace-Tie Provision
Cable Size	1	.188 (4.8) Max. Individual Cable Diameter
	2	.250 (6.4) Max. Individual Cable Diameter
	3	.313 (8.0) Max. Individual Cable Diameter

Holes *Slots*

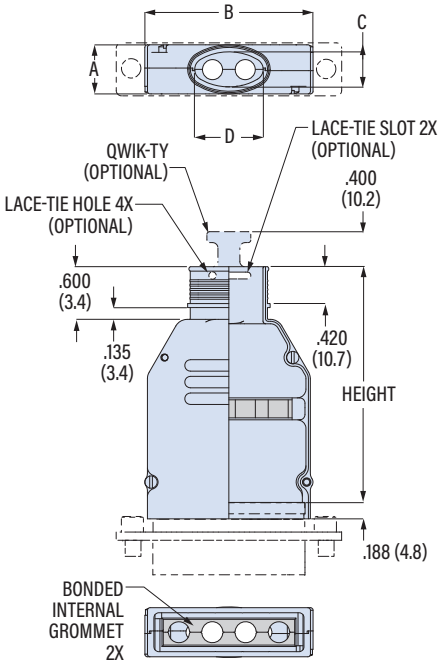

Band Type and Width	Hand Tool	Pneumatic
Standard: .24 (6.1)	601-100	601-106
Slim Standard: .24 (6.1)	601-109	601-110
Micro: .12 (3.0)	601-101	601-107
Micro Slim: .12 (3.0)	601-122	601-123
Micro-Max: .12 (3.0)	601-129	601-118

ENTRY SIZE 1

Shell Size	C in	C mm	D in	D mm
A	.200	5.1	.300	7.6
B	.250	6.4	.390	9.9
C	.400	10.2	.440	11.2
D	.400	10.2	.520	13.2
E	.400	10.2	.690	17.5
F	.700	17.8	.700	17.8

ENTRY SIZE 2

Shell Size	C in	C mm	D in	D mm
A	.260	6.6	.360	9.1
B	.340	8.6	.510	13.0
C	.400	10.2	.740	18.8
D	.400	10.2	.960	24.4
E	.400	10.2	1.170	29.7
F	.775	19.7	.775	19.7

ENTRY SIZE 3

Shell Size	C in	C mm	D in	D mm
A	.320	8.1	.420	10.7
B	.380	9.7	.630	16.0
C	.400	10.2	.940	23.9
D	.400	10.2	1.250	31.8
E	.400	10.2	1.550	39.4
F	.775	19.7	1.650	41.9

© 2024 Glenair, Inc • 1211 Air Way, Glendale, CA 91201 • 818-247-6000 • www.glenair.com • U.S. CAGE code 06324 • Rectangular Accessories
Dimensions in Inches (millimeters) are subject to change without notice.

AVIATION-GRADE
ARINC 600
STRAIN-RELIEF
AND EMI BANDING
BACKSHELLS

ARINC 600 and M83527 Backshells for Industry-Standard Modular Rack-and-Panel Connectors

Glenair makes EMI/RFI filtered connector versions of the ARINC 600 series

ARINC 600 connectors, prevalent in commercial aviation, are modular, high-density interconnects designed for rack-and-panel avionic applications. These connectors feature a modular rectangular design with a highly-ruggedized shell, ensuring life-of-system durability and resistance to shock and vibration. ARINC 600 connectors support standard data bus as well as high-speed data, with insert modules for signal, power, and Ethernet within a single unit. Their modular design allows for easy installation and maintenance, making them a popular choice for avionics systems, communication equipment, and other aerospace applications.

Glenair Signature ARINC 600 Backshells

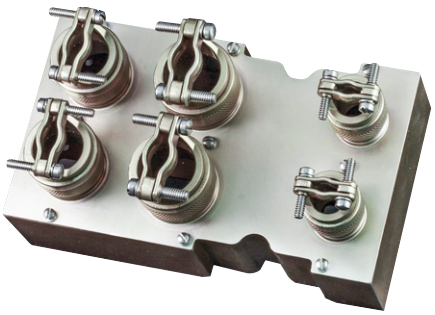

527-126

This strain-relief backshell fits ARINC 600 Size 3 connectors.

The 527-126 is a heavy-duty strain relief device designed to protect the large volume of wire terminations servicing a typical ARINC 600 size 3 connector.

ARINC 600/ M83527 Backshell Selection Guide

ARINC 600 Size 1 Backshells

Strain Relief + Braid Sock
527-257
Page D-3

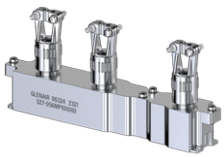

EMI Cone-and-Ring
527-056
Page D-5

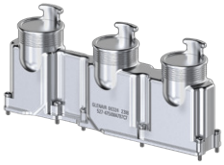

EMI Banding Composite
527-475
Page D-6

ARINC 600 Size 2 Backshells

Strain Relief
527-149
Page D-7

EMI Cone-and-Ring
527-025
Page D-8

EMI TAG Ring®
527-071
Page D-9

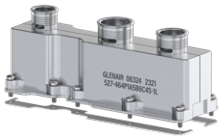

EMI Banding Composite
527-464
Page D-10

ARINC 600 Size 3 Backshells

Strain Relief
527-126
Page D-11

EMI TAG Ring®
527-199
Page D-12

EMI Banding
527-216
Page D-13

MIL-DTL-83527 Backshells

M25, M28 Threads
527-114
Page D-14

EMI Banding
527-543
Page D-15

© 2024 Glenair, Inc • 1211 Air Way, Glendale, CA 91201 • 818-247-6000 • www.glenair.com • U.S. CAGE code 06324 • Rectangular Accessories
Dimensions in Inches (millimeters) are subject to change without notice.

Band-Master ATS®

Shield Termination Bands and Tools

Band-Master ATS®

Terminate cable braid shield to adapter with stainless steel ***Band-Master ATS®*** bands. Install band with hand tool or bench-mounted pneumatic tool. Bands are available in ***Standard*** (.24 inch) and ***Micro*** (.12 inch) widths. ***Slim Standard*** and ***Micro Slim*** bands have reduced thickness for weight reduction. Hardened steel ***Micro-Max*** bands have 60% more tensile strength than standard Micro bands. Available pre-coiled, bands are 304 series stainless steel, passivated.

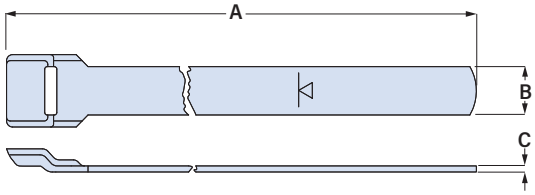

For more information on the Band-Master ATS EMI shield termination system, including instruction manuals and calibration details:
https://www.glenair.com/bandmaster/

Band and Band Tool Part Numbers

Size		A Length in	A Length mm	Fits up to Dia. in	Fits up to Dia. mm	B Width in	B Width mm	C Thickness in	C Thickness mm	Part Number Pre-coiled	Hand Tool Part Number
Standard		9	228	1.00	25.4	.24	6.1	.02	0.5	601-006	601-100
		14	355	1.80	45.7	.24	6.1	.02	0.5	601-041	
		18	457.	2.50	63.5	.24	6.1	.02	0.5	601-050	
Slim Standard		9	228	.94	23.9	.24	6.1	.01	0.3	601-571	601-109
		14	355	1.80	45.7	.24	6.1	.01	0.3	601-573	
Micro		5	127	.50	12.7	.12	3.0	.015	0.4	601-025	601-101
		8	203	.88	22.4	.12	3.0	.015	0.4	601-061	
		14	356	1.88	47.7	.12	3.0	.015	0.4	601-065	
Micro Slim		8	203	.88	22.4	.12	3.0	.01	0.3	601-601	601-122
		14	356	1.88	47.7	.12	3.0	.01	0.3	601-603	
Micro-Max		8	203	.88	22.4	.12	3.0	.015	0.4	601-701	601-129
		14	356	1.88	47.7	.12	3.0	.015	0.4	601-703	

© 2024 Glenair, Inc • 1211 Air Way, Glendale, CA 91201 • 818-247-6000 • www.glenair.com • U.S. CAGE code 06324 • Rectangular Accessories
Dimensions in Inches (millimeters) are subject to change without notice.

527-257

ARINC 600 Size 1 Backshell, Strain Relief

- Self-Locking Saddle Clamp
- EMI Braidsock Option

527-257

This strain-relief backshell fits ARINC 600 Size 1 connectors.

Two clamp types: saddle clamp for unshielded wire bundles or saddle clamp with nickel-plated copper braid sock for shielding applications. Backshell ports feature Adapter Code H (D38999 Series III/IV) interface. Composite clamps are flight-grade self-locking style with full-radius saddles.

TABLE 1 CONNECTOR CODE

P	All Manufacturers (*unless listed below*) Due to non-standard connector modifications this backshell may require design alterations to fit properly. Consult factory to ensure a proper fit. *Remove and discard insert retainer plate*
P1	ITT Cannon BKAD****322 Plug *Remove and discard insert retainer plate*
P2	ITT Cannon/Radiall Environmental Plug *Attach backshell to insert retainer plate*
P3	ITT Cannon / Boeing BACC66 Plug *Remove and discard insert retainer plate*
P5	Radiall / Boeing BACC66 Plug *Remove and discard insert retainer plate*
P6	ITT Cannon BKAC & BKAE****322 Envir. Plug *Attach backshell to insert retainer plate*

PORT LOCATIONS

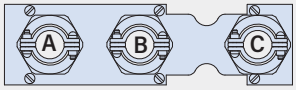

PART NUMBER

Sample PN➜ **527-257 M P1 A1 5 B1 4 C1 3**

Base P/N	527-257	
Finish	M	Electroless Nickel
	MT	Nickel-PTFE
	TZ	Tin-Zinc
	NF	Olive Drab Cadmium
Connector Code	P P1 P2 P3 P5 P6	*See Table 1*
Port A – Clamp Type	A1	Saddle Clamp
	A2	Saddle Clamp with EMI Braid Sock
	A—	Accessory Thread *(no clamp)*
Port A – Size	1 2 3 4 5 6 7	*See Table 2*
Port B – Clamp Type	B1	Saddle Clamp
	B2	Saddle Clamp with EMI Braid Sock
	B—	Accessory Thread *(no clamp)*
Port B – Size	1 2 3 4 5 6 7	*See Table 2*
Port C – Clamp Type	C1	Saddle Clamp
	C2	Saddle Clamp with EMI Braid Sock
	C—	Accessory Thread *(no clamp)*
Port C – Size	1 2 3 4 5 6 7	*See Table 2*

CLAMP STYLE A1, B1 *(620HS042)*

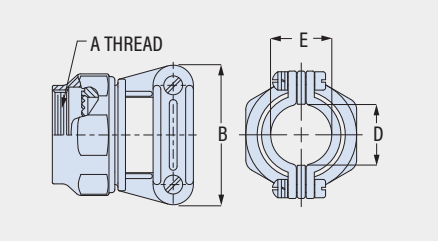

CLAMP STYLE A2, B2 *(447HS557)*

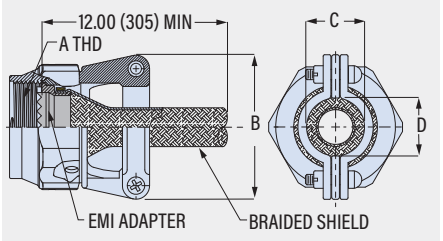

TABLE 2 CLAMP SIZE

Size Code	A Thread X1.0	B Max in	B Max mm	C ± .031(0.8) in	C ± .031(0.8) mm	D Min in	D Min mm	E ± .031(0.8) in	E ± .031(0.8) mm
1	M12	.98	24.9	.265	6.7	.22	5.6	.219	5.6
2	M15	1.05	26.7	.310	7.9	.27	6.9	.264	6.7
3	M18	1.20	30.5	.390	9.9	.35	8.9	.344	8.7
4	M22	1.30	33.0	.506	12.9	.47	11.9	.460	11.7
5	M25	1.44	36.6	.591	15.0	.55	14.0	.545	13.8
6	M28	1.56	39.6	.661	16.8	.62	15.7	.615	15.6
7	M31	1.69	42.9	.744	18.9	.70	17.8	.698	17.7

527-257

ARINC 600 Size 1 Backshell, Strain Relief

- Self-Locking Saddle Clamp
- EMI Braidsock

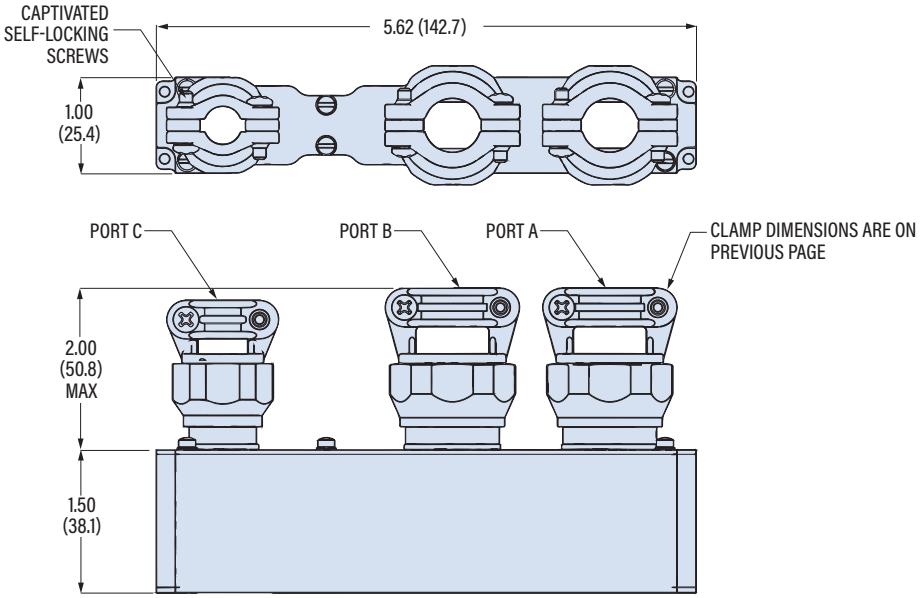

MATERIAL/ FINISH

Shell, lid, ports: aluminum
Style 1 Clamp: polyetherimide (PEI) ,natural tan color
Style 2 Clamp: polyetherimide (PEI). Body is natural tan color, coupling nut and saddles are black. EMI adapter: brass, plated per finish code. Crimp ring: copper/tin. Braid: 34 AWG nickel-coated copper, type AA59569R34N
Screws, washers: stainless steel/passivated
Clinch nuts: stainless steel/silver
Anti-decoupling spring: thermoplastic

© 2024 Glenair, Inc • 1211 Air Way, Glendale, CA 91201 • 818-247-6000 • www.glenair.com • U.S. CAGE code 06324 • Rectangular Accessories
Dimensions in Inches (millimeters) are subject to change without notice.

527-056

ARINC 600 Size 1 Backshell, EMI

- Cone-and-Ring Shield Termination
- Saddle Clamp Strain Relief

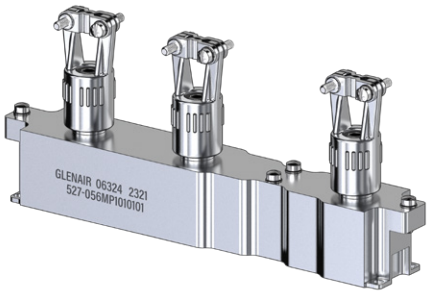

527-056

This EMI backshell fits ARINC 600 Size 1 connectors.

Backshell ports feature saddle clamp strain reliefs with cone-and-ring cable shield termination. Backshell attaches to connector insert retainer plate threaded holes. Stainless steel hardware.

CONE-AND-RING

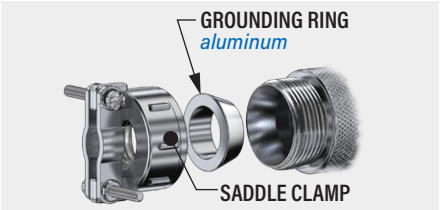

TABLE 1 CONNECTOR CODE

P	All Manufacturers (*unless listed below*) Due to non-standard connector modifications this backshell may require design alterations to fit properly. Consult factory to ensure a proper fit. *Remove and discard insert retainer plates*
P1	ITT Cannon BKAD****322 Plug *Remove and discard insert retainer plate*
P2	ITT Cannon/Radiall Environmental Plug *Attach backshell to insert retainer plate*
P3	ITT Cannon / Boeing BACC66 Plug *Remove and discard insert retainer plate*
P5	Radiall / Boeing BACC66 Plug *Remove and discard insert retainer plate*
P6	ITT Cannon BKAC & BKAE****322 Envir. Plug *Attach backshell to insert retainer plate*

TABLE 2 ENTRY SIZE

Entry Size	Cable Range Min in	Cable Range Min mm	Cable Range Max in	Cable Range Max mm	M in	M mm
01	.062	1.6	.125	3.2	.781	19.8
02	.125	3.2	.250	6.4	.968	24.6
03	.250	6.4	.375	9.5	1.046	26.6
04	.312	7.9	.500	12.7	1.156	29.4
05	.375	9.5	.625	15.9	1.218	30.9

PART NUMBER

Sample PN➜ **527-056 M P1 03 04 03 A**

Base P/N	**527-056**	
Finish	**M**	Electroless Nickel
	MT	Nickel-PTFE
	TZ	Tin-Zinc
	NF	Olive Drab Cadmium
Connector Code	**P P1 P2 P3 P5 P6**	*See Table 1*
Port 1 Entry Size	**00**	Port 1 Deleted
	01 02 03 04 05	*See Table 2*
Port 2 Entry Size	**00**	Port 2 Deleted
	01 02 03 04 05	*See Table 2*
Port 3 Entry Size	**00**	Port 3 Deleted
	01 02 03 04 05	*See Table 2*
Height	**A**	1.00 (25.4)
	B	1.25 (31.8)

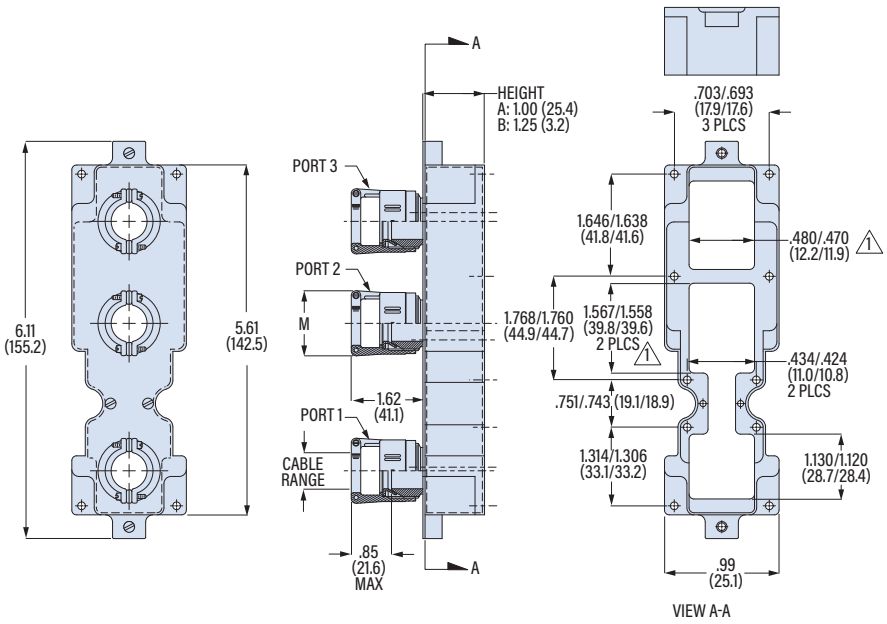

1 DIMENSIONS APPLY TO CONNECTOR DESIGNATOR "P"

527-475

ARINC 600 Size 1 Backshell, EMI Banding Composite

- Lightweight Composite
- Banding Shield Termination
- Qwik-Ty Strain Relief

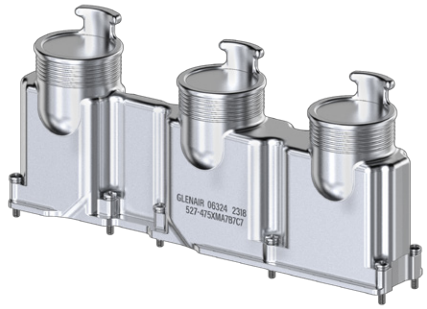

527-475

This composite EMI backshell fits ARINC 600 Size 1 connectors.

Terminate cable braid shields to backshell with Band-Master ATS banding straps. Backshell attaches to connector insert retainer plate threaded holes (see Connector Compatibility note). Thermoplastic with stainless steel hardware.

CONNECTOR COMPATIBILITY

Connector Designator P6

Remove insert retainer plate from connector. Attach backshell to connector plate threaded holes.

TABLE 1 ENTRY SIZE

Entry Size	Entry Diameter in	Entry Diameter mm	L in	L mm	M Max in	M Max mm
2	.25	6.4	.22	5.6	.475	12.1
3	.38	9.7	.28	7.1	.605	15.4
4	.50	12.7	.33	8.4	.725	18.4
5	.63	16.0	.42	10.7	.855	21.7
6	.75	19.1	.50	12.7	.975	24.8
7	.87	22.1	.60	15.2	1.095	27.8

BAND OPTIONS

Terminate cable braid to backshell with optional band strap and banding tool. Pre-coiled bands are passivated stainless steel. Slim Standard bands have reduced thickness for weight reduction.

Band Type and Width	Hand Tool	Pneumatic Tool
Standard: .24 (6.1)	601-100	601-106
Slim Standard: .24 (6.1)	601-109	601-110

PART NUMBER

Sample PN➜ **527-475 XM A5 B4 C3 S J**

Base P/N	527-475	
Finish	XM	Electroless Nickel
	XW	Olive Drab Cadmium
Connector Code	*Omit*	All Connectors except:
	P6	ITT Cannon BKAC & BKAE Envir. Plug
Port A Entry Size	A2 A3 A4 A5 A6 A7	*See Table 1*
Port B Entry Size	B2 B3 B4 B5 B6 B7	*See Table 1*
Port C Entry Size	C2 C3 C4 C5 C6 C7	*See Table 1*
Slots	*Omit*	No Slots
	S	Slots
EMI Gasket	*Omit*	No Gasket
	1	Gasket Included (Qty 2)
Qwik-Ty	*Omit*	Qwik-Ty Strain Relief Arm Included
	L	Less Qwik-Ty Arm
Band	*Omit*	No Band
	B	Standard Bands Included
	J	Slim Standard Bands Included

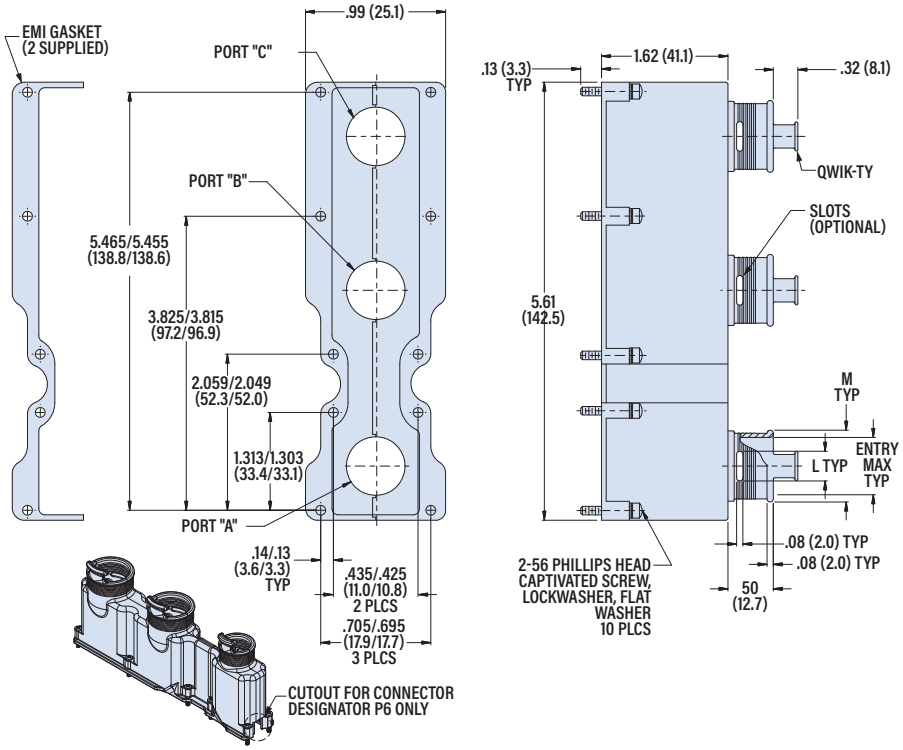

© 2024 Glenair, Inc • 1211 Air Way, Glendale, CA 91201 • 818-247-6000 • www.glenair.com • U.S. CAGE code 06324 • Rectangular Accessories
Dimensions in Inches (millimeters) are subject to change without notice.

527-149

ARINC 600 Size 2 Backshell, Strain Relief

- Saddle Clamp Strain Relief
- For Unshielded Cables

527-149

This strain-relief backshell fits ARINC 600 Size 2 connectors.

Saddle clamps have adapter code H metric thread interface (*ref. 620HS011*). Backshell attaches to connector insert retainer plate threaded holes using 4-40 screws supplied with backshell. Stainless steel hardware.

TABLE 1 CONNECTOR CODE

P	All Manufacturers (*unless listed below*) Due to non-standard connector modifications this backshell may require design alterations to fit properly. Consult factory to ensure a proper fit. *Remove and discard insert retainer plates*
P1	ITT Cannon BKAD****322 Plug *Remove and discard insert retainer plate*
P2	ITT Cannon/Radiall Environmental Plug *Attach backshell to insert retainer plate*
P3	ITT Cannon / Boeing BACC66 Plug *Remove and discard insert retainer plate*
P5	Radiall / Boeing BACC66 Plug *Remove and discard insert retainer plate*
P6	ITT Cannon BKAC & BKAE****322 Envir. Plug *Attach backshell to insert retainer plate*

TABLE 2 ENTRY SIZE

Entry Size	Thread Size X1.0	A In	A mm	Cable Range Min In	Cable Range Min mm	Cable Range Max In	Cable Range Max mm
1	M12	.800	20.3	.098	2.5	.234	5.9
2	M15	.820	20.8	.153	3.9	.234	5.9
3	M18	.870	22.1	.190	4.8	.328	8.3
4	M22	.840	21.3	.260	6.6	.457	11.6
5	M25	.910	23.1	.283	7.2	.614	15.6
6	M28	1.000	25.4	.325	8.3	.634	16.1
7	M31	1.030	26.2	.343	8.7	.698	17.7
8	M34	1.160	29.5	.381	9.7	.823	20.9
9	M37	1.190	30.2	.418	10.6	.853	21.7

PART NUMBER

Sample PN➜ **527-149 M P A4 B7 C05 E**

Base P/N	**527-149**
Finish	**M** Electroless Nickel **MT** Nickel-PTFE **TZ** Tin-Zinc **NF** Olive Drab Cadmium
Connector Code	**P P1 P2 P3 P5 P6** *See Table 1*
Port A Entry Size	***Omit*** Port A Deleted **A1 A2 A3 A4 A5 A6 A7 A8 A9** *See Table 1* *For threaded port (no clamp), add "L" prefix (E.g:"LA4")*
Port B Entry Size	***Omit*** Port B Deleted **B1 B2 B3 B4 B5 B6 B7 B8 B9** *See Table 1* *For threaded port (no clamp), add "L" prefix (E.g:"LB6")*
Port C Entry Size	***Omit*** Port C Deleted **C1 C2 C3 C4 C5 C6 C7 C8 C9** *See Table 1* *For threaded port (no clamp), add "L" prefix (E.g:"LC8")*
Height	***Omit*** 1.50 (38.1) **E** 2.00 (50.8) **F** 2.50 (63.5)

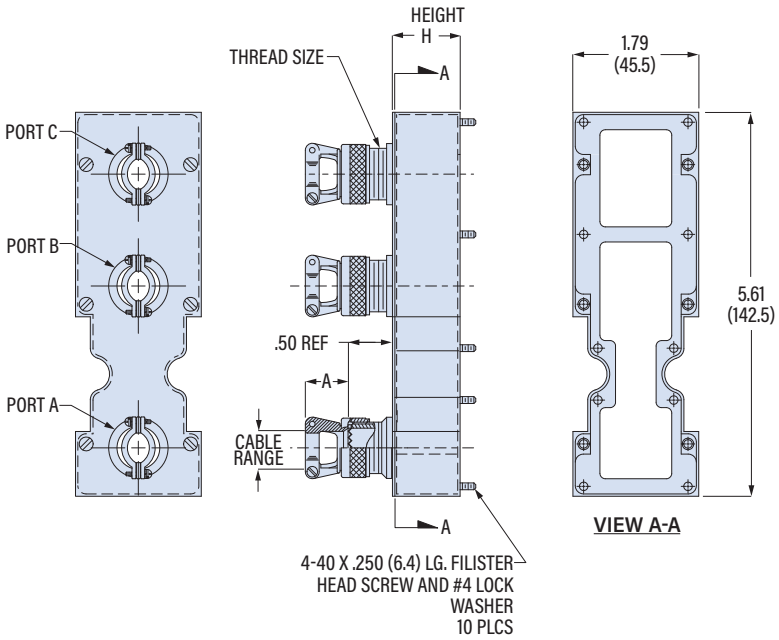

527-025

ARINC 600 Size 2 Backshell, EMI

- Cone-and-Ring Shield Termination
- Saddle Clamp Strain Relief
- For Shielded Cables

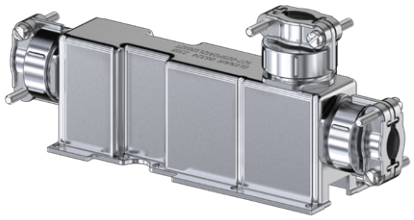

527-025

This EMI backshell fits ARINC 600 Size 2 connectors.

Cone-and-Ring shield termination backshell attaches to connector insert retainer plate threaded holes. Stainless steel hardware.

TABLE 1 CONNECTOR CODE

P	All Manufacturers (*unless listed below*) Due to non-standard connector modifications this backshell may require design alterations to fit properly. Consult factory to ensure a proper fit. *Remove and discard insert retainer plates*
P1	ITT Cannon BKAD****322 Plug *Remove and discard insert retainer plate*
P2	ITT Cannon/Radiall Environmental Plug *Attach backshell to insert retainer plate*
P3	ITT Cannon / Boeing BACC66 Plug *Remove and discard insert retainer plate*
P5	Radiall / Boeing BACC66 Plug *Remove and discard insert retainer plate*
P6	ITT Cannon BKAC & BKAE****322 Envir. Plug *Attach backshell to insert retainer plate*

TABLE 2 ENTRY SIZE

Entry Size	Cable Range Min	Cable Range Max	A Max	B Max
03	.157 (4.0)	.250 (6.4)	.760 (19.3)	.844 (21.4)
04	.187 (4.7)	.312 (7.9)	.760 (19.3)	.906 (23.0)
06	.281 (7.1)	.437 (11.1)	.760 (19.3)	1.093 (27.8)
08	.344 (8.7)	.562 (14.3)	.760 (19.3)	1.187 (30.1)
10	.375 (9.5)	.625 (15.9)	.760 (19.3)	1.281 (32.5)
12	.438 (11.1)	.750 (19.1)	.760 (19.3)	1.500 (38.1)
16	.562 (14.3)	.938 (23.8)	1.073 (27.3)	1.719 (43.7)

PART NUMBER

Sample PN➜ **527-025 M P1 H06 J04 K06 D S**

Base P/N	527-025	
Finish	M	Electroless Nickel
	MT	Nickel-PTFE
	TZ	Tin-Zinc
	NF	Olive Drab Cadmium
Connector Code	P P1 P2 P3 P5 P6	*See Table 1*
Port 1 Location	A B C D E F G H J K L	*See Drawing*
Port 1 Entry Size	03 04 06 08 10 12 16	*See Table 2*
Port 2 Location	A B C D E F G H J K L	*See Drawing*
Port 2 Entry Size	03 04 06 08 10 12 16	*See Table 2*
Port 3 Location	A B C D E F G H J K L	*See Drawing*
Port 3 Entry Size	03 04 06 08 10 12 16	*See Table 2*
Termination Style	D	Two Ground Rings in Saddle Clamps
	MT	Three Ground Rings in Saddle Clamps
Safety Wire Holes	*Omit*	No Safety Wire Holes in Hex Nuts
	S	Hex Nuts with Safety Wire Holes

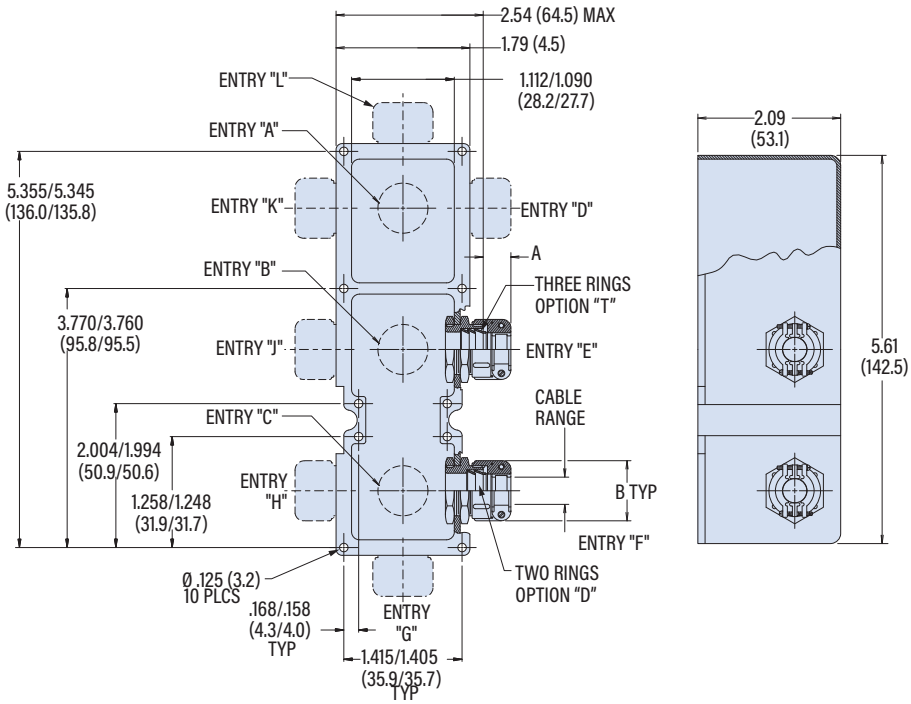

© 2024 Glenair, Inc • 1211 Air Way, Glendale, CA 91201 • 818-247-6000 • www.glenair.com • U.S. CAGE code 06324 • Rectangular Accessories
Dimensions in Inches (millimeters) are subject to change without notice.

527-071

ARINC 600 Size 2 Backshell, EMI, TAG Ring®

■ TAG Ring for Individual Braid Shields

-01
Single Port Module for Cavity C

-02
2 Port Module for Cavities A and B

527-071

This EMI backshell fits ARINC 600 Size 2 connectors.

Backshell consists of two modules ordered separately: single port module for cavity C, and dual port module for cavities A and B. TAG® ring has fingers for individual braid shields. Optional RFI gasket. Aluminum shell, nut and clamp. PTFE friction washer, gold plated beryllium copper ground spring, stainless steel screws and washers. Optional RFI gasket is aluminum mesh in neoprene.

TAG® RING

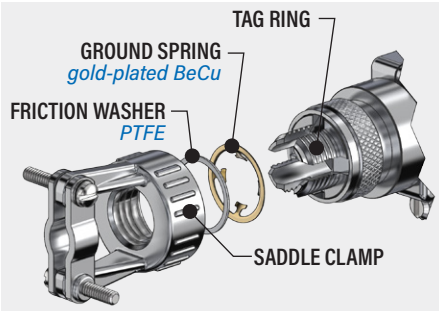

PART NUMBER

	Sample PN➜	527-071	-02	R	L
Base P/N	**527-071**				
Module	**-01** Single Port Module for Cavity C **-02** Dual Port Module for Cavities A and B				
RFI Gasket	***Omit*** No Gasket **R** RFI Gasket included				
Strain Relief	***Omit*** Nut *(requires shrink boot for strain relief)* **L** Saddle Clamp				

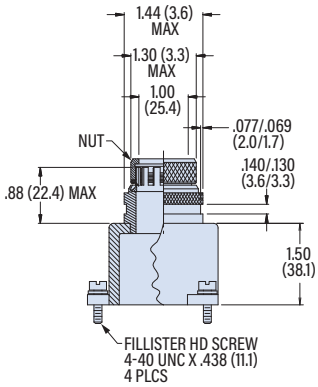

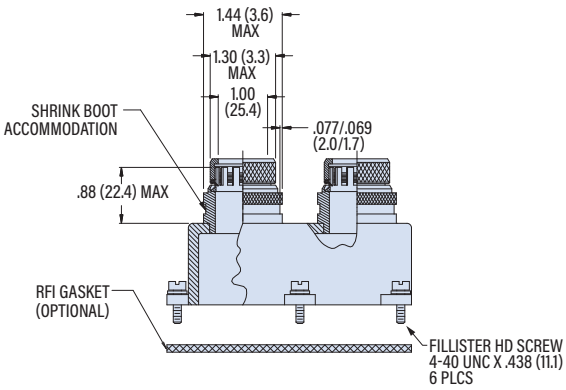

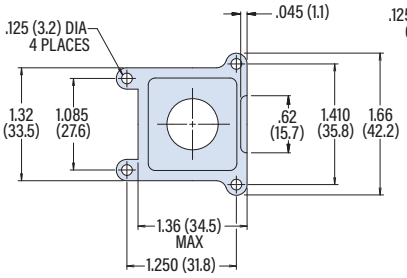

-01
SINGLE PORT MODULE FOR CAVITY C

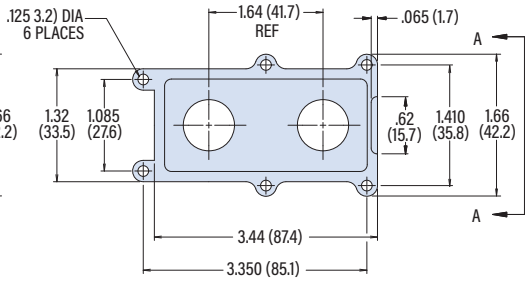

-02
DUAL PORT MODULE FOR CAVITIES A AND B

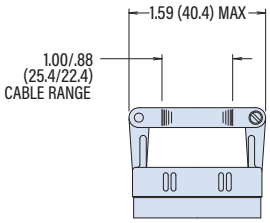

STYLE L
SADDLE CLAMP

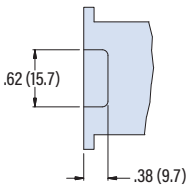

VIEW A-A

527-464

ARINC 600 Size 2 Backshell, EMI Banding

- Composite or Aluminum
- Band-Master ATS® Shield Termination

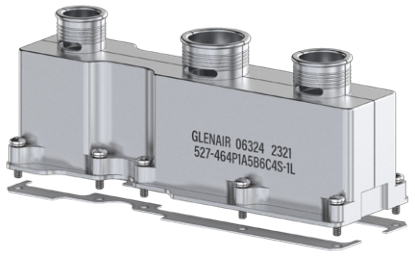

527-464

This EMI backshell fits ARINC 600 Size 2 connectors.

Backshell attaches to connector retainer plate holes using 4-40 screws supplied with backshell (remove and discard retainer plate). Cable shield attaches to backshell with .24 inch (6.1 mm) wide Band-Master ATS® banding strap. Options include slots in banding area, Qwik-Ty® strain relief arm and EMI gasket.

CONNECTOR COMPATIBILITY

Remove insert retainer plate from connector and discard.

PART NUMBER

Sample PN → 527-464 XM P1 A8 B6 C5 S -1 L J

Base P/N	527-464
Material / Finish	M Aluminum / Electroless Nickel TZ Aluminum / Tin-Zinc NF Aluminum / Olive Drab Cadmium XM Composite / Electroless Nickel XW Composite / Olive Drab Cadmium
Connector Code	P P1 P2 P4 P6 *See Table 1*
Port A Entry Size	*Omit* Port A Deleted A4 A5 A6 A8 A9 *See Table 2*
Port B Entry Size	*Omit* Port B Deleted B4 B5 B6 B8 B9 *See Table 2*
Port C Entry Size	*Omit* Port C Deleted C4 C5 C6 C8 C9 *See Table 2*
Slots	*Omit* No Slots S Slots Included
EMI Gasket	*Omit* No Gasket -1 Gasket Included *(Qty 2)*
Qwik-Ty	*Omit* Qwik-Ty Strain Relief Arms Included L Qwik-Ty Arms Deleted
Band	*Omit* No Band B Standard Bands Included J Slim Standard Bands Included

TABLE 1 CONNECTOR CODE

P	All Manufacturers (*unless listed below*) Due to non-standard connector modifications this backshell may require design alterations to fit properly. Consult factory to ensure a proper fit.
P1	ITT Cannon BKAD/F/X Non-Environ. Plug
P2	Radiall NSXE/H/C Environmental Plug Amphenol AE*/AC*/AS* Environ. Plug Souriau S60*/S62*/SB62*/SB63/SB6A Plug
P4	TE 2157236 Non-Environmental Plug
P6	ITT Cannon BKAC & BKAE Environ. Plug

TABLE 2 ENTRY SIZE

Entry Size	Entry Diameter in	Entry Diameter mm	K in	K mm	ø L in	ø L mm
4	.50	12.7	.38	9.7	.72	18.3
5	.63	16.0	.47	11.9	.85	21.6
6	.75	19.1	.56	14.2	.97	24.6
8	1.00	25.4	.69	17.5	1.22	31.0
9	1.12	28.4	.78	19.8	1.34	34.0

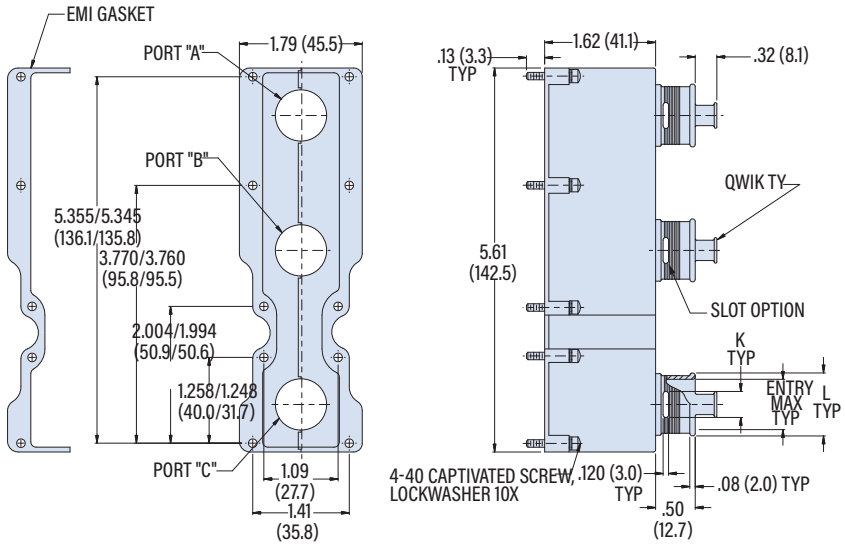

BAND OPTIONS

Terminate cable braid to backshell with optional band strap and banding tool. Pre-coiled bands are passivated stainless steel. Slim Standard bands have reduced thickness for weight reduction.

Band Type and Width	Hand Tool	Pneumatic Tool
Standard: .24 (6.1)	601-100	601-106
Slim Standard: .24 (6.1)	601-109	601-110

© 2024 Glenair, Inc • 1211 Air Way, Glendale, CA 91201 • 818-247-6000 • www.glenair.com • U.S. CAGE code 06324 • Rectangular Accessories
Dimensions in Inches (millimeters) are subject to change without notice.

527-126

ARINC 600 Size 3 Backshell, Strain Relief

- Saddle Clamp Strain Relief
- For Unshielded Cables

527-126

This strain-relief backshell fits ARINC 600 Size 3 connectors.

Saddle clamps have adapter code H metric thread interface (*ref. 620HS011*). Backshell attaches to connector insert retainer plate holes(*Remove and discard retainer plates for Connector Codes P, P1, P3 and P5*). Aluminum with stainless steel hardware.

TABLE 1 CONNECTOR CODE

P	All Manufacturers (*unless listed below*) Due to non-standard connector modifications this backshell may require design alterations to fit properly. Consult factory to ensure a proper fit. *Remove and discard insert retainer plates*
P1	ITT Cannon BKAD****322 Plug *Remove and discard insert retainer plates*
P2	ITT Cannon/Radiall Environmental Plug *Attach backshell to insert retainer plates*
P3	ITT Cannon / Boeing BACC66 Plug *Remove and discard insert retainer plates*
P5	Radiall / Boeing BACC66 Plug *Remove and discard insert retainer plates*
P6	ITT Cannon BKAC & BKAE****322 Envir. Plug *Attach backshell to insert retainer plates*

TABLE 2 ENTRY SIZE

Entry Size	Thread Size X1.0	A In	A mm	Cable Range Min In	Cable Range Min mm	Cable Range Max In	Cable Range Max mm
3	M18	.790	20.0	.190	4.8	.328	8.3
4	M22	.790	20.0	.260	6.6	.457	11.6
5	M25	.915	23.2	.283	7.2	.614	15.6
6	M28	1.165	25.6	.325	8.3	.634	16.1

THREADED PORT, NO CLAMP

Add "*L*" to port entry size to delete cable clamp and retain threaded port. (I.e., "*LB4*" = less cable clamp with M22 threaded port at port B. Threaded port conforms to Adapter Code H interface (D38999 Series III/IV).

PART NUMBER

Sample PN➜ **527-126 M P1 A3 B3 C4 D4 E6 F6**

Base P/N	**527-126**
Finish	**M** Electroless Nickel **TZ** Tin-Zinc **NF** Olive Drab Cadmium
Connector Code	**P P1 P2 P3 P5 P6** *See Table 1*
Port A Entry Size	***Omit*** Port A Deleted **A3 A4 A5 A6** *See Table 2*
Port B Entry Size	***Omit*** Port B Deleted **B3 B4 B5 B6** *See Table 2*
Port C Entry Size	***Omit*** Port C Deleted **C3 C4 C5 C6** *See Table 2*
Port D Entry Size	***Omit*** Port D Deleted **D3 D4 D5 D6** *See Table 2*
Port E Entry Size	***Omit*** Port E Deleted **E3 E4 E5 E6** *See Table 2*
Port F Entry Size	***Omit*** Port F Deleted **F3 F4 F5 F6** *See Table 2*

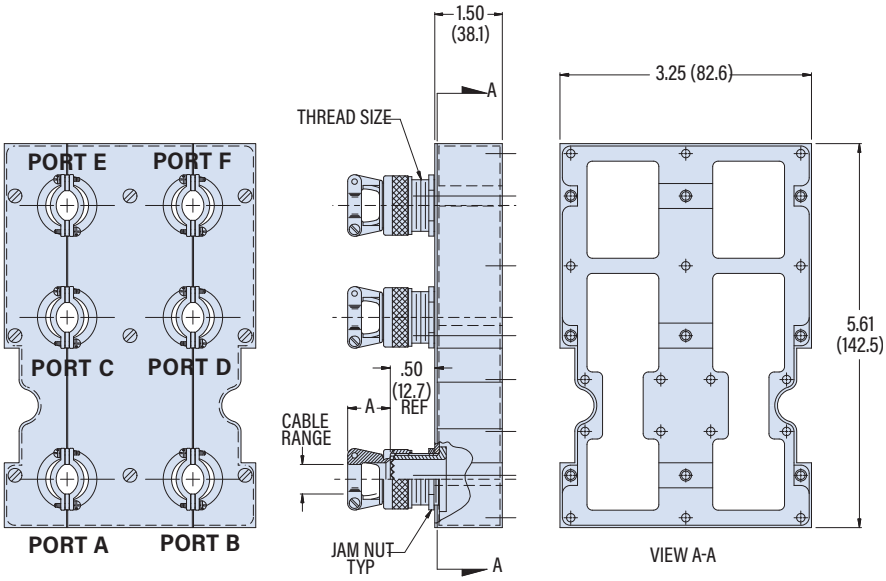

527-199

ARINC 600 Size 3 Backshell, EMI TAG Ring®

■ TAG Ring® Shield Termination

527-199

This EMI TAG Ring® backshell fits ARINC 600 Size 3 connectors.

Designed for individual wire shields termination. Aluminum shell, nut and clamp. PTFE friction washer, gold plated beryllium copper ground spring, SS hardware.

TAG® RING

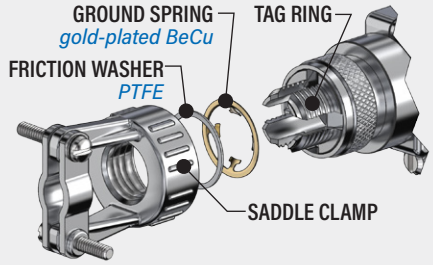

TABLE 1 CONNECTOR CODE

P	**All Manufacturers** (*unless listed below*) Due to non-standard connector modifications this backshell may require design alterations to fit properly. Consult factory to ensure a proper fit. *Remove and discard insert retainer plates*
P1	ITT Cannon BKAD****322 Plug *Remove and discard insert retainer plates*
P2	ITT Cannon/Radiall Environmental Plug *Attach backshell to insert retainer plates*
P3	ITT Cannon / Boeing BACC66 Plug *Remove and discard insert retainer plates*
P5	Radiall / Boeing BACC66 Plug *Remove and discard insert retainer plates*
P6	ITT Cannon BKAC & BKAE****322 Envir. Plug *Attach backshell to insert retainer plates*

TABLE 2 ENTRY SIZE

Entry Size	Cable Entry Min In	Min mm	Max In	Max mm	B Max In	B Max mm	C Max In	C Max mm
2	.125	3.2	.250	6.4	.968	24.6	.545	13.8
3	.250	6.4	.375	9.5	1.046	26.6	.670	17.0
4	.250	6.4	.500	12.7	1.156	29.4	.795	20.2
5	.375	9.5	.625	15.9	1.218	30.9	.920	23.4
6	.500	12.7	.750	19.1	1.343	34.1	1.045	26.5
7	.625	15.9	.875	22.2	1.468	37.3	1.170	29.7
8	.750	19.1	1.000	25.4	1.593	40.5	1.295	32.9

PART NUMBER

Sample PN➜ 527-199 M P1 A3 B3 C4 D4 E6 F6 L

Base P/N	527-199	
Finish	M	Electroless Nickel
	TZ	Tin-Zinc
	NF	Olive Drab Cadmium
Connector Code	P P1 P2 P3 P5 P6 *See Table 1*	
Port A Entry Size	*Omit*	Port A Deleted
	A2 A3 A4 A5 A6 A7 A8 *See Table 2*	
Port B Entry Size	*Omit*	Port B Deleted
	B2 B3 B4 B5 B6 B7 B8 *See Table 2*	
Port C Entry Size	*Omit*	Port C Deleted
	C2 C3 C4 C5 C6 C7 C8 *See Table 2*	
Port D Entry Size	*Omit*	Port D Deleted
	D2 D3 D4 D5 D6 D7 D8 *See Table 2*	
Port E Entry Size	*Omit*	Port E Deleted
	E2 E3 E4 E5 E6 E7 E8 *See Table 2*	
Port F Entry Size	*Omit*	Port F Deleted
	F2 F3 F4 F5 F6 F7 F8 *See Table 2*	
Strain Relief	L	Saddle Clamp
	G	Nut

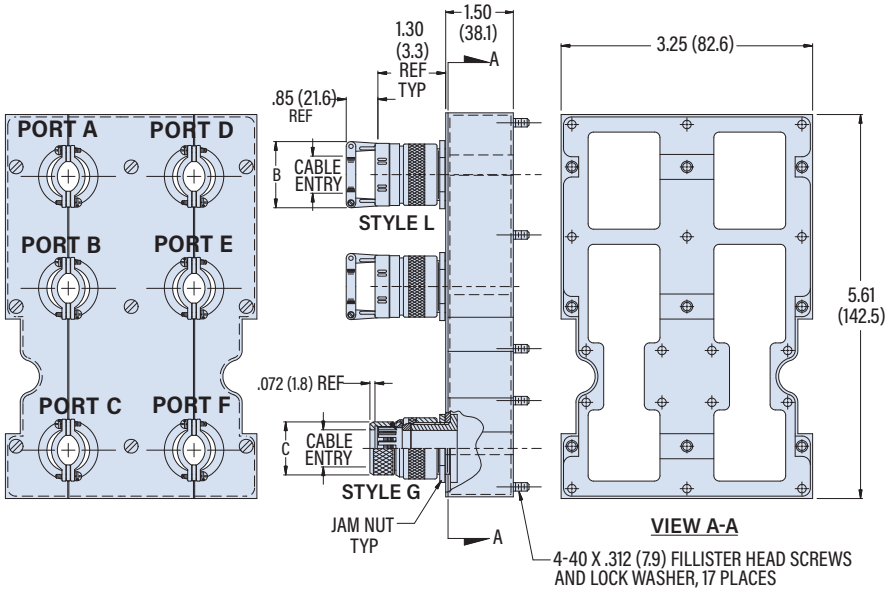

© 2024 Glenair, Inc • 1211 Air Way, Glendale, CA 91201 • 818-247-6000 • www.glenair.com • U.S. CAGE code 06324 • Rectangular Accessories
Dimensions in Inches (millimeters) are subject to change without notice.

527-216

ARINC 600 Size 3 Backshell, EMI Banding

- Band-Master ATS Shield Termination
- Qwik-Ty Strain Relief

527-216

This EMI banding backshell fits ARINC 600 Size 3 connectors.

Attach cable shields with Band-Master ATS banding straps. Backshell attaches to connector insert retainer plate holes. Aluminum shell, stainless steel screws and washers.

TABLE 1 CONNECTOR CODE

P	**All Manufacturers** (*unless listed below*) Due to non-standard connector modifications this backshell may require design alterations to fit properly. Consult factory to ensure a proper fit. *Remove and discard insert retainer plates*
P1	ITT Cannon BKAD****322 Plug *Remove and discard insert retainer plates*
P2	ITT Cannon/Radiall Environmental Plug *Attach backshell to insert retainer plates*
P3	ITT Cannon / Boeing BACC66 Plug *Remove and discard insert retainer plates*
P5	Radiall / Boeing BACC66 Plug *Remove and discard insert retainer plates*
P6	ITT Cannon BKAC & BKAE****322 Envir. Plug *Attach backshell to insert retainer plates*

TABLE 2 ENTRY SIZE

Entry Size	Entry Diameter in	Entry Diameter mm	J in	J mm	L in	L mm
2	.25	6.4	.38	9.7	.22	5.6
3	.38	9.7	.50	12.7	.28	7.1
4	.50	12.7	.63	16.0	.33	8.4
5	.63	16.0	.75	19.1	.38	9.7
6	.75	19.1	.88	22.4	.38	9.7
7	.87	22.1	1.00	25.4	.38	9.7
8	1.00	25.4	1.12	28.4	.38	9.7
9	1.12	28.4	1.25	31.8	.38	9.7

FIGURE 1 MOUNTING SCREWS

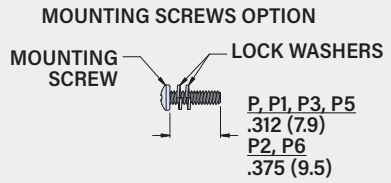

PART NUMBER

Sample PN➜ **527-216 M P1 A3 B3 C4 D4 E6 F6 S -1 T M**

Base P/N	**527-216**	
Finish	**M**	Electroless Nickel
	TZ	Tin-Zinc
	NF	Olive Drab Cadmium
Connector Code	*See Table 1*	
	P P1 P2 P3 P5 P6	
Port A Entry Size *See Table 2*	***Omit***	Port A Deleted
	A2 A3 A4 A5 A6 A7 A8 A9	
Port B Entry Size *See Table 2*	***Omit***	Port B Deleted
	B2 B3 B4 B5 B6 B7 B8 B9	
Port C Entry Size *See Table 2*	***Omit***	Port C Deleted
	C2 C3 C4 C5 C6 C7 C8 C9	
Port D Entry Size *See Table 2*	***Omit***	Port D Deleted
	D2 D3 D4 D5 D6 D7 D8 D9	
Port E Entry Size *See Table 2*	***Omit***	Port E Deleted
	E2 E3 E4 E5 E6 E7 E8 E9	
Port F Entry Size *See Table 2*	***Omit***	Port F Deleted
	F2 F3 F4 F5 F6 F7 F8 F9	
Slots	***Omit***	No Slots
	S	Slots Included
EMI Gasket	***Omit***	No Gasket
	-1	Gasket Included *(Qty 3)*
Qwik-Ty	***Omit***	Less Qwik-Ty Arm
	T	Qwik-Ty Strain Relief Arms Included
Mounting Screws *See Fig. 1*	***Omit***	Delete Mounting Screws
	M	Mounting Screws (qty 17) and lock washers (34) Included
Band	***Omit***	No Band
	B	Standard Bands Included
	J	Slim Standard Bands Included

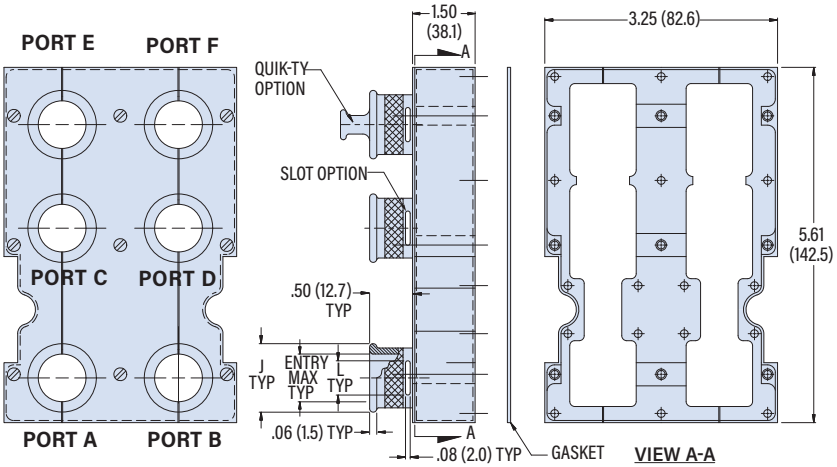

BAND OPTIONS

Terminate braid to backshell with band strap and banding tool. Pre-coiled bands are passivated SST. Slim Standard bands have reduced thickness for weight reduction.

Band Type and Width	Hand Tool	Pneumatic Tool
Standard: .24 (6.1)	601-100	601-106
Slim Standard: .24 (6.1)	601-109	601-110

© 2024 Glenair, Inc • 1211 Air Way, Glendale, CA 91201 • 818-247-6000 • www.glenair.com • U.S. CAGE code 06324 • Rectangular Accessories
Dimensions in Inches (millimeters) are subject to change without notice.

527-114

M83527 Backshell, M25 and M28 Thread

■ Adapter Code H (D38999) Entry

527-114

This M25 and M28 thread backshell adapter fits M83527 connectors

Backshell attaches to connector insert retainer plate holes. Two module sizes to fit both sizes of inserts. Backshell has metric threads and teeth conforming to MIL-DTL-38999 Series III/IV interface standard (Adapter Code H). Add strain relief clamp or EMI adapter, sold separately.
Aluminum shell, stainless steel screws and washers.

PART NUMBER

Sample PN➜ **527-114 NF 01 17**

Base P/N	527-114	
Finish	M	Electroless Nickel
	TZ	Tin-Zinc
	NF	Olive Drab Cadmium
Module Size	01	Large- for Cavities A, C, E
	02	Small- for Cavities B, D, F
Entry Size	17	M25 Thread, .828 (21.0) I.D.
	19	M28 Thread, .910 (23.1) I.D.

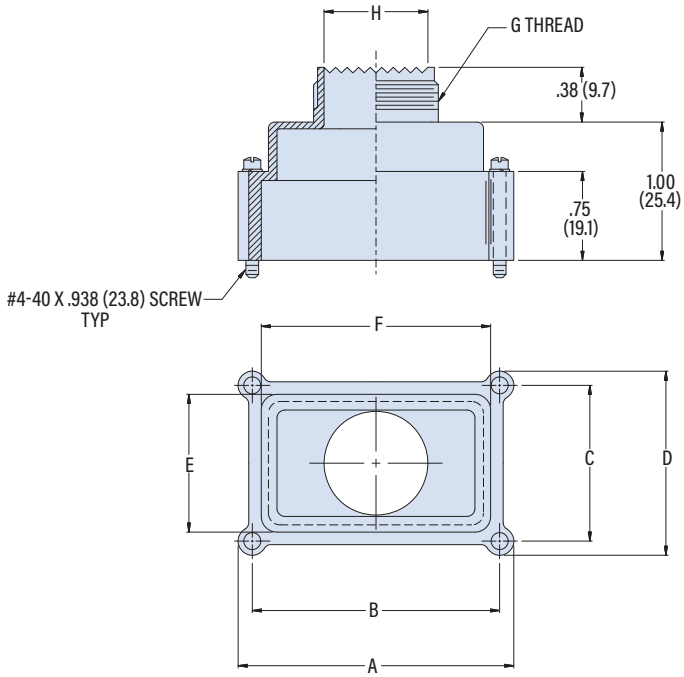

Module Size	A in	A mm	B in	B mm	C in	C mm	D in	D mm	E in	E mm	F in	F mm
01	1.97	50.0	1.770	45.0	1.187	30.1	1.39	35.3	1.125	28.6	1.615	41.0
02	1.53	38.9	1.329	33.8	1.187	30.1	1.39	35.3	1.125	28.6	1.175	29.8

ENTRY SIZE

Entry Size	G Thread	ø H in	ø H mm
17	M25 X 1.0-6g	.828	21.0
19	M28 X 1.0-6g	.910	23.1

© 2024 Glenair, Inc • 1211 Air Way, Glendale, CA 91201 • 818-247-6000 • www.glenair.com • U.S. CAGE code 06324 • Rectangular Accessories
Dimensions in Inches (millimeters) are subject to change without notice.

527-543

M83527 Backshell, EMI Banding

■ Band-Master ATS Shield Termination

527-543

This EMI banding backshell fits M83527 connectors

Attach cable shield to backshell with Band-Master ATS banding strap. Backshell attaches to connector insert retainer plate holes. Two module sizes to fit both sizes of inserts. Backshell has groove for optional lipped shrink boot.

Aluminum shell, stainless steel screws and washers. EMI gasket: monel mesh embedded in neoprene.

PART NUMBER

Sample PN➜ **527-543 NF 01 05 T J**

Base P/N	**527-543**	
Finish	**M**	Electroless Nickel
	TZ	Tin-Zinc
	NF	Olive Drab Cadmium
Module Size	**01**	Large– for Cavities A, C, E
	02	Small– for Cavities B, D, F
Entry Size	**03**	.375 (9.5)
	04	.500 (12.7)
	05	.625 (15.9)
	06	.750 (19.1)
	07	.875 (22.2)
Shrink Boot Option	***Omit***	None
	T	Standard Heatshrink Boot
	T1	Standard Heatshrink Boot w/ Hot Melt Adhesive
	H	Zero Halogen Heatshrink Boot
	H1	Zero Halogen Heatshrink Boot w/ Hot Melt Adhesive
Band	***Omit***	No Band
	B	Standard Band Included
	J	Slim Standard Band Included

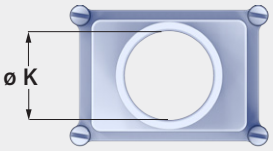

ENTRY SIZE

ENTRY SIZE

Entry Size	ø K in	ø K mm	ø L in	ø L mm	ø M in	ø M mm
03	.375	9.5	.500	12.7	.562	14.3
04	.500	12.7	.625	15.9	.688	17.5
05	.625	15.9	.750	19.1	.812	20.6
06	.750	19.1	.875	22.2	.938	23.8
07	.875	22.2	1.000	25.4	1.062	27.0

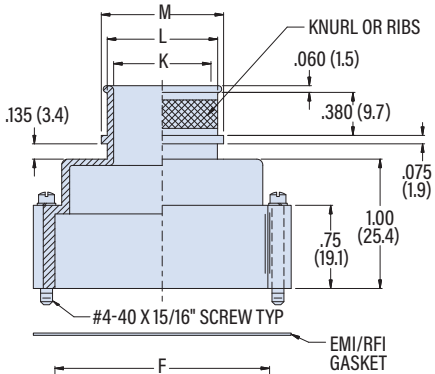

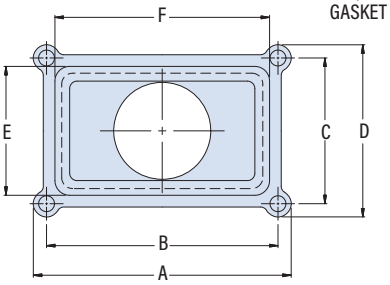

SHRINK BOOT

Optional heatshrink boot provides cable strain relief and environmental protection. Standard boot is high preformance semi-rigid elastomer. Zero halogen boot is semi-rigid polyolefin. Available with W1 hot melt adhesive pre-coat. Add "W1" to part number to specify hot melt adhesive pre-coat.

Entry Size	Standard Boot	Zero Halogen Boot
03	770-001S103	770-001S203
04	770-001S104	770-001S204
05	770-001S104	770-001S204
06	770-001S105	770-001S205
07	770-001S105	770-001S205

BAND OPTIONS

Terminate cable braid to backshell with optional band strap and banding tool. Pre-coiled bands are passivated stainless steel. Slim Standard bands have reduced thickness for weight reduction.

Band Type and Width	Hand Tool	Pneumatic Tool
Standard: .24 (6.1)	601-100	601-106
Slim Standard: .24 (6.1)	601-109	601-110

Module Size	A in	A mm	B in	B mm	C in	C mm	D in	D mm	E in	E mm	F in	F mm
01	1.97	50.0	1.770	45.0	1.187	30.1	1.39	35.3	1.125	28.6	1.615	41.0
02	1.53	38.9	1.329	33.8	1.187	30.1	1.39	35.3	1.125	28.6	1.175	29.8

EPXB TYPE
AVIATION
INDUSTRY MODULAR
CONNECTOR SERIES

Backshells

Modular EPXB, BACC65, EN4165, and SIM EMI/RFI and Strain Relief Backshells

EPXB type modular connectors are widely employed in aviation for their versatility and reliability. EPXB type connectors offer a modular construction, enabling easy customization and flexibility in configuring complex avionics systems. These connectors feature a ruggedized design, capable of withstanding harsh environmental conditions such as extreme temperatures, vibrations, and electromagnetic interference commonly encountered in aircraft operations. EPXB type connectors support high-speed data transmission, power distribution, and signal connections, making them integral components in avionic systems, communication equipment, and IFE systems.

Glenair Signature Modular Rectangular Backshells

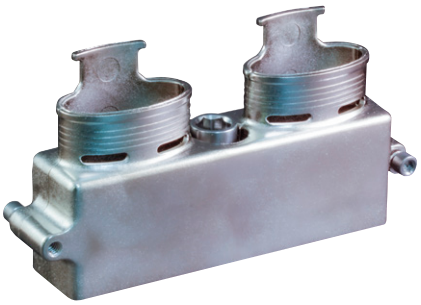

527-410

This EMI banding backshell fits BACC65AA/AB and EPXB2 connectors

The 527-410 is a split-shell EMI banding backshell with a low-profile 1" (25.4) can height. Elliptical cable entries accommodate large wire bundles. Cable shields attach with Standard or Slim Standard Band-Master ATS® band straps.

Modular Rectangular Backshell Selection Guide

BACC65AA/AB EPXB2 Backshells

EMI Banding Backshell
2" (50.8) Can Height
BACC65AA/AB, EPXB2
527-260
Page E-2

EMI Banding Backshell
2" Can (50.8) Height
BACC65AA/AB, EPXB2, Radiall 617610100
527-265
Page E-3

EMI Banding Backshell
1.5" (38.1) Can Height
BACC65AA/AB, EPXB2
527-281
Page E-4

EMI Banding Backshell
1.0" (38.1) Can Height
BACC65AA/AB, EPXB2
527-410
Page E-5

EMI Banding Backshell
with Saddle Clamps
BACC65AA/AB, EPXB2
527-254
Page E-6

EMI Banding Backshell
1.56" (39.6) Can Height
EPXB2
527-268
Page E-7

EMI Banding Backshell
End Entry
EPXB2
527-531
Page E-8

EN4165 SIM Backshells

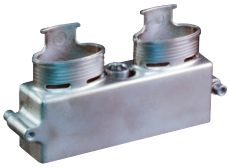

EMI Banding Backshell
SIM AD 6 4 Module
527-495
Page E-9

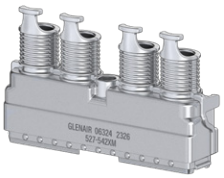

EMI Banding Backshell
Snap-Together Composite
SIM AD 6 Four Module
527-542
Page E-10

EMI Banding Backshell
Snap-Together Composite
SIM AD 6 Two Module
527-586
Page E-11

BACC65BU/CA EN4165 Clampshells

Clampshell, Single Module
EN4165, BACC65BU/CA
527-407
Page E-12

Clampshell, Single
Extended Length Module
EN4165, BACC65BU/CA
527-493
Page E-13

© 2024 Glenair, Inc • 1211 Air Way, Glendale, CA 91201 • 818-247-6000 • www.glenair.com • U.S. CAGE code 06324 • Rectangular Accessories
Dimensions in Inches (millimeters) are subject to change without notice.

527-260

EMI Backshell, BACC65AA/AB, EPXB2

- Elliptical Entry
- Band-Master ATS Shield Termination
- Qwik-Ty Strain Relief

527-260

This EMI banding backshell fits BACC65AA/AB and EPXB2 connectors

Split diecast EMI banding backshell. Elliptical cable entries accommodate large wire bundles. Backshell attaches to connector with hex drive M8 center screw. Cable shields attach to backshell with .24 inch (6.1 mm) wide Band-Master ATS® banding strap. Aluminum with passivated stainless steel hardware.

PART NUMBER

Sample PN➜ **527-260 ME S S B**

	Base P/N	527-260	
	Finish	ME	Electroless Nickel
Port X	Qwik-Ty Style	S	Straight
Port Y	Qwik-Ty Style	S	Straight
	Band	*Omit*	No Band
		K	Standard Bands Included (qty. 2)
		J	Slim Standard Bands Included (qty. 2)

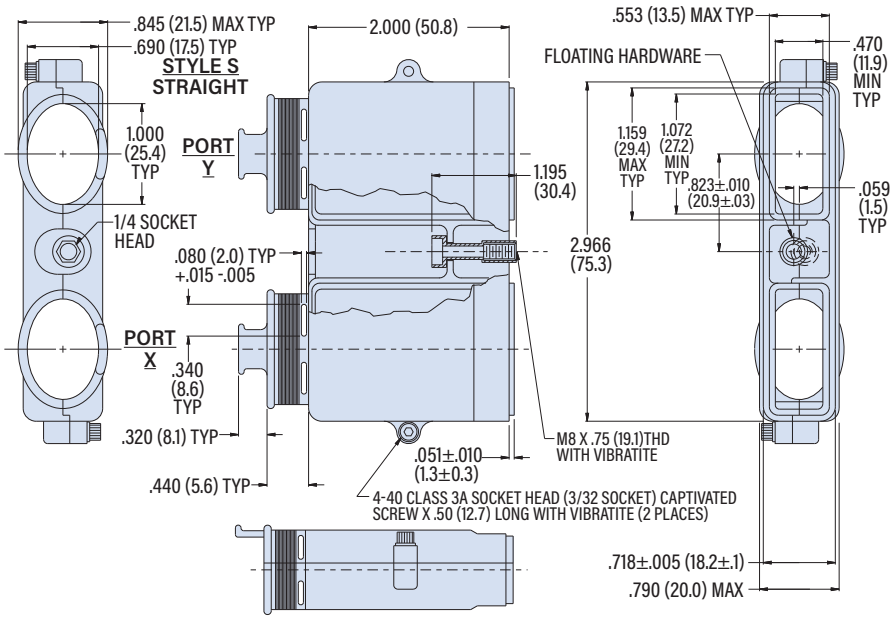

BAND OPTIONS

Terminate cable braid to backshell with optional band strap and banding tool. Pre-coiled bands are passivated stainless steel. Slim Standard bands have reduced thickness for weight reduction.

Band Type and Width	Hand Tool	Pneumatic Tool
Standard: .24 (6.1)	601-100	601-106
Slim Standard: .24 (6.1)	601-109	601-110

© 2024 Glenair, Inc • 1211 Air Way, Glendale, CA 91201 • 818-247-6000 • www.glenair.com • U.S. CAGE code 06324 • Rectangular Accessories
Dimensions in Inches (millimeters) are subject to change without notice.

Modular Rectangular (EPXB, BACC65, EN4165, SIM)

527-265

EMI Backshell, Radiall 617610100, EPXB2, BACC65AA/AB

- Elliptical Entry
- Band-Master ATS Shield Termination
- Qwik-Ty Strain Relief

PART NUMBER

Sample PN➜	527A265	M	K

Base P/N	**527A265**	#6-32 Mounting Screw *(Radiall P/N 617610100)*
	527B265	M8 Mounting Screw *(EPXB2, BACC65AA/AB)*
Finish	**M**	Electroless Nickel
Bands	***Omit***	No Band
	K	Standard Bands Included (qty. 2)
	J	Slim Standard Bands Included (qty. 2)

527-265

This EMI banding backshell fits Radiall 617610100, EPXB2, and BACC65AA/AB connectors

Split diecast EMI banding backshell. Elliptical cable entries accommodate large wire bundles. Backshell attaches to connector with hex drive center mounting screw. Cable shields attach to backshell with .24 inch (6.1 mm) wide Band-Master ATS® banding strap. Aluminum with passivated stainless steel hardware.

BAND OPTIONS

Terminate cable braid to backshell with optional band strap and banding tool. Pre-coiled bands are passivated stainless steel. Slim Standard bands have reduced thickness for weight reduction.

Band Type and Width	Hand Tool	Pneumatic Tool
Standard: .24 (6.1)	601-100	601-106
Slim Standard: .24 (6.1)	601-109	601-110

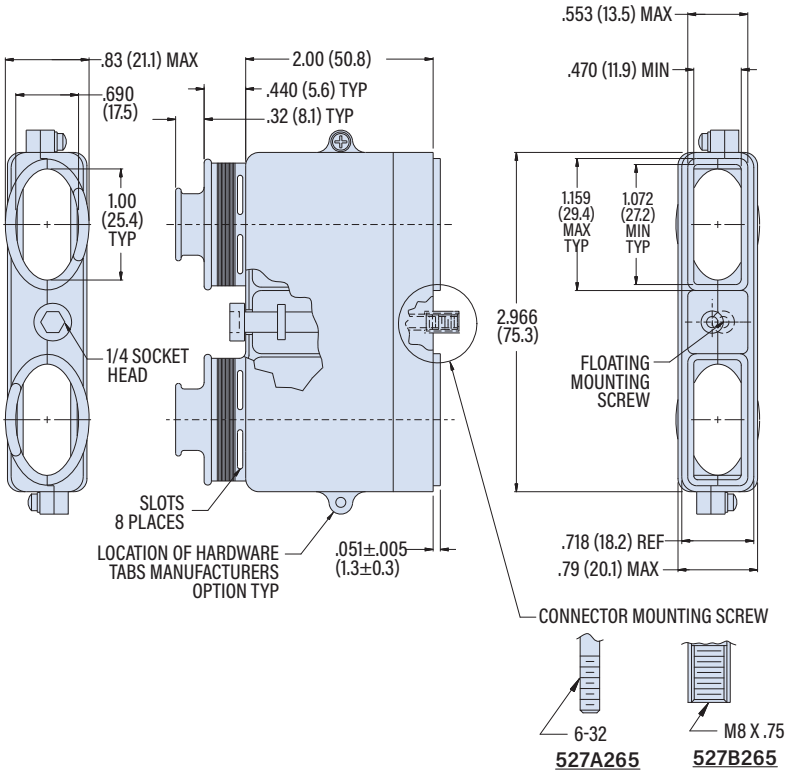

MODULAR RECTANGULAR BACKSHELLS

527-281

EMI Banding Backshell, EPXB2, BACC65AA/AB

- Solid, 1.5" Can Height
- Band-Master ATS Shield Termination
- Qwik-Ty Strain Relief

527-281

This EMI banding backshell fits EPXB2 and BACC65AA/AB connectors

Low-profile. 1.5 inch (38.1mm) can height. Backshell attaches to connector with slotted drive center mounting screw. Cable shields attach to backshell with .24 inch (6.1 mm) wide Band-Master ATS® banding strap. Aluminum with passivated stainless steel hardware.

BAND OPTIONS

Terminate cable braid to backshell with optional band strap and banding tool. Pre-coiled bands are passivated stainless steel. Slim Standard bands have reduced thickness for weight reduction.

Band Type and Width	Hand Tool	Pneumatic Tool
Standard: .24 (6.1)	601-100	601-106
Slim Standard: .24 (6.1)	601-109	601-110

PART NUMBER

Sample PN➜ **527-281 M K**

Base P/N	527-281	
Finish	M	Electroless Nickel
Band	*Omit*	No Band
	K	Standard Bands Included (qty. 2)
	J	Slim Standard Bands Included (qty. 2)
Qwik-Ty	*Omit*	Qwik-Ty Arms Included
	L	Less Qwik-Ty Arms

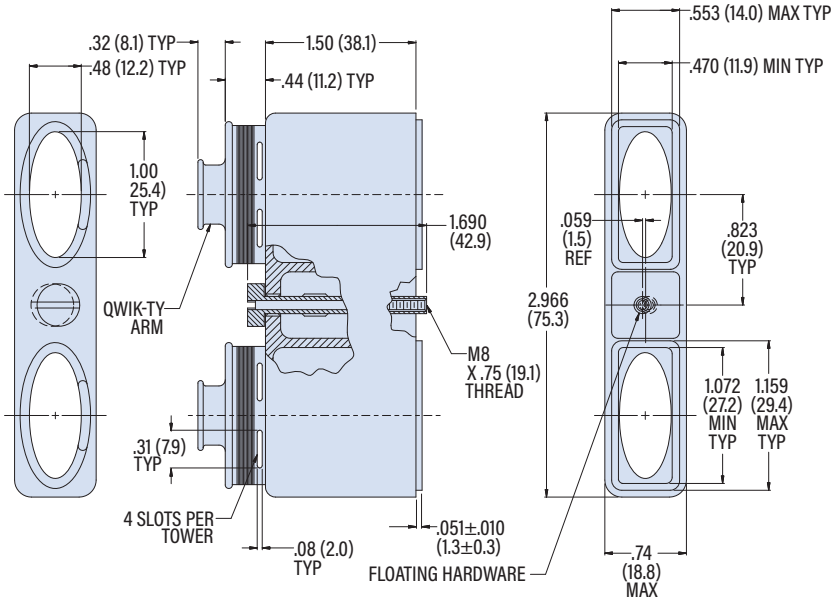

© 2024 Glenair, Inc • 1211 Air Way, Glendale, CA 91201 • 818-247-6000 • www.glenair.com • U.S. CAGE code 06324 • Rectangular Accessories
Dimensions in Inches (millimeters) are subject to change without notice.

527-410

EMI Backshell, BACC65AA/AB, EPXB2

- Low Profile 1" Can Height
- Band-Master ATS Shield Termination
- Qwik-Ty Strain Relief

527-410

This EMI banding backshell fits BACC65AA/AB and EPXB2 connectors

Split diecast EMI banding backshell. Low profile 1" (25.4) can height. Elliptical cable entries accommodate large wire bundles. Backshell attaches to connector with hex drive M8 center screw. Cable shields attach to backshell with .24 inch (6.1 mm) wide Band-Master ATS® banding strap. Nickel-plated aluminum with passivated stainless steel hardware.

PART NUMBER

Sample PN➜ **527-410 ME S S B**

	Base P/N	527-410	
	Finish	ME	Electroless Nickel
Port X	Qwik-Ty Style	S	Straight
Port Y	Qwik-Ty Style	S	Straight
	Band	*Omit*	No Band
		K	Standard Bands Included (qty. 2)
		J	Slim Standard Bands Included (qty. 2)

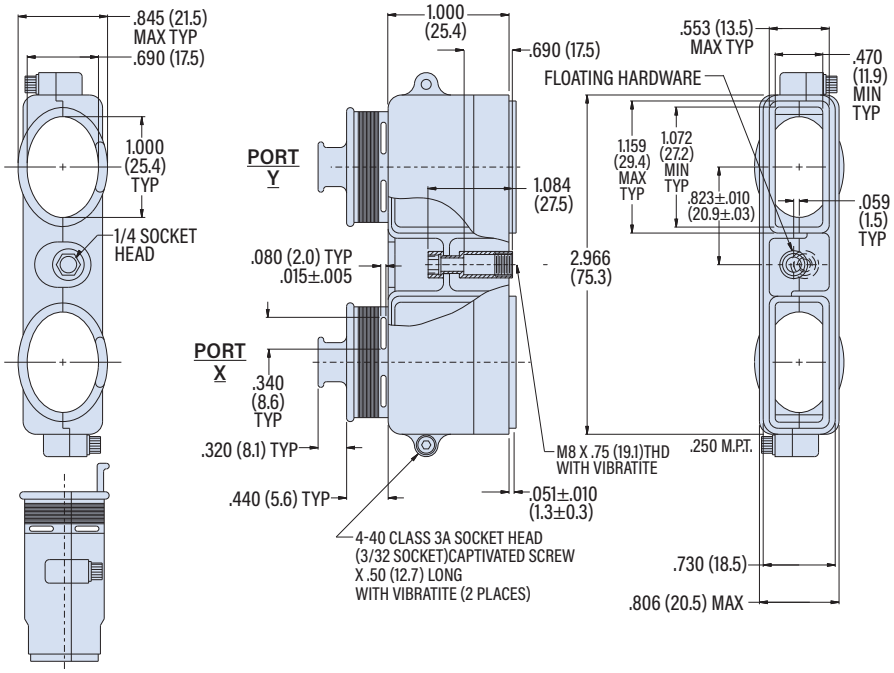

BAND OPTIONS

Terminate cable braid to backshell with optional band strap and banding tool. Pre-coiled bands are passivated stainless steel. Slim Standard bands have reduced thickness for weight reduction.

Band Type and Width	Hand Tool	Pneumatic Tool
Standard: .24 (6.1)	601-100	601-106
Slim Standard: .24 (6.1)	601-109	601-110

527-254

EMI Backshell, BACC65AA/AB, EPXB2

- Low Profile
- Band-Master ATS Shield Termination
- Saddle Clamp Strain Relief

527-254

This EMI banding backshell fits BACC65AA/AB and EPXB2 connectors

Backshell attaches to connector with slot drive M8 center screw. Cable shields attach to backshell with .24 inch (6.1 mm) wide Band-Master ATS® banding strap. Saddle clamps have full-radius bars and self-locking silver plated stainless steel clinch nuts. Aluminum with passivated stainless steel screws.

BAND OPTIONS

Terminate cable braid to backshell with optional band strap and banding tool. Pre-coiled bands are passivated stainless steel. Slim Standard bands have reduced thickness for weight reduction.

Band Type and Width	Hand Tool	Pneumatic Tool
Standard: .24 (6.1)	601-100	601-106
Slim Standard: .24 (6.1)	601-109	601-110

PART NUMBER

Sample PN→	527-254	M	S	S	B

Base P/N	527-254	
Finish	M	Electroless Nickel
	TZ	Tin-Zinc
	NF	Olive Drab Cadmium
Port X	S	Straight
Port Y	S	Straight
Band	*Omit*	No Band
	K	Standard Bands Included (qty. 2)
	J	Slim Standard Bands Included (qty. 2)

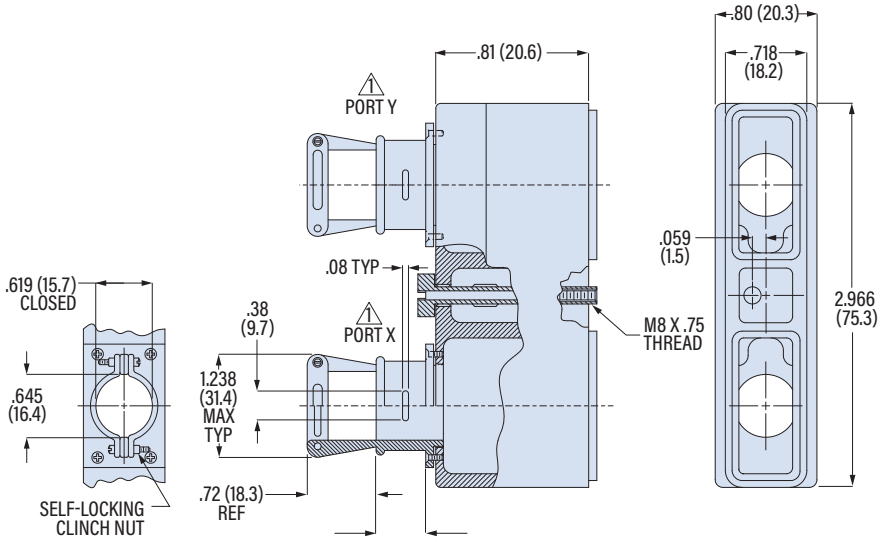

© 2024 Glenair, Inc • 1211 Air Way, Glendale, CA 91201 • 818-247-6000 • www.glenair.com • U.S. CAGE code 06324 • Rectangular Accessories
Dimensions in Inches (millimeters) are subject to change without notice.

527-268

EMI Backshell, EPXB2, Banding

- Top and End Entry
- Band-Master ATS Shield Termination
- Qwik-Ty Strain Relief

527-268

This split EMI banding backshell fits EPXB2 connectors

Backshell attaches to connector with M8 hex drive center mounnting screw. Cable shields attach to backshell with .24 inch (6.1 mm) wide ***Band-Master ATS***® banding strap. Aluminum with passivated stainless steel hardware.

TABLE 1 ENTRY SIZE

Entry Size	A in	A mm	B in	B mm	No. of Braid Slots
02	.250	6.4	.190	4.8	2
03	.312	7.9	.250	6.4	2
04	.375	9.5	.281	7.1	2
05	.438	11.1	.312	7.9	2

BAND OPTIONS

Terminate cable braid to backshell with optional band strap and banding tool. Pre-coiled bands are passivated stainless steel. Slim Standard bands have reduced thickness for weight reduction.

Band Type and Width	Hand Tool	Pneumatic Tool
Standard: .24 (6.1)	601-100	601-106
Slim Standard: .24 (6.1)	601-109	601-110

PART NUMBER

Sample PN➔ **527-268 M A03 B02 C04 T B**

Base P/N	527-268	
Finish	M	Electroless Nickel
	TZ	Tin-Zinc
	NF	Olive Drab Cadmium
Port A Entry Size	*Omit*	Port A Deleted
	A02 A03 A04 A05	*See Table 1*
Port B Entry Size	*Omit*	Port B Deleted
	B02 B03 B04 B05	*See Table 1*
Port C Entry Size	*Omit*	Port C Deleted
	C02 C03 C04 C05	*See Table 1*
Qwik-Ty	*Omit*	No Qwik-Ty
	T	Qwik-Ty Strain Relief Arms Included
Bands	*Omit*	No Band
	B	Standard Band Included (one per port)
	J	Slim Standard Band Included (one per port)

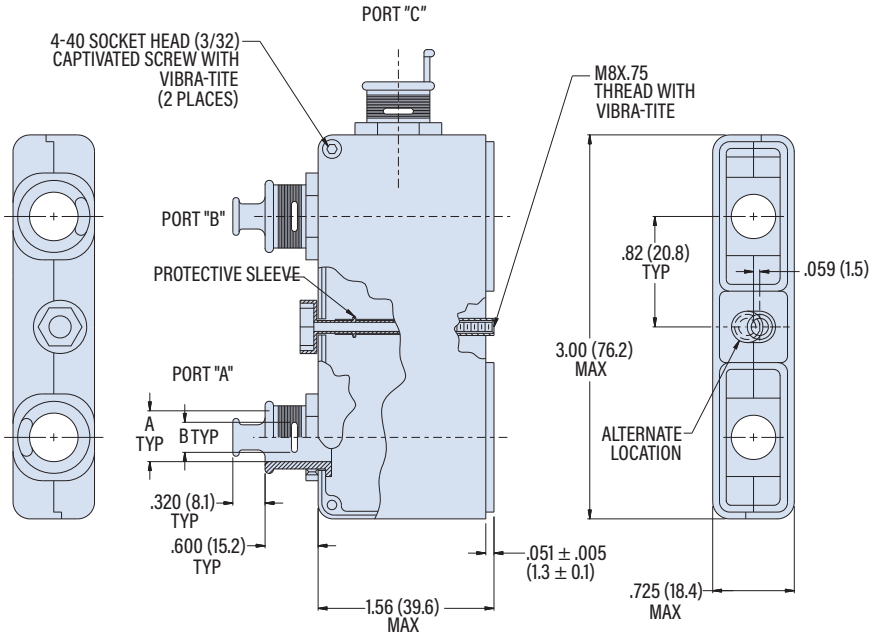

MODULAR RECTANGULAR BACKSHELLS

527-531

EMI Banding Backshell, EPXB2

- Band-Master ATS Shield Termination
- Qwik-Ty Strain Relief

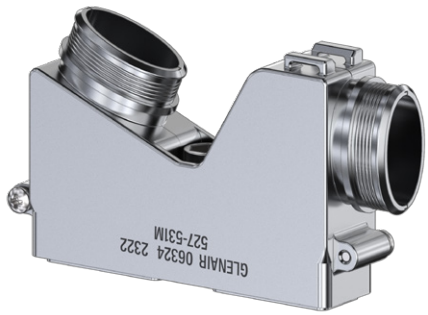

527-531

This split EMI banding backshell fits EPXB2 connectors

Elliptical cable entries accommodate large wire bundles. Backshell attaches to connector with M8 mounting screw. Cable shields attach to backshell with .12 inch (3.0 mm) wide ***Band-Master ATS***® Micro band strap. Aluminum with passivated stainless steel hardware.

PART NUMBER

Sample PN➔ **527-531 M B T**

Base P/N	527-531	
Finish	M	Electroless Nickel
	MT	Nickel-PTFE
Bands	*Omit*	No Band
	K	Micro Band Included (qty. 2)
	J	Micro Slim Band Included (qty. 2)
	L	Micro-Max Band Included (qty. 2)
Shrink Boots	*Omit*	Boots Not Included
	T	Boots Included *(qty 2)*

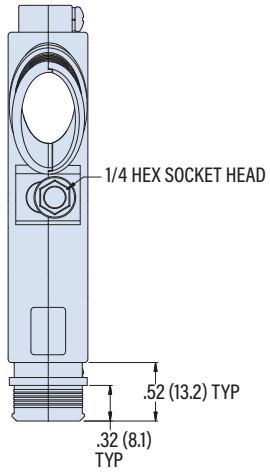

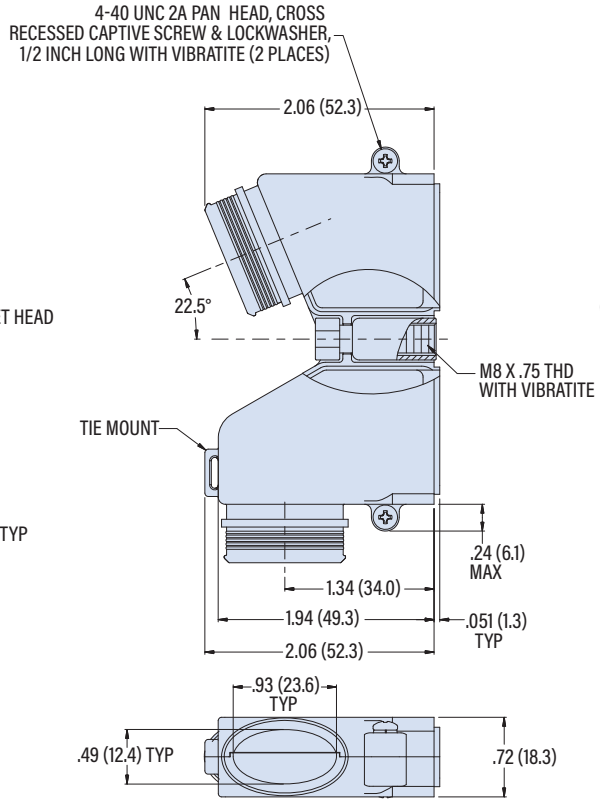

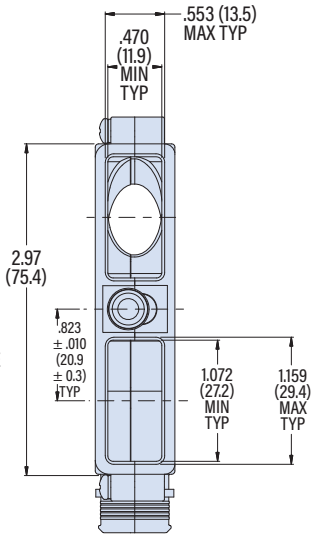

BAND OPTIONS

Terminate cable braid to backshell with optional band strap and banding tool. Pre-coiled bands are passivated stainless steel. Micro Slim bands have reduced thickness for weight reduction. Micro-Max bands are high-tension for lower-resistivity termination.

Band Type and Width	Hand Tool	Pneumatic Tool
Micro: .12 (3.0)	601-101	601-107
Micro Slim: .12 (3.0)	601-122	601-123
Micro-Max: .12 (3.0)	601-129	601-118

© 2024 Glenair, Inc • 1211 Air Way, Glendale, CA 91201 • 818-247-6000 • www.glenair.com • U.S. CAGE code 06324 • Rectangular Accessories
Dimensions in Inches (millimeters) are subject to change without notice.

527-495

EMI Backshell, SIM AD 6

- Lightweight Composite
- Band-Master ATS Shield Termination
- Qwik-Ty Strain Relief

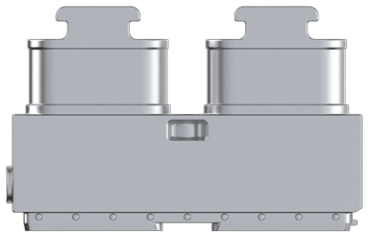

527-495

This split EMI banding backshell fits SIM AD 6 four-module connectors

Snap-together with elliptical cable entries to accommodate large wire bundles. Backshell attaches to connector with captivation clip and screw. Cable shields attach to backshell with .12 inch (3.0 mm) wide ***Band-Master ATS®*** banding strap. Composite thermoplastic with passivated stainless steel hardware and aluminum clip.

PART NUMBER

Sample PN➜ **527-495** **XM** **B**

Base P/N	527-495	
Finish	XM	Electroless Nickel
	XW	Olive Drab Cadmium
Bands	*Omit*	No Band
	K	Micro Band Included (qty. 2)
	J	Micro Slim Band Included (qty. 2)
Hex Jackpost	*Omit*	3mm Hex Jackpost and Socket
	P	7/64 (2.78) Hex Jackpost and Socket
	L	Omit Hex Jackpost and Socket
Qwik-Ty	*Omit*	Qwik-Ty Arms Are Included
	L	Less Qwik-Ty Arms

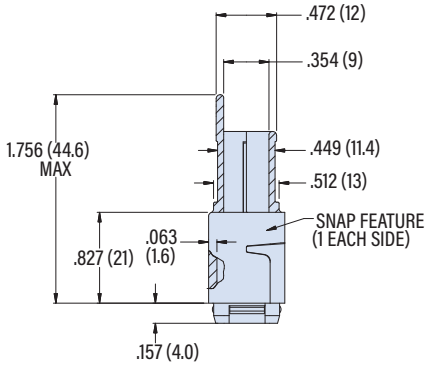

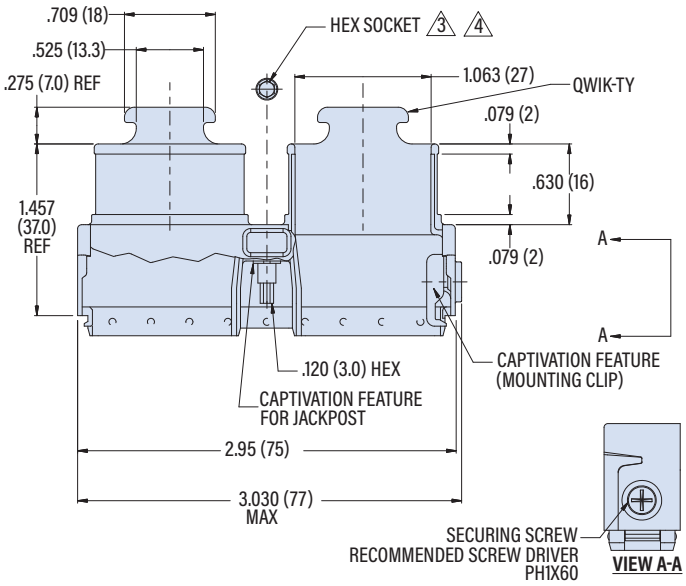

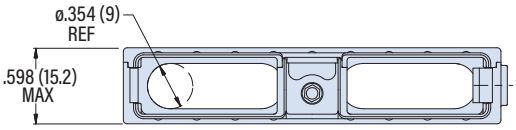

3 STANDARD JACKPOST HAS .120 (3.00) HEX SOCKET, "P" JACKPOST HAS .109 (2.78) HEX SOCKET

4 JACKPOST TO MEET EN4165 REQUIREMENTS

BAND OPTIONS

Terminate cable braid to backshell with optional band strap and banding tool. Pre-coiled bands are passivated stainless steel. Micro Slim bands have reduced thickness for weight reduction.

Band Type and Width	Hand Tool	Pneumatic Tool
Micro: .12 (3.0)	601-101	601-107
Micro Slim: .12 (3.0)	601-122	601-123

527-542

EMI Backshell, SIM AD 6 (Four Modules)

- Band-Master ATS Shield Termination
- Qwik-Ty Strain Relief

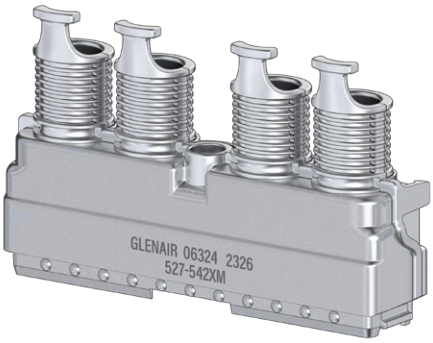

527-542

This split EMI banding backshell fits SIM AD 6 four-module connectors

Split, snap-together backshell attaches to connector with spring clip. Cable shields attach to backshell with .12 inch (3.0 mm) wide ***Band-Master ATS®*** Micro band strap. Composite thermoplastic with passivated stainless steel hardware and beryllium copper spring clip.

BAND OPTIONS

Terminate cable braid to backshell with optional band strap and banding tool. Pre-coiled bands are passivated stainless steel. Micro Slim bands have reduced thickness for weight reduction.

Band Type and Width	Hand Tool	Pneumatic Tool
Micro: .12 (3.0)	601-101	601-107
Micro Slim: .12 (3.0)	601-122	601-123

PART NUMBER

Sample PN➜	527-542	XM	B

Base P/N	527-542	
Finish	XM	Electroless Nickel
	XW	Olive Drab Cadmium
Bands	*Omit*	No Band
	B	Micro Band Included (qty. 4)
	J	Micro Slim Band Included (qty. 4)

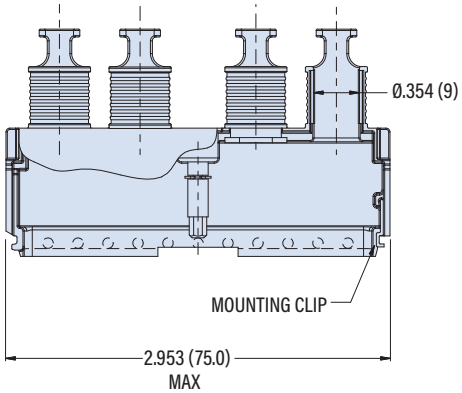

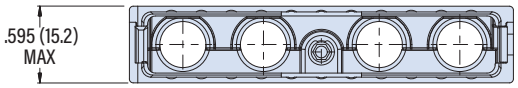

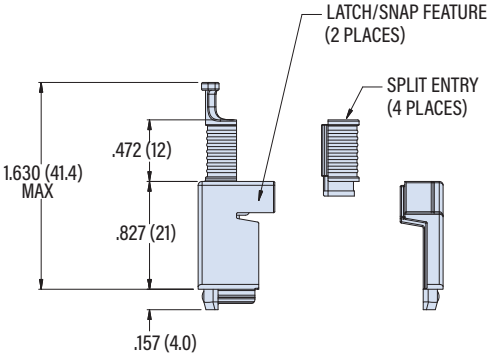

© 2024 Glenair, Inc • 1211 Air Way, Glendale, CA 91201 • 818-247-6000 • www.glenair.com • U.S. CAGE code 06324 • Rectangular Accessories
Dimensions in Inches (millimeters) are subject to change without notice.

527-586

EMI Backshell, SIM AD 6 (Two Modules)

- Band-Master ATS Shield Termination
- Qwik-Ty Strain Relief

527-586

This split EMI banding backshell fits SIM AD 6 two-module connectors

Split, snap-together backshell attaches to connector with spring clip. Cable shields attach to backshell with .12 inch (3.0 mm) wide ***Band-Master ATS***® Micro band strap. Composite thermoplastic with passivated stainless steel hardware and beryllium copper spring clip.

BAND OPTIONS

Terminate cable braid to backshell with optional band strap and banding tool. Pre-coiled bands are passivated stainless steel. Micro Slim bands have reduced thickness for weight reduction.

Band Type and Width	Hand Tool	Pneumatic Tool
Micro: .12 (3.0)	601-101	601-107
Micro Slim: .12 (3.0)	601-122	601-123

PART NUMBER

Sample PN➜	527-586	XM	B

Base P/N	527-586	
Finish	XM	Electroless Nickel
	XW	Olive Drab Cadmium
Bands	*Omit*	No Band
	B	Micro Band Included (qty. 2)
	J	Micro Slim Band Included (qty. 2)

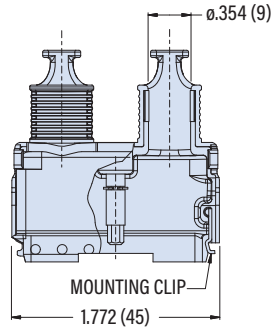

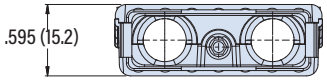

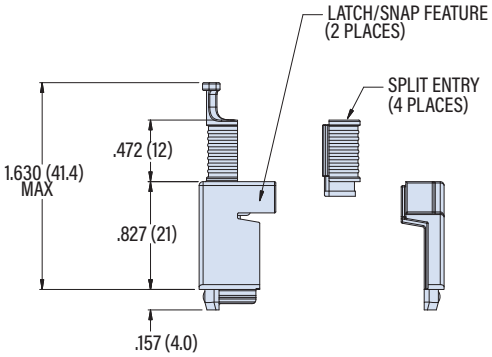

527-407

Clampshell, EN4165, BACC65BU/CA

■ Nickel-Plated Composite

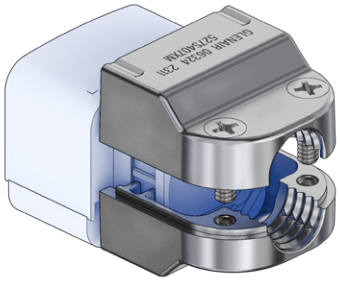

527-407

This clampshell fits EN4165 and BACC65BU/CA single-module connectors

Available in straight, 45° and 90° versions. Compression-type strain relief features anti-rotation detents. Nickel-plated composite thermoplastic with stainless steel screws.

PART NUMBER

Entry Style	Entry Location	Part No.
Straight	N/A	**527S407XM**
90°	Left or Right	**527A407XM**
	Top or Bottom	**527C407XM**
45°	Left or Right	**527B407XM**
	Top or Bottom	**527D407XM**

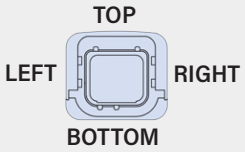

MATING FACE OF EN4165M61AN PLUG

527S407XM (STRAIGHT ENTRY)

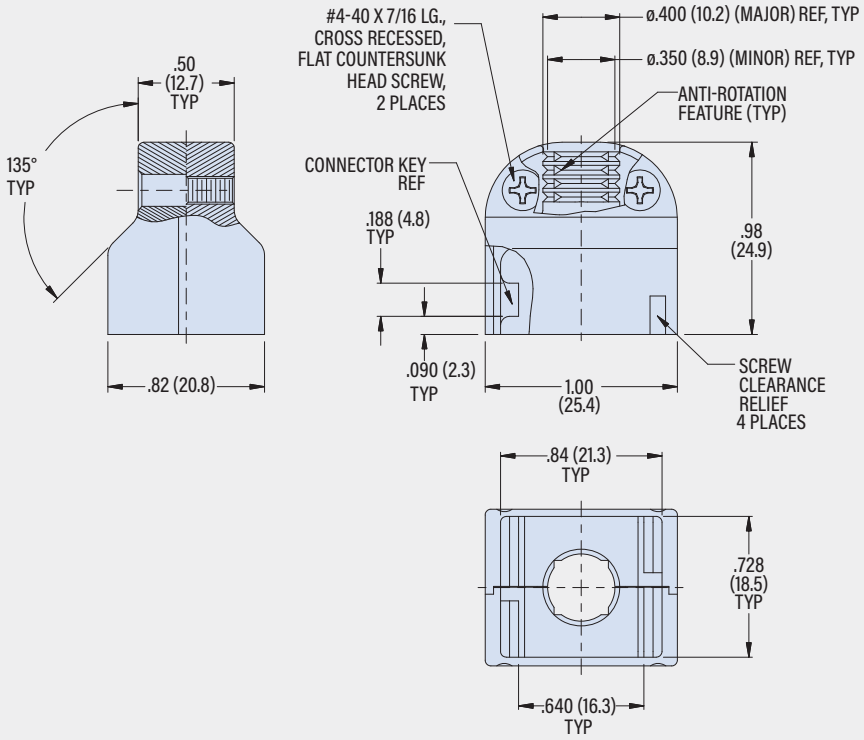

527A407XM (90° ENTRY)

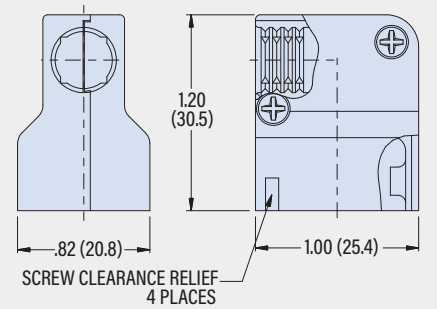

527C407XM (90° ENTRY)

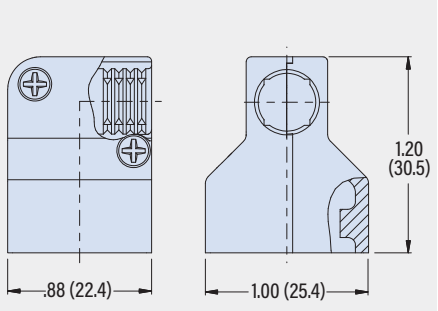

527B407XM (45° ENTRY)

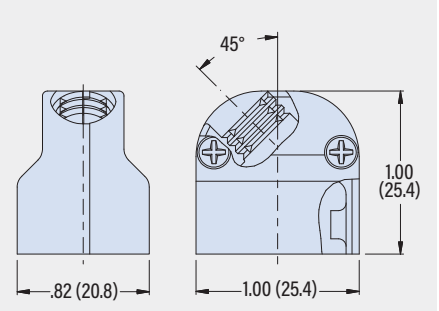

527D407XM (45° ENTRY)

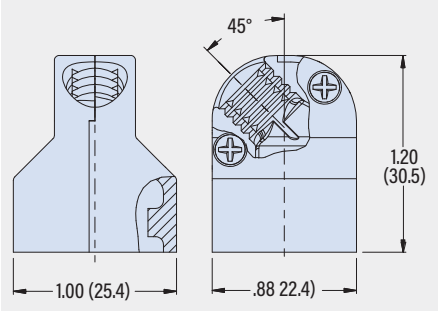

© 2024 Glenair, Inc • 1211 Air Way, Glendale, CA 91201 • 818-247-6000 • www.glenair.com • U.S. CAGE code 06324 • Rectangular Accessories
Dimensions in Inches (millimeters) are subject to change without notice.

527-493

Clampshell, EN4165, Extended Length

- Nickel-Plated Composite
- For EN4165 Fiber Optic Modules

527-493

Extended-length clampshell fits EN4165 single-module fiber optic connectors

Available in straight, 45° and 90° versions. Compression-type strain relief features anti-rotation detents. Nickel-plated composite thermoplastic with stainless steel screws.

PART NUMBER

Entry Style	Entry Location	Part No.
Straight	N/A	527S493XM
90°	Left or Right	527A493XM
	Top or Bottom	527C493XM
45°	Left or Right	527B493XM
	Top or Bottom	527D493XM

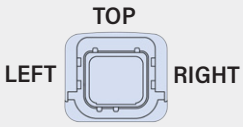

MATING FACE OF EN4165M61AN PLUG

527S493XM (STRAIGHT ENTRY)

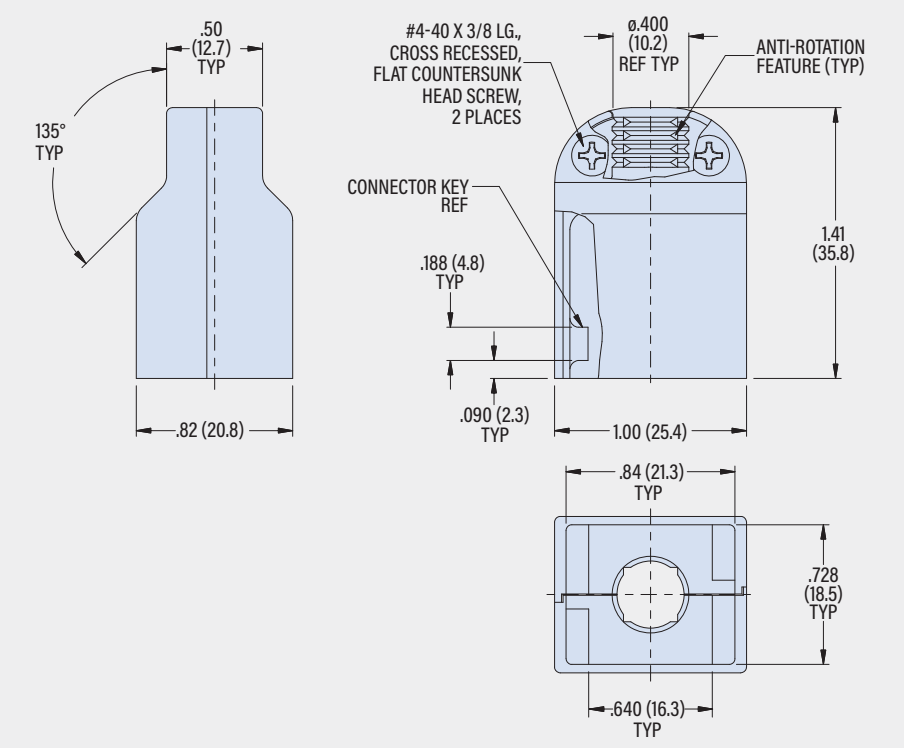

527A493XM (90° ENTRY)

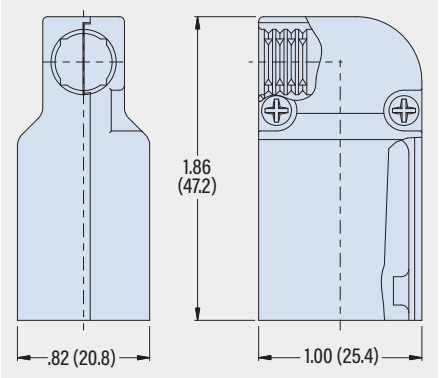

527C493XM (90° ENTRY)

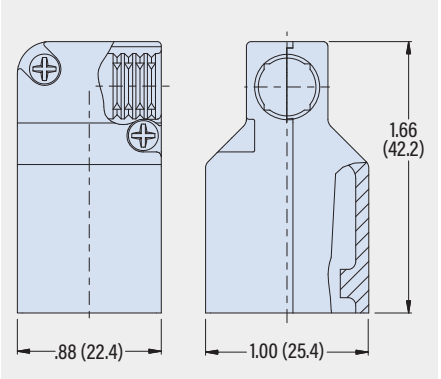

527B493XM (45° ENTRY)

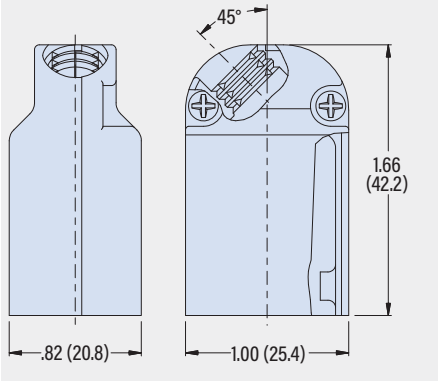

527D493XM (45° ENTRY)

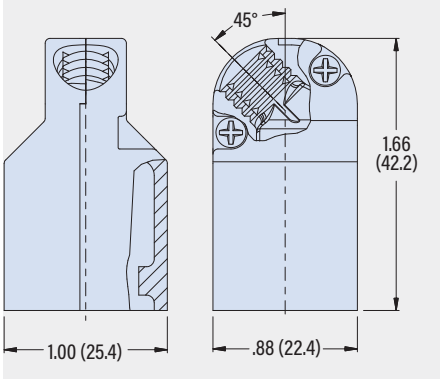

© 2024 Glenair, Inc • 1211 Air Way, Glendale, CA 91201 • 818-247-6000 • www.glenair.com • U.S. CAGE code 06324 • Rectangular Accessories
Dimensions in Inches (millimeters) are subject to change without notice.

DPX / AS81659
BACKSHELLS
FOR ARINC 404
RACK-AND-PANEL
CONNECTORS

Backshells

Complete DPX / AS81659 backshell capability: solid, split-shell, environmental, non-environmental, EMI/RFI, strain relief and more.

AS 81659 split-shell EMI backshell with Qwik-Ty strain relief

Line Replaceable Units (LRUs) are incorporated into avionic racks in commercial and military aircraft. Installation and maintenance of avionic equipment is facilitated through the use of rack-and-panel connectors which mate and demate without the use of mechanical coupling. On the cable side, these rack-and-panel connectors are equipped with backshell accessories to address common environmental, electrical, and mechanical stress problems which can damage cables and cable-to-connector terminations. Glenair supplies the complete range of DPX / AS81659 (ARINC 404) connector accessories and backshells for cable strain relief, environmental sealing, and EMI/RFI shield termination.

Glenair Signature Series AS81659 / DPX Backshells

Glenair signature DPX backshell with integrated EMI/RFI band porch

Glenair signature DPX strain-relief backshell with split-shell construction

AS81659 / DPX Backshell Selection Guide

AS81659 Strain Reliefs

ASS81659 Saddle Clamp Backshell
507-001
Page F-2

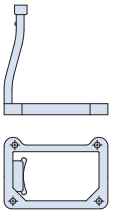

AS81659 Qwik-Ty Strain Relief
507-002
Page F-3

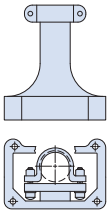

AS81659 Saddle Clamp Strain Relief
507-249
Page F-4

AS81659 EMI Backshells

AS81659 EMI Banding Backshell
507-011
Page F-5

AS81659 EMI TAG Ring Backshell
507-059
Page F-6

AS81659 EMI M25 Backshell
507-117
Page F-7

AS81659 EMI Cone-and-Ring Backshell
527-083
Page F-8

AS81659 EMI Banding Split Composite Backshell
527-476
Page F-9

DPX EMI Backshells

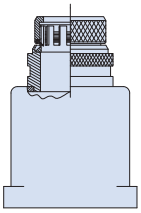

DPX2 EMI TAG Ring Backshell
527-070
Page F-10

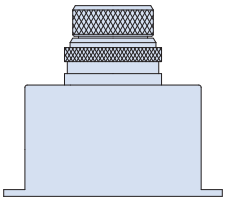

DPX4 EMI TAG Ring Backshell
527-142
Page F-11

507-001

Backshell, AS81659, Split, Saddle Clamp

- For unshielded wire bundles

507-001

This split, saddle-clamp backshell fits AS81659 connectors

Saddle clamp strain relief. Aluminum with stainless steel hardware.

PART NUMBER

Sample PN➔	**507-001**	**-M**	**-H**

Base P/N	**507-001**	
Finish	**-M**	Electroless Nickel
	-TZ	Zin-Zinc
	-NF	Olive Drab Cadmium
Mounting Hardware	***Omit***	No Hardware
	-H	Hardware Included *(4) #2-56 screws and (4) lockwashers*

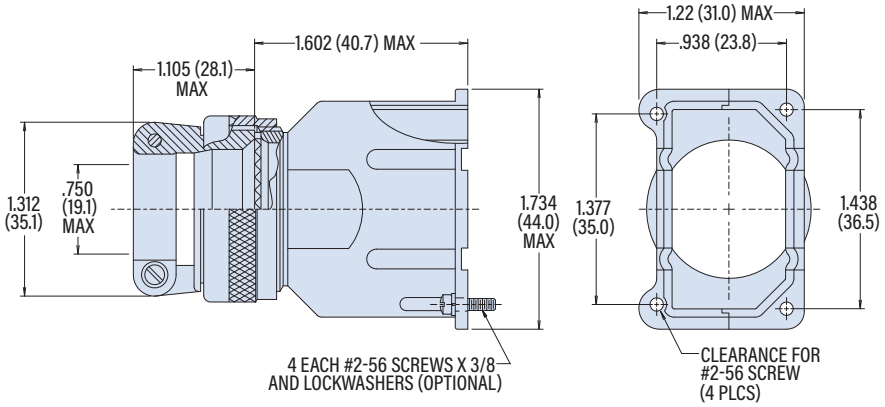

© 2024 Glenair, Inc • 1211 Air Way, Glendale, CA 91201 • 818-247-6000 • www.glenair.com • U.S. CAGE code 06324 • Rectangular Accessories
Dimensions in Inches (millimeters) are subject to change without notice.

507-002

Qwik-Ty, AS81659

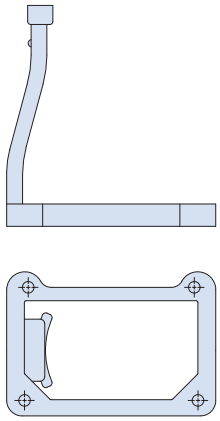

507-002

This Qwik-Ty strain relief fits AS81659 connectors

Black anodized aluminum with stainless steel hardware.

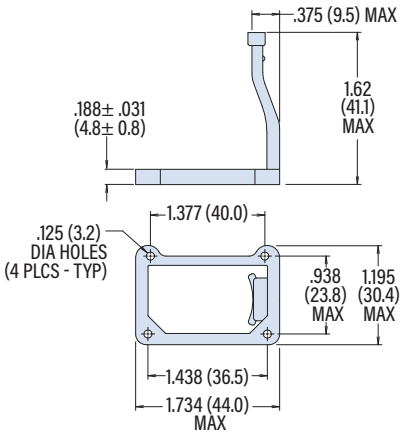

PART NUMBER

Sample PN➜ **507-002** | **L** | **H**

Base P/N	**507-002**	
Mounting	**A**	Angle Mount Right
	B	Back Mount
	C	Angle Mount Left
	D	90° Back Mount
	L	Left Mount
	R	Right Mount
Mounting Hardware	***Omit***	No Hardware
	H	Hardware Included *(4) #2-56 screws and (4) lockwashers*

507-002A
ANGLE MOUNT RIGHT

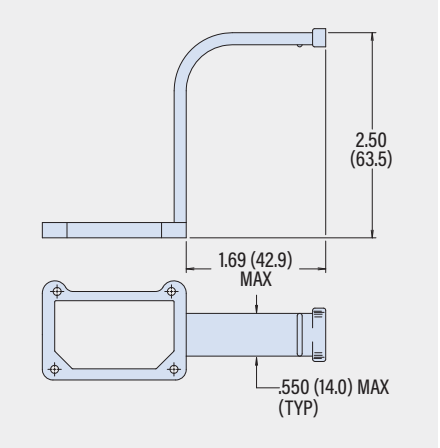

507-002C
ANGLE MOUNT LEFT

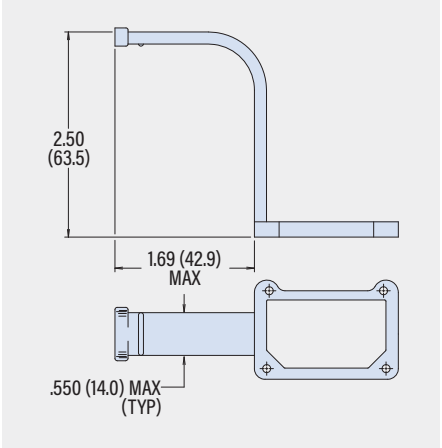

507-002D
90° BACK MOUNT

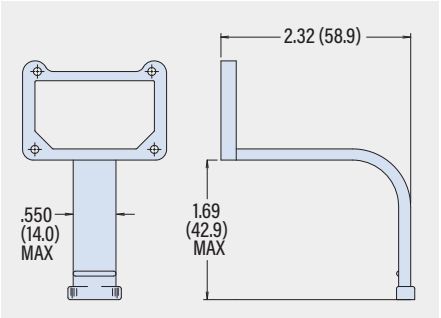

507-002B
BACK MOUNT

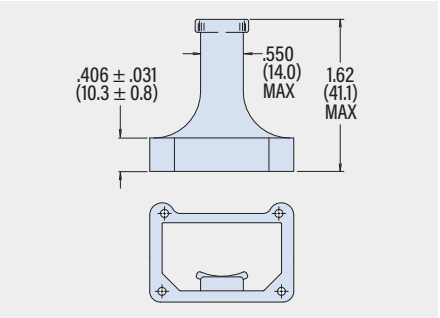

507-002L
LEFT MOUNT

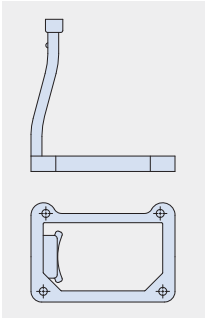

507-002R
RIGHT MOUNT

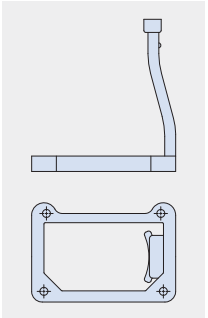

507-249

Saddle Clamp Strain Relief, AS81659

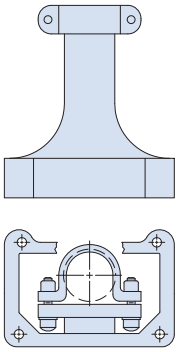

507-249

Saddle-clamp backshell fits AS81659 connectors

Available in three mounting styles. *Aluminum with stainless steel screws and washers. Captivated nut is silver-plated SST.*

PART NUMBER

Sample PN➜ **507-249 M B H**

Base P/N	**507-249**	
Finish	**M**	Electroless Nickel
	JF	Cadmium with Yellow Chromate
	TZ	Tin-Zinc
	NF	Olive Drab Cadmium
Mounting	**A**	Angle Mount Left
	B	Back Mount
	C	Angle Mount Right
Mounting Hardware	***Omit***	No Hardware
	H	Hardware Included *(4) #2-56 screws and (4) lockwashers*

507-249*B BACK MOUNT

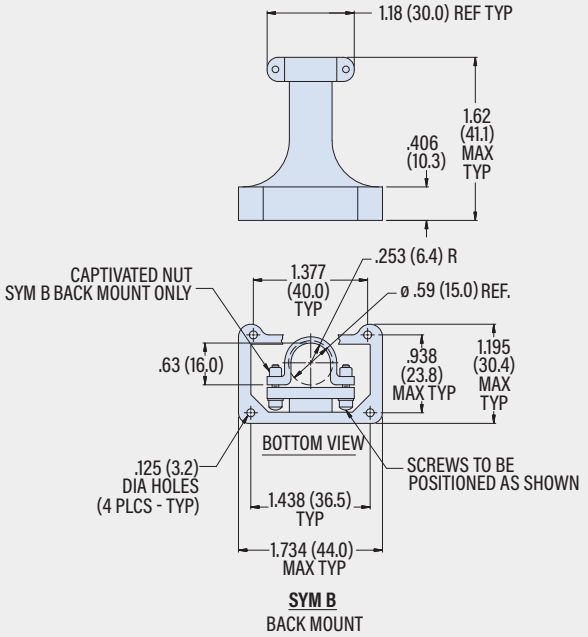

507-249*A AND C ANGLE MOUNT LEFT AND RIGHT

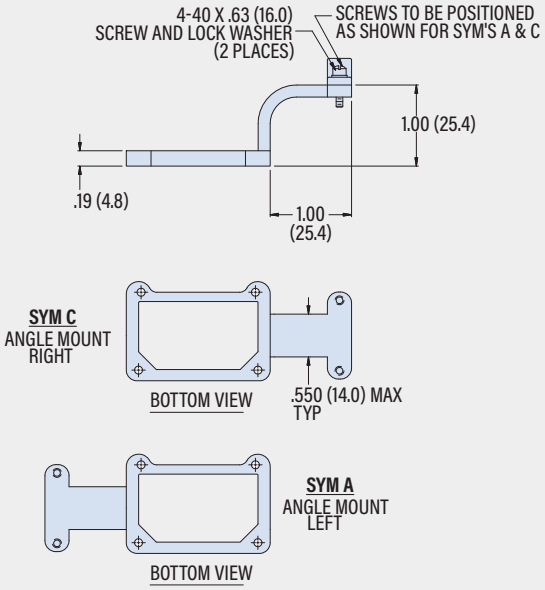

MOUNTING HARDWARE "H" OPTION

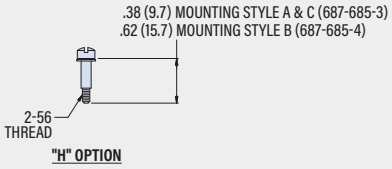

© 2024 Glenair, Inc • 1211 Air Way, Glendale, CA 91201 • 818-247-6000 • www.glenair.com • U.S. CAGE code 06324 • Rectangular Accessories
Dimensions in Inches (millimeters) are subject to change without notice.

507-011

Backshell, EMI Banding, AS81659

507-011

EMI banding backshell fits AS81659 connectors

Available with one or two ports. Terminate cable braid shield to backshell with ***Band-Master ATS®*** banding strap. Backshell includes RFI gasket and four #2-56 mounting screws and lockwashers.

Aluminum with stainless steel hardware and aluminum mesh/neoprene gasket.

PART NUMBER

		Sample PN➜	507-011	M	04T	03B	J

Base P/N	507-011	
Finish	M	Electroless Nickel
	TZ	Tin-Zinc
	NF	Olive Drab Cadmium
Port 1 Entry Size	01 02 03 04 05	*See Table 1*
Port 1 Entry Location	B F L R T	*See Drawing*
Port 2 Entry Size	*Omit*	Port 2 Deleted
	01 02 03 04 05	*See Table 1*
Port 2 Entry Location	*Omit*	Port 2 Deleted
	B F L R T	*See Drawing*
Band	*Omit*	No Band
	K	Standard Band Included (one per port)
	J	Slim Standard Band Included (one per port)

TABLE 1 ENTRY SIZE

Entry Size	ø A Min in	ø A Min mm	ø B in	ø B mm	ø C Max in	ø C Max mm
01	.250	6.4	.375	9.5	.425	10.8
02	.375	9.5	.500	12.7	.550	14.0
03	.500	12.7	.625	15.9	.675	17.1
04(1)	.625	15.9	.750	19.1	.800	20.3
05(1)	.750	19.1	.875	22.2	.925	23.5

(1) Entry Sizes 04 and 05 not available for entry locations L and R

BAND OPTIONS

Terminate cable braid to backshell with optional band strap and banding tool. Pre-coiled bands are passivated stainless steel. Slim Standard bands have reduced thickness for weight reduction.

Band Type and Width	Hand Tool	Pneumatic Tool
Standard: .24 (6.1)	601-100	601-106
Slim Standard: .24 (6.1)	601-109	601-110

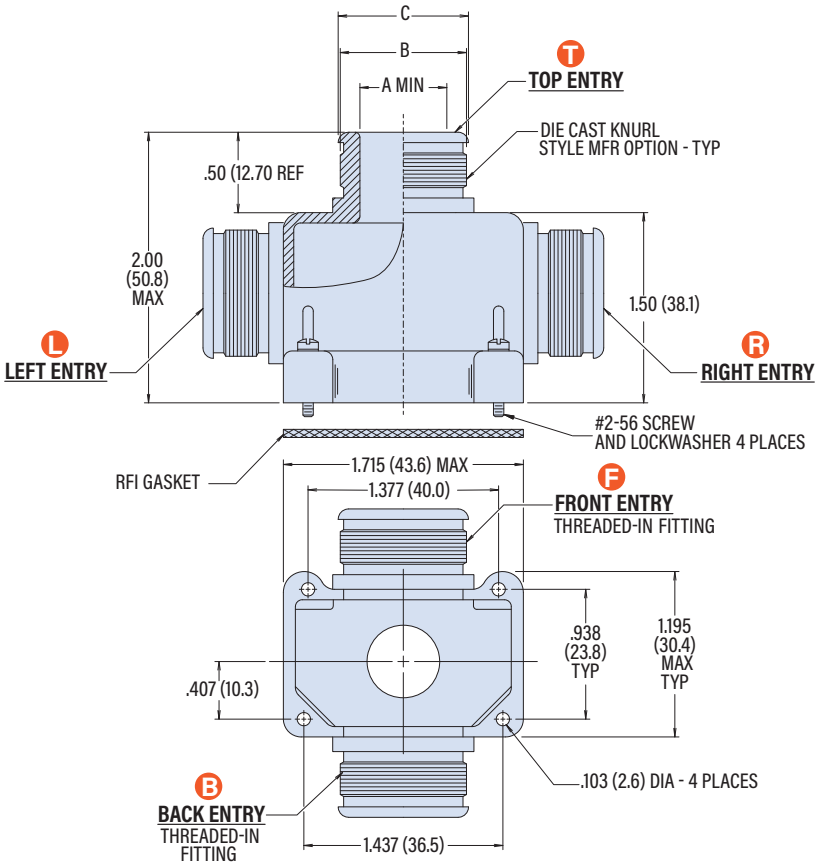

507-059

Backshell, EMI TAG Ring®, AS81659

507-059

EMI TAG Ring® backshell fits AS81659 connectors

Backshell has slotted ring, gold-plated ground spring and PTFE friction washer for terminating individual wire shields. Two strain relief options: saddle clamp or nut. *Nut requires shrink boot for cable strain relief.*

Aluminum with stainless steel hardware. Gold-plated beryllium copper ground spring, Teflon friction washer.

TAG® RING

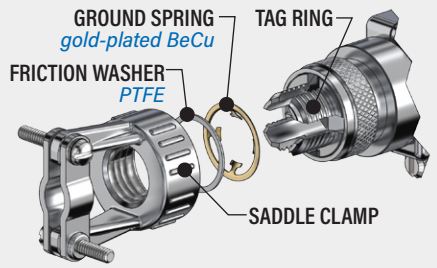

PART NUMBER

Sample PN➜ **507-059 NF 04 L**

Base P/N	507-059	
Finish	M	Electroless Nickel
	TZ	Tin-Zinc
	NF	Olive Drab Cadmium
Entry Size	02 03 04 05 06	*See Table 1*
Strain Relief	L	Saddle Clamp
	G	Nut
Entry Location	*Omit*	Top Entry
	L	Left Side
	R	Right Side

TABLE 1 ENTRY SIZE

Entry Size	ø E in	ø E mm	ø F Max in	ø F Max mm	ø G Max in	ø G Max mm	J Max in	J Max mm	Cable Range Min in	Cable Range Min mm	Cable Range Max in	Cable Range Max mm
02	.25	6.4	.55	14.0	.69	17.5	.97	24.6	.125	3.2	.250	6.4
03	.37	9.4	.67	17.0	.79	20.1	1.05	26.7	.250	6.4	.375	9.5
04	.50	12.7	.80	20.3	.92	23.4	1.16	29.5	.250	6.4	.500	12.7
05	.62	15.7	.92	23.4	1.04	26.4	1.22	31.0	.375	9.5	.625	15.9
06	.75	19.1	1.05	26.7	1.17	29.7	1.34	34.0	.500	12.7	.750	19.1

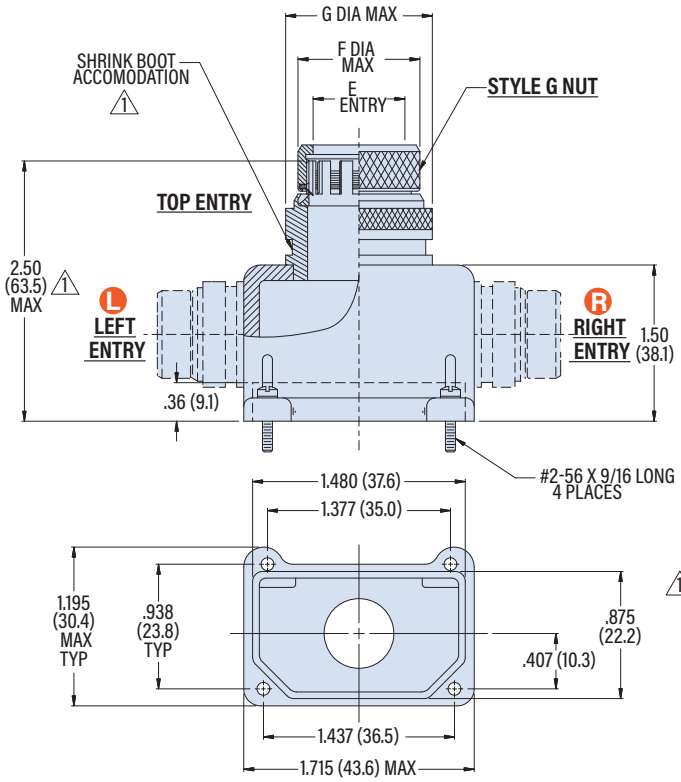

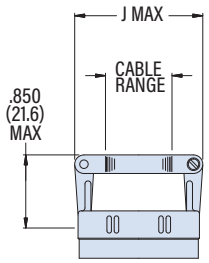

1 STYLE L SADDLE CLAMP

1 STYLE "L" STRAIN RELIEF WILL BE SUPPLIED LESS SHRINK BOOT ACCOMMODATION AND 2.50 MAX HEIGHT WILL BE 2.36 MAX.

© 2024 Glenair, Inc • 1211 Air Way, Glendale, CA 91201 • 818-247-6000 • www.glenair.com • U.S. CAGE code 06324 • Rectangular Accessories
Dimensions in Inches (millimeters) are subject to change without notice.

507-117

Backshell, EMI, AS81659, M25 Thread

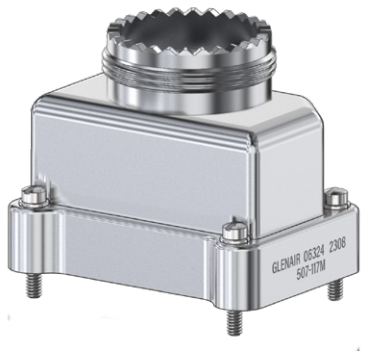

507-117

EMI backshell with M25 thread fits AS81659 connectors

Backshell has M25 thread and interface teeth compatible with Adapter Code H (D38999 Series III/IV) size 17 fittings.

Aluminum with stainless steel hardware.

PART NUMBER

Sample PN➔	507-117	NF
Base P/N	507-117	
Finish	M	Electroless Nickel
	JF	Cadmium with Yellow Chromate
	TZ	Tin-Zinc
	NF	Olive Drab Cadmium

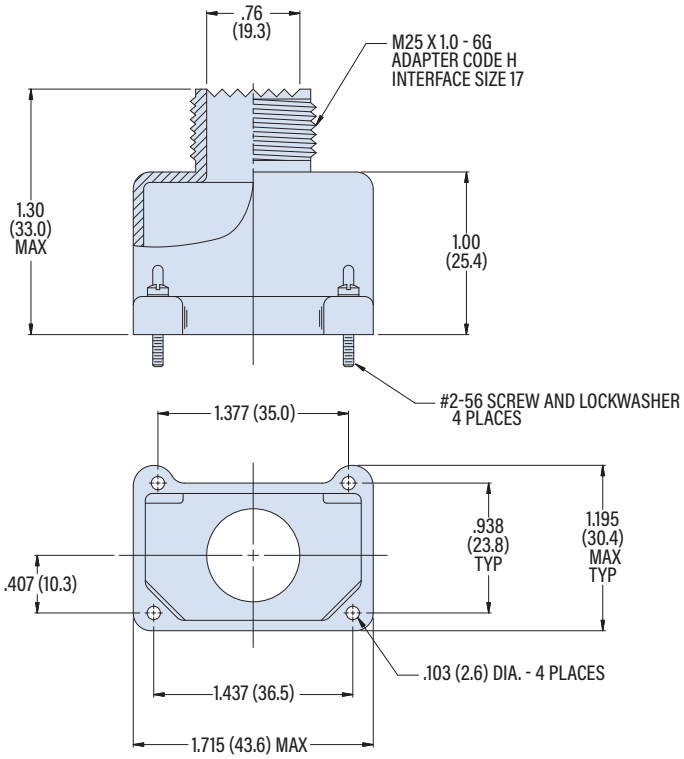

527-083

Backshell, EMI Cone-and-Ring, AS81659

527-083

EMI Cone-and-Ring split backshell fits AS81659 connectors

Cone-and-ring shield termination.

Aluminum with stainless steel hardware, gasket is aluminum mesh embedded in neoprene.

PART NUMBER

	527-083	-05	NF	R	S	A
Sample PN➜						

Base P/N	527-083	
Entry Size	-02 -03 -04 -05 -06 -07 -08 *See Table 1*	
Finish	M	Electroless Nickel
	JF	Cadmium with Yellow Chromate
	TZ	Tin-Zinc
	NF	Olive Drab Cadmium
EMI Gasket	*Omit*	None
	R	EMI Gasket Included
Shield Type	*Omit*	Overall Braid Shield
	S	Individual Braid Shields
Mounting Screws	*Omit*	None
	A	Socket Head Screws
	H	Fillister Head Screws
	CA	Captivated Socket Head Screws
	CH	Captivated Fillister Head Screws

CONE-AND-RING

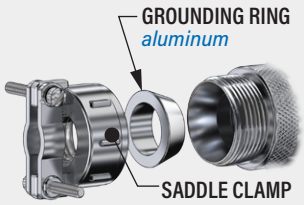

TABLE 1 ENTRY SIZE

Entry Size	A Max in	A Max mm	Cable Range Min in	Cable Range Min mm	Cable Range Max in	Cable Range Max mm
-02	.968	24.6	.125	3.2	.250	6.4
-03	1.046	26.6	.250	6.4	.375	9.5
-04	1.156	29.4	.312	7.9	.500	12.7
-05	1.218	30.9	.438	11.1	.625	15.9
-06	1.343	34.1	.562	14.3	.750	19.1
-07	1.468	37.3	.687	17.4	.875	22.2
-08	1.593	40.5	.812	20.6	1.000	25.4

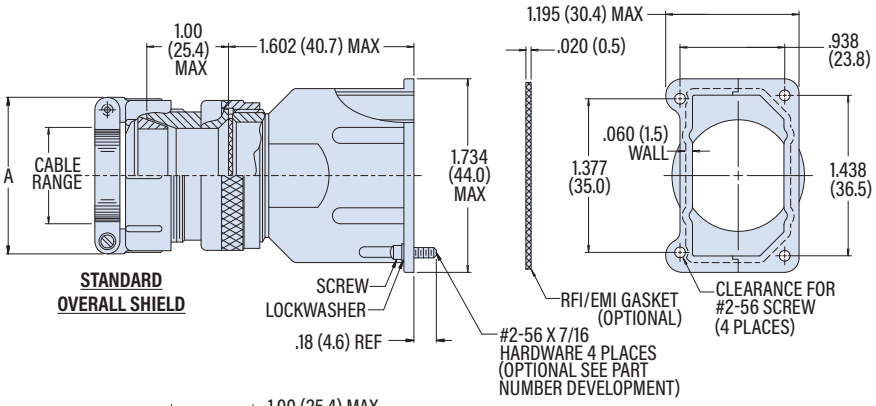

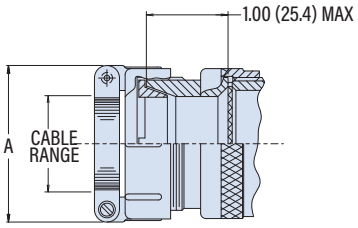

S = SINGLE INDIVIDUAL SHIELDS

© 2024 Glenair, Inc • 1211 Air Way, Glendale, CA 91201 • 818-247-6000 • www.glenair.com • U.S. CAGE code 06324 • Rectangular Accessories
Dimensions in Inches (millimeters) are subject to change without notice.

527-476

Backshell, EMI Banding, AS81659/ DPXB

- Composite Split
- Band-Master ATS Shield Termination

527-476

Split EMI backshell fits AS81659 connectors

Lightweight composite material. Terminate cable braid shield to backshell with ***Band-Master ATS®*** banding strap. Options include slots for individual wire shields and Qwik-Ty arm .

Thermoplastic with stainless steel hardware and aluminum mesh/neoprene gasket.

FIGURE 1
POLYSULFIDE OPTION

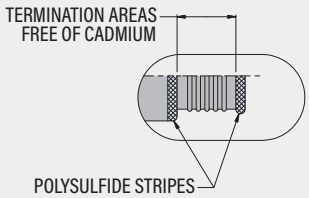

POLYSULFIDE OPTION IS AVAILABLE FOR FINISH CODE XW ONLY

PART NUMBER

Sample PN➜ **527-476 XM S T K G**

Base P/N	527-476	
Finish	XM	Electroless Nickel
	XW	Olive Drab Cadmium
Connector Code	*Omit*	All AS81659 Connectors except for Connector Code P1. Backshell Replaces Insert Retainer Plates.
	P1	DPX**E and Class E Environmental Connectors with Interfacial and Grommet Seal. Backshell Installs on Insert Retainer Plates.
Slot Option	*Omit*	None
	S	Slots Included
Qwik-Ty Option	*Omit*	None
	T	Qwik-Ty Strain Relief Arm Included
Band Option	*Omit*	No Band
	K	Standard Band Included
	J	Slim Standard Band Included
Polysulfide Option	*Omit*	None
	P	Polysulfide Stripes *(Finish Code XW Only, fig. 1)*
EMI Gasket	*Omit*	None
	G	EMI Gasket Included

BAND OPTIONS

Terminate cable braid to backshell with optional band strap and banding tool. Pre-coiled bands are passivated stainless steel. Slim Standard bands have reduced thickness for weight reduction.

Band Type and Width	Hand Tool	Pneumatic Tool
Standard: .24 (6.1)	601-100	601-106
Slim Standard: .24 (6.1)	601-109	601-110

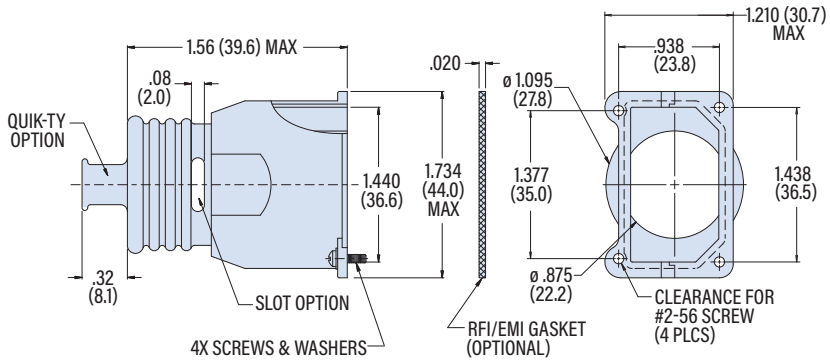

527-070

Backshell, EMI TAG Ring, DPX2

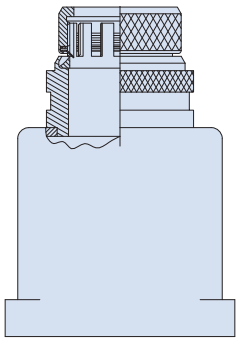

527-070

EMI TAG Ring® backshell fits DPX2 connectors

Fits ITT Cannon DPX2 connectors. Backshell has slotted ring, gold-plated ground spring and Teflon friction washer for terminating individual wire shields. Two strain relief options: saddle clamp or nut (*nut requires shrink boot for cable strain relief).*

Aluminum with stainless steel hardware. Gold-plated beryllium copper ground spring, Teflon friction washer.

TAG® RING

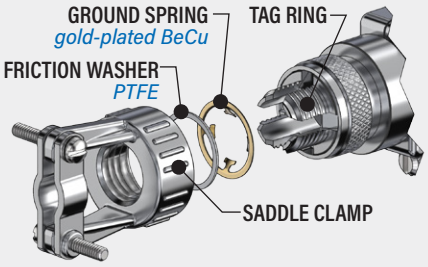

SHRINK BOOT

Optional lipped heatshrink boot fits .135 (3.4) wide boot groove. Type 1 high-performance semi-rigid elastomer resists fuels and oils and withstands temperature extremes. Operating temperature range -75 to +150 °C.

Part Number **770-001S108**

PART NUMBER

Sample PN➜ **527-070 M L S T**

Base P/N	**527-070**	
Finish	**M**	Electroless Nickel
	JF	Cadmium with Yellow Chromate
	TZ	Tin-Zinc
	NF	Olive Drab Cadmium
Strain Relief	*Omit*	Nut
	L	Saddle Clamp
Entry Location	*Omit*	Top Entry
	S	Side Entry
Shrink Boot	*Omit*	None
	T	Shrink Boot Included *(770-001S108)*

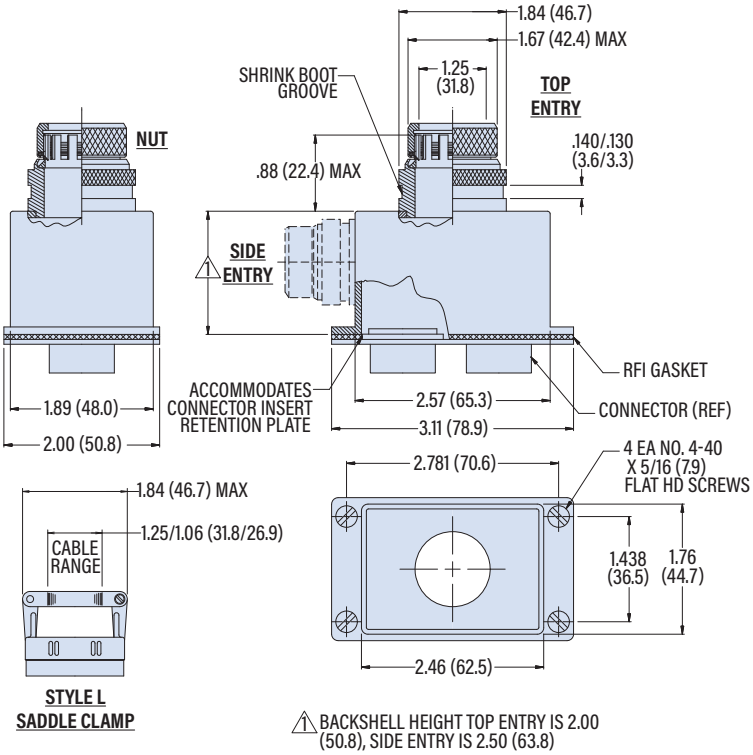

© 2024 Glenair, Inc • 1211 Air Way, Glendale, CA 91201 • 818-247-6000 • www.glenair.com • U.S. CAGE code 06324 • Rectangular Accessories
Dimensions in Inches (millimeters) are subject to change without notice.

527-142

Backshell, EMI TAG Ring, DPX4

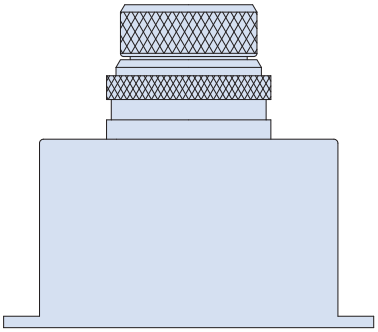

527-142

EMI TAG Ring® backshell fits DPX4 connectors

Fits ITT Cannon DPX4 connectors. Backshell has slotted ring, gold-plated ground spring and PTFE friction washer for terminating individual wire shields. Two strain relief options: saddle clamp or nut (*nut requires shrink boot for cable strain relief).*

Aluminum with stainless steel hardware. Gold-plated beryllium copper ground spring, PTFE friction washer.

TAG® RING

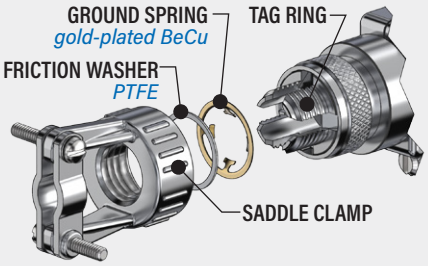

SHRINK BOOT

Optional lipped heatshrink boot fits .135 (3.4) wide boot groove. Type 1 high-performance semi-rigid elastomer resists fuels and oils and withstands temperature extremes. Operating temperature range -75 to +150 °C.

Part Number **770-001S108**

PART NUMBER

Sample PN➜ **527-142 M L S**

Base P/N	**527-142**	
Finish	**M**	Electroless Nickel
	JF	Cadmium with Yellow Chromate
	TZ	Tin-Zinc
	NF	Olive Drab Cadmium
Strain Relief	***Omit***	Nut
	L	Saddle Clamp
Entry Location	***Omit***	Top Entry
	S	Side Entry
Shrink Boot	***Omit***	None
	S	Shrink Boot Included *(770-001S108)*

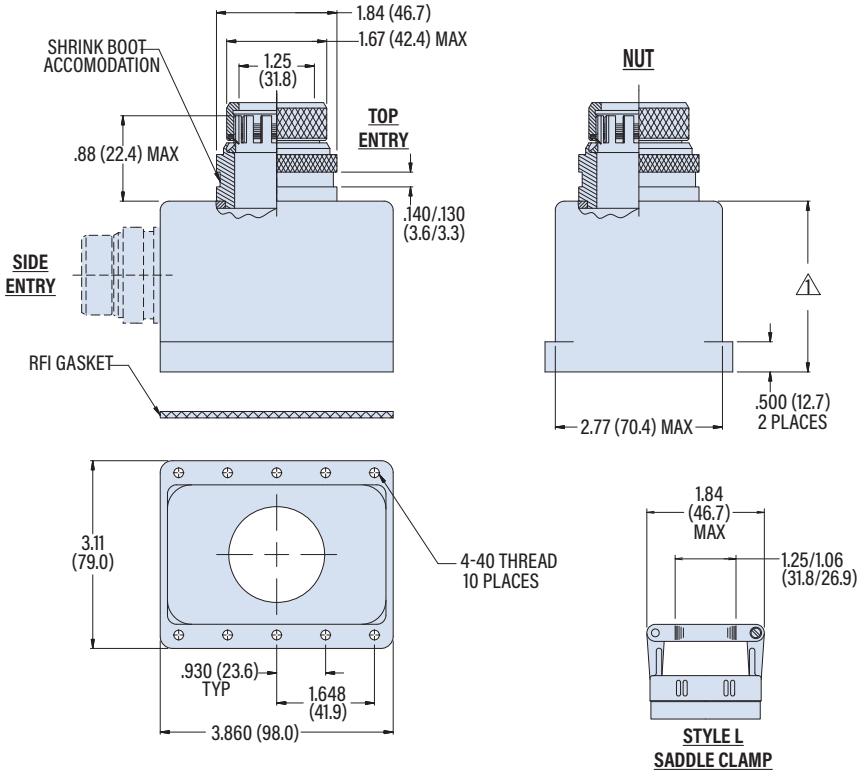

1 BACKSHELL HEIGHT TOP ENTRY IS 2.00 (50.8), SIDE ENTRY IS 2.50 (63.8)

M83733/DPK TYPE
BACKSHELLS,
STRAIN RELIEFS
AND ACCESSORIES

Cable strain relief and EMI/RFI shield termination backshells for M83733 / DPK connectors

MIL-C-83733 connectors are utilized in military aircraft applications and are subject to severe electrical, environmental, and mechanical stress. The cable side of these rack-and-panel connectors must be equipped with strain relief or cable shield termination backshells in accordance with DLA specifications. Glenair's split-shell backshells for MIL-C-83733 connectors are available in three designs which offer either a standard cable clamp, saddle-bar style strain-relief, or an EMI shield banding platform. Tongue-and-groove joints in the split-shell designs provide optimal electromagnetic compatibility. Backshells may be ordered with up to six cable entry locations for complete flexibility in wire and cable routing.

Glenair Signature Series M83733 Backshells

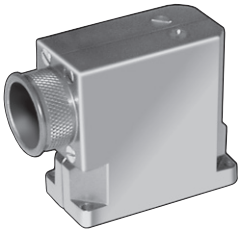

Glenair designs available with six cable entry locations

Light and medium-duty cable strain relief

M83733 / DPK Backshell Selection Guide

M83733 Strain Relief

Straight Clamp Strain Relief
507-013
Page G-2

M83733 EMI Backshells

Cone-and-Ring Backshell
501-001
Page G-3

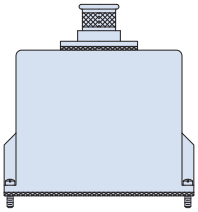

M83733 EMI Banding Backshell
507-078
Page G-4

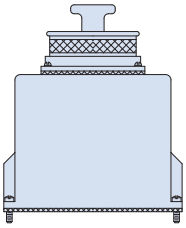

M83733 EMI Elliptical Banding Backshell
507-158
Page G-5

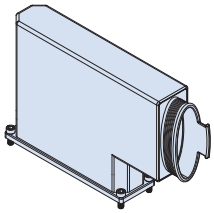

M83733 EMI Elliptical Banding Backshell
527-466
Page G-6

© 2024 Glenair, Inc • 1211 Air Way, Glendale, CA 91201 • 818-247-6000 • www.glenair.com • U.S. CAGE code 06324 • Rectangular Accessories
Dimensions in Inches (millimeters) are subject to change without notice.

507-013

Strain Relief, Straight Clamp, M83733

507-013

Straight clamp strain relief fits M83733 connectors

Fits ITT Cannon DPK and MIL-DTL-83733 connectors. Saddle bars have cushions to prevent damage to wire insulation.

Aluminum with stainless steel hardware, fluorosilicone cushions.

PART NUMBER

Sample PN➜	507-013	B	M

Base P/N	507-013
Shell Size	A B
Finish	*Omit* Olive Drab Cadmium TZ Tin-Zinc M Electroless Nickel

Shell Size	Connector Series	A ± .062 (1.57) in	A mm	C ± .005 (0.13) in	C mm
A	DPKA	2.437	61.9	1.895	48.1
B	DPKB / DPJM	3.750	95.3	3.195	81.2

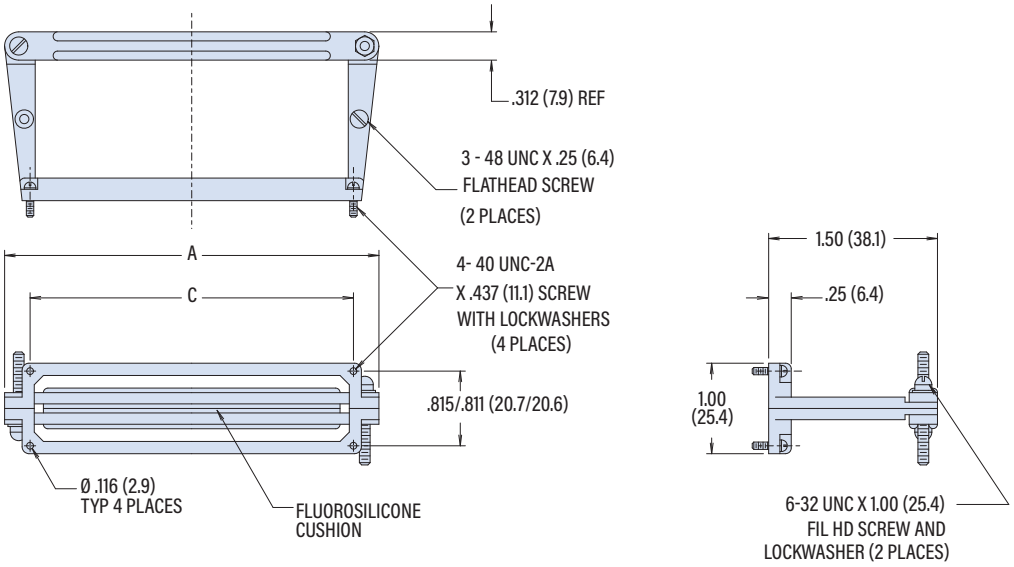

© 2024 Glenair, Inc • 1211 Air Way, Glendale, CA 91201 • 818-247-6000 • www.glenair.com • U.S. CAGE code 06324 • Rectangular Accessories
Dimensions in Inches (millimeters) are subject to change without notice.

501-001

Backshell, EMI Cone-and-Ring, M83733

501-001

EMI Cone-and-Ring backshell fits M83733 connectors

Fits ITT Cannon DPK and MIL-DTL-83733 connectors. Available with 1–3 ports located on top, ends or sides. Cone-and-ring shield termination.

Aluminum with stainless steel hardware.

CONE-AND-RING

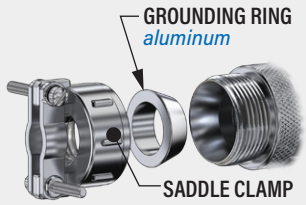

TABLE 1 ENTRY SIZE

Entry Size	Cable Range Min in	Cable Range Min mm	Cable Range Max in	Cable Range Max mm	M Max in	M Max mm
01	.062	1.6	.125	3.2	.781	19.8
02	.125	3.2	.250	6.4	.968	24.6
03	.250	6.4	.375	9.5	1.046	26.6
04	.312	7.9	.500	12.7	1.156	29.4
05	.437	11.1	.625	15.9	1.218	30.9
06	.562	14.3	.750	19.1	1.343	34.1
07	.687	17.4	.875	22.2	1.468	37.3

PART NUMBER

Sample PN➜ **501-001 NF B A06 B03 E03**

Base P/N	501-001	
Finish	M	Electroless Nickel
	TZ	Tin-Zinc
	NF	Olive Drab Cadmium
Shell Size	A	
	B	
Port 1 Location	A B C D E F	*See Drawing*
Port 1 Entry Size	01 02 03 04 05 06 07	*See Table 1*
Port 2 Location	A B C D E F	*See Drawing*
Port 2 Entry Size	01 02 03 04 05 06 07	*See Table 1*
Port 3 Location	A B C D E F	*See Drawing*
Port 3 Entry Size	01 02 03 04 05 06 07	*See Table 1*

Omit Ports 2-3 for single entry location. When Location "C" and/or "D" are selected, Location "B" cannot be selected. When "C" and "D" are both selected, the maximum entry size is "02".

Shell Size	A in	A mm	B in	B mm	C ± .005 (0.13) in	C ± .005 (0.13) mm
A	2.095	53.2	1.000	25.4	1.895	48.1
B	3.395	86.2	1.000	25.4	3.195	81.1

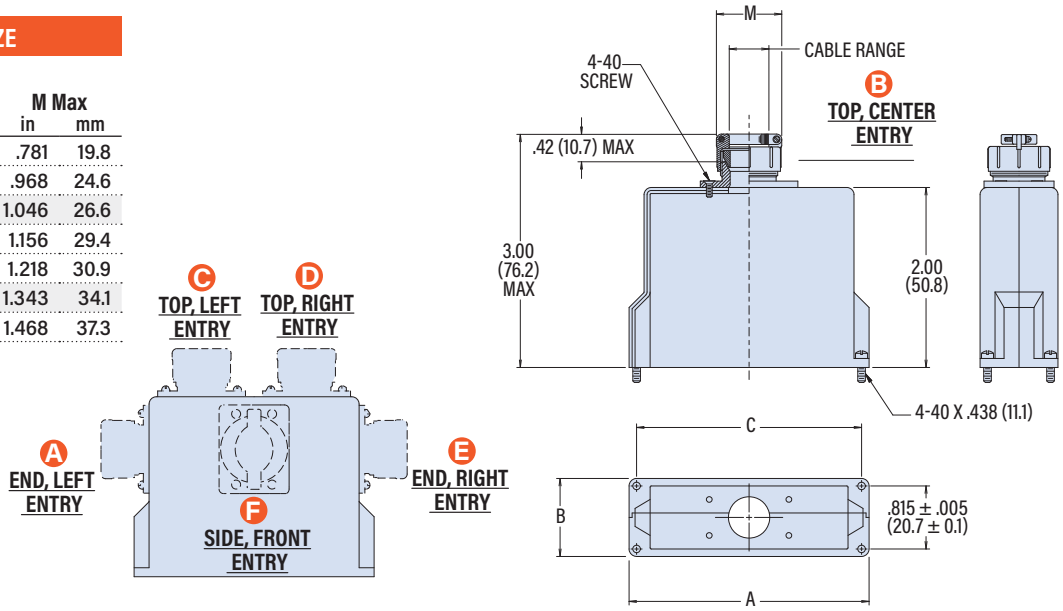

507-078

Backshell, EMI Banding, M83733

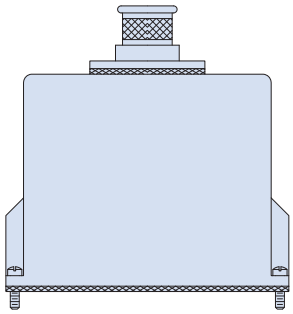

507-078

EMI banding backshell fits M83733 connectors

Fits ITT Cannon DPK and MIL-DTL-83733 connectors. Available with 1–3 ports located on top, end or side. Attach cable braid to backshell with ***Band-Master ATS***® banding strap. Backshell is supplied with three EMI gaskets: entry gasket, backshell/connector interface and connector/panel interface.

Aluminum with stainless steel hardware.
Backshell gaskets: metalastic.
Connector interface gasket: monel mesh.

PART NUMBER

Sample PN➜ **507-078 NF A A05 B04 E03 K**

Base P/N	507-078	
Finish	M	Electroless Nickel
	TZ	Tin-Zinc
	NF	Olive Drab Cadmium
Shell Size	A	
	B	
Port 1 Location	A B C D E F	*See Drawing*
Port 1 Entry Size	02 03 04 05 06 07	*See Table 1*
Omit Ports 2-3 for single entry location. When Location "C" and/or "D" are selected, Location "B" cannot be selected.		
Port 2 Location	A B C D E F	*See Drawing*
Port 2 Entry Size	02 03 04 05 06 07	*See Table 1*
Port 3 Location	A B C D E F	*See Drawing*
Port 3 Entry Size	02 03 04 05 06 07	*See Table 1*
Band Option	*Omit*	No Band
	K	Standard Band Included (1 per port)
	J	Slim Standard Band Included (1 per port)

TABLE 1 ENTRY SIZE

Entry Size	ø E in	ø E mm	ø F in	ø F mm	ø G in	ø G mm
02	.250	6.4	.375	9.5	.438	11.1
03	.375	9.5	.500	12.7	.562	14.3
04	.500	12.7	.625	15.9	.688	17.5
05	.625	15.9	.750	19.1	.812	20.6
06	.750	19.1	.875	22.2	.938	23.8
07*	.875	22.2	1.000	25.4	1.062	27.0

* Entry 07 available on entry location "F" only

Shell Size	A in	A mm	B in	B mm	C ± .005 (0.13) in	C ± .005 (0.13) mm
A	2.095	53.2	1.000	25.4	1.895	48.1
B	3.395	86.2	1.000	25.4	3.195	81.1

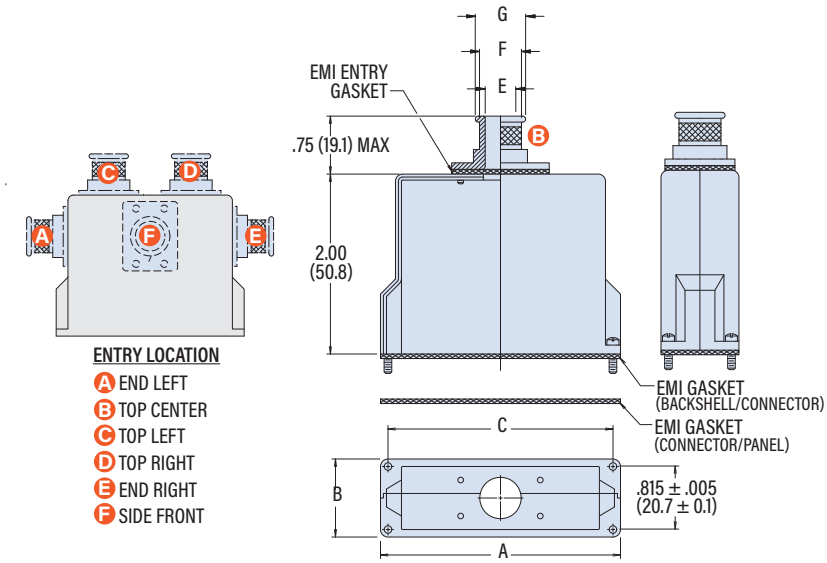

BAND OPTIONS

Terminate cable braid to backshell with optional band strap and banding tool. Pre-coiled bands are passivated stainless steel. Slim Standard bands have reduced thickness for weight reduction.

Band Type and Width	Hand Tool	Pneumatic Tool
Standard: .24 (6.1)	601-100	601-106
Slim Standard: .24 (6.1)	601-109	601-110

© 2024 Glenair, Inc • 1211 Air Way, Glendale, CA 91201 • 818-247-6000 • www.glenair.com • U.S. CAGE code 06324 • Rectangular Accessories
Dimensions in Inches (millimeters) are subject to change without notice.

507-158

Backshell, EMI Banding, Top Entry, M83733

- Elliptical Top Entry
- Band-Master ATS Shield Termination

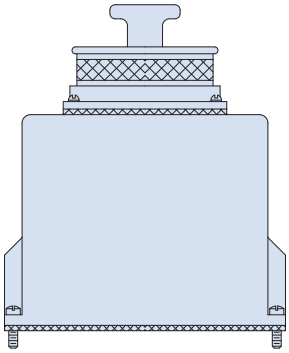

507-158

EMI banding backshell fits M83733 connectors

Fits ITT Cannon DPK and MIL-DTL-83733 connectors. Elliptical top entry accepts large wire bundles. Attach cable braid to backshell with ***Band-Master ATS***® banding strap. Attach cable tie (not supplied) to optional Qwik-Ty arm for cable strain relief. Backshell is supplied with three EMI gaskets: entry gasket, backshell/connector interface and connector/panel interface.

Aluminum with stainless steel hardware.
Backshell gaskets: metalastic.
Connector interface gasket: monel mesh.

BAND OPTIONS

Terminate cable braid to backshell with optional band strap and banding tool. Pre-coiled bands are passivated stainless steel. Slim Standard bands have reduced thickness for weight reduction.

Band Type and Width	Hand Tool	Pneumatic Tool
Standard: .24 (6.1)	601-100	601-106
Slim Standard: .24 (6.1)	601-109	601-110

PART NUMBER

Sample PN➜ **507-158 NF -B J**

Base P/N	507-158	
Finish	M	Electroless Nickel
	TZ	Tin-Zinc
	NF	Olive Drab Cadmium
Shell Size	-A	
	-B	
Qwik-Ty Option	*Omit*	None
	T	Qwik-Ty Included
Band	*Omit*	No Band
	K	Standard Band Included
	J	Slim Standard Band Included

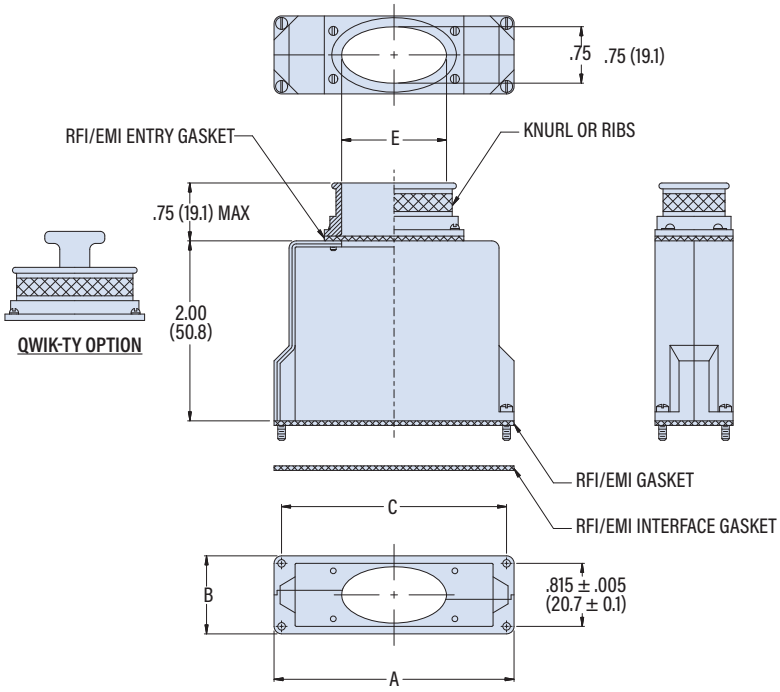

Shell Size	A in	A mm	B in	B mm	C ± .005 (0.13) in	C ± .005 (0.13) mm	ø E in	ø E mm
A	2.095	53.2	1.000	25.4	1.895	48.1	1.125	28.6
B	3.395	86.2	1.000	25.4	3.195	81.1	1.375	34.9

527-466

Backshell, EMI Banding, End Entry, DPKB

- Elliptical End Entry
- Band-Master ATS Shield Termination

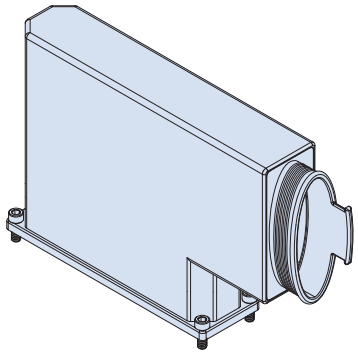

527-466

EMI banding backshell fits DPKB connectors

Fits ITT Cannon DPKB and MIL-DTL-83733 shell size B connectors. Elliptical end entry accepts large wire bundles. Attach cable braid to backshell with ***Band-Master ATS***® banding strap. Attach cable tie (not supplied) to optional Qwik-Ty arm for cable strain relief.

Aluminum with stainless steel hardware.

BAND OPTIONS

Terminate cable braid to backshell with optional band strap and banding tool. Pre-coiled bands are passivated stainless steel. Slim Standard bands have reduced thickness for weight reduction.

Band Type and Width	Hand Tool	Pneumatic Tool
Standard: .24 (6.1)	601-100	601-106
Slim Standard: .24 (6.1)	601-109	601-110

PART NUMBER

Sample PN➜ **527-466 NF B T K S**

Base P/N	527-466	
Finish	M	Electroless Nickel
	TZ	Tin-Zinc
	NF	Olive Drab Cadmium
Shell Size	B	
Qwik-Ty Option	*Omit*	None
	T	Qwik-Ty Included
Band Option	*Omit*	No Band
	K	Standard Band Included
	J	Slim Standard Band Included
Hardware Option	*Omit*	None
	S	#4-40 Mounting Screws and Lockwashers Included

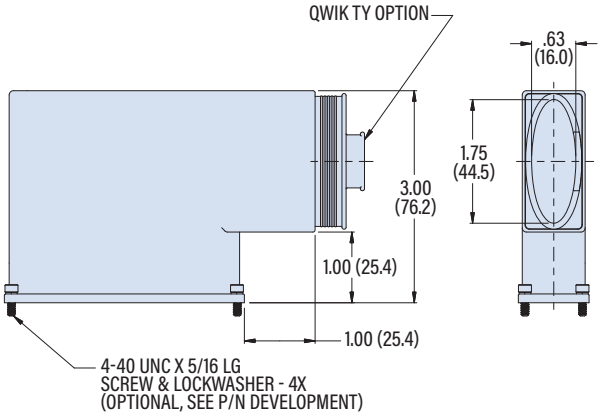

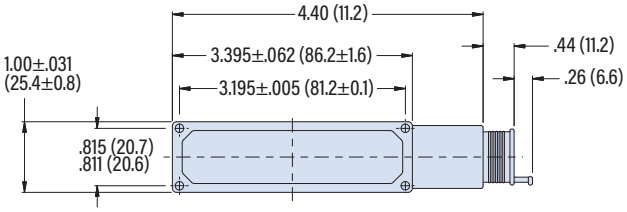

© 2024 Glenair, Inc • 1211 Air Way, Glendale, CA 91201 • 818-247-6000 • www.glenair.com • U.S. CAGE code 06324 • Rectangular Accessories
Dimensions in Inches (millimeters) are subject to change without notice.

Index

000-01-51-172 ..... B-10
000-01-51-173 ..... B-10
000-01-XX-132 ..... B-20
000-01-XX-162 ..... B-10
000-01-XX-163 ..... B-10
000-01-XX-164 ..... B-10
000-01-XX-165 ..... B-10
080-00-00-100 ..... B-16
080-00-00-101 ..... B-16
080-00-00-502 ..... B-14
080-00-00-503 ..... B-14
080-00-00-505 ..... B-14
080-00-00-506 ..... B-14
080-00-00-512 ..... B-14
080-00-00-513 ..... B-14
080-00-00-515 ..... B-14
080-00-00-516 ..... B-14
177-504 ..... B-17
177-505 ..... B-18
179-013-1H B-15
179-013-1S B-15
179-013-2H B-15
179-013-2S B-15
179-135 ..... B-21
179-162-1H B-15
179-162-1S B-15
179-162-2H B-15
179-162-2S B-15
179-221 ..... B-17
289-003 ..... A-4
289-004 ..... A-4
289-005 ..... A-64
289-007 ..... A-66
289-008 ..... A-68
289-015 ..... A-15
289-016 ..... A-15
289-019 ..... A-4
289-052 ..... A-8
289-062 ..... A-16
289-064 ..... A-14
289-085 ..... A-70
289-087 ..... A-71
289-181 ..... A-10
500-008 ..... A-5
500-010 ..... B-25
500-011 ..... B-27
500-012 ..... B-42
500-015 ..... B-19
500-016 ..... B-23
500-017 ..... B-5
500-024 ..... A-23
500-037 ..... B-9
500-047 ..... B-32
500-068 ..... A-23
500-069 ..... B-16
500-107 ..... B-7
500-147 ..... B-12
501-001 ..... G-3
507-001 ..... F-2
507-002 ..... F-3
507-011 ..... F-5
507-013 ..... G-2
507-035 ..... B-22
507-059 ..... F-6
507-078 ..... G-4
507-088 ..... B-29
507-117 ..... F-7
507-142 ..... B-31
507-145 ..... B-39
507-146 ..... B-44
507-158 ..... G-5
507-175 ..... B-33
507-178 ..... B-40
507-198 ..... B-45
507-249 ..... F-4
507-296 ..... B-35
507-297 ..... B-37
507-299 ..... B-46
527-025 ..... D-8
527-056 ..... D-5
527-070 ..... F-10
527-071 ..... D-9
527-083 ..... F-8
527-114 ..... D-14
527-126 ..... D-11
527-142 ..... F-11
527-149 ..... D-7
527-199 ..... D-12
527-216 ..... D-13
527-254 ..... E-6
527-257 ..... D-3
527-260 ..... E-2
527-265 ..... E-3
527-268 ..... E-7
527-281 ..... E-4
527-407 ..... E-12
527-410 ..... E-5
527-464 ..... D-10
527-466 ..... G-6
527-475 ..... D-6
527-476 ..... F-9
527-493 ..... E-13
527-495 ..... E-9
527-531 ..... E-8
527-542 ..... E-10
527-543 ..... D-15
527-586 ..... E-11
550-004 ..... A-24
550-005 ..... A-26
550-009 ..... A-28
550-039 ..... A-30
550-041 ..... A-32
550-100 ..... A-34
550-102 ..... A-36
550-186 ..... A-38
550-200 ..... A-11
557-071 ..... A-43
557-107 ..... A-56
557-110 ..... A-45
557-246 ..... A-47
557-281 ..... A-58
557-316 ..... A-49
557-319 ..... A-60
557-432 ..... A-51
557-467 ..... A-53
557-493 ..... A-13
557-538 ..... A-40
557-553 ..... A-54
557-561 ..... A-62
557-609 ..... A-42
557-666 ..... A-9
559-001 ..... A-15
559-002 ..... A-22
601-*** Intro-1
687-092 ..... A-17
687-152 ..... B-19
687-172 ..... A-19
687-236 ..... A-19
687-316 ..... A-21
687-345 ..... A-17
687-418 ..... A-19
687-439 ..... B-19
687-626 ..... A-19
687-695 ..... B-19
780-518 ..... A-7
780-555 ..... B-10
799-011 ..... C-13
799-013 ..... C-3
799-015 ..... C-15
799-016 ..... C-16
799-018 ..... C-5
799-019 ..... C-5
799-038 ..... C-7
799-039 ..... C-7
799-064 ..... C-4
799-065 ..... C-4
799-067 ..... C-9
799-117 ..... C-10
799-131 ..... C-18
799-164 ..... C-19
799-172 ..... C-12
799-176 ..... C-10
M83513/05-02 ..... B-14
M83513/05-03 ..... B-14
M83513/05-05 ..... B-14
M83513/05-06 ..... B-14
M83513/05-07 ..... B-16
M83513/05-12 ..... B-14
M83513/05-13 ..... B-14
M83513/05-15 ..... B-14
M83513/05-16 ..... B-14
M83513/05-17 ..... B-16

MISSION-CRITICAL

INTERCONNECT SOLUTIONS

Glenair, Inc.
1211 Air Way • Glendale, California • 91201-2497
Telephone: 818-247-6000 • Fax: 818-500-9912 • sales@glenair.com
www.glenair.com

Glenair East
20 Sterling Drive
Wallingford, CT
06492
Telephone:
203-741-1115
Facsimile:
203-741-0053
sales@glenair.com

Glenair UK Ltd
40 Lower Oakham Way
Oakham Business Park
Mansfield, Notts
NG18 5BY England
Telephone:
+44-1623-638100
Facsimile:
+44-1623-638111
sales@glenair.co.uk

Glenair Microway Systems
7000 North Lawndale Avenue
Lincolnwood, IL
60712
Telephone:
847-679-8833
Facsimile:
847-679-8849

Glenair Nordic AB
Gustav III:s Boulevard 42
SE-169 27 Solna
Sweden
Telephone:
+46-8-50550000
sales@glenair.se

Glenair GmbH
Schaberweg 28
61348 Bad Homburg
Germany
Telephone:
06172 / 68 16 0
Facsimile:
06172 / 68 16 90
info@glenair.de

Glenair Iberica S.L.
Av. De Manoteras, 24 – 2º
28050 Madrid
Spain
Telephone:
+34 915 562 687
sales@glenair.es

Glenair Italia S.p.A.
Via Del Lavoro, 7
40057 Quarto Inferiore –
Granarolo dell'Emilia
Bologna, Italy
Telephone:
+39-051-782811
Facsimile:
+39-051-782259
info@glenair.it

Glenair France SARL
7, Avenue Parmentier
Immeuble Central Parc #2
31200 Toulouse
France
Telephone:
+33-5-34-40-97-40
Facsimile:
+33-5-61-47-86-10
sales@glenair.fr

Glenair Korea
6-21Tapsil-ro 58beon-gil
Giheung-gu, Yongin-si
Gyeonggi-do
Republic of Korea
Telephone:
+82-07-5067-2437
Facsimile:
+82-504-375-4549
sales@glenair.kr

Glenair Japan
40F, Nagoya Lucent Tower,
6-1, Ushijima-cho,
Nishi-ku, Nagoya, 451-6040
Japan
Telephone:
+81-52-569-2521
Facsimile:
+81-52-569-2523
sales@glenair.jp

© 2023 Glenair, Inc.

Printed in U.S.A.

CAT-177 • May 2024