THIS DRAWING IS UNPUBLISHED | RELEASED FOR PUBLICATION -.- | © COPYRIGHT – By – | ALL RIGHTS RESERVED

METRIC

LOC	DIST
I	—

REVISIONS

F	LTR	DESCRIPTION	DATE	DWN	APVD
	B	ECR-15-006775	30APR2015	M.G.	M.G.

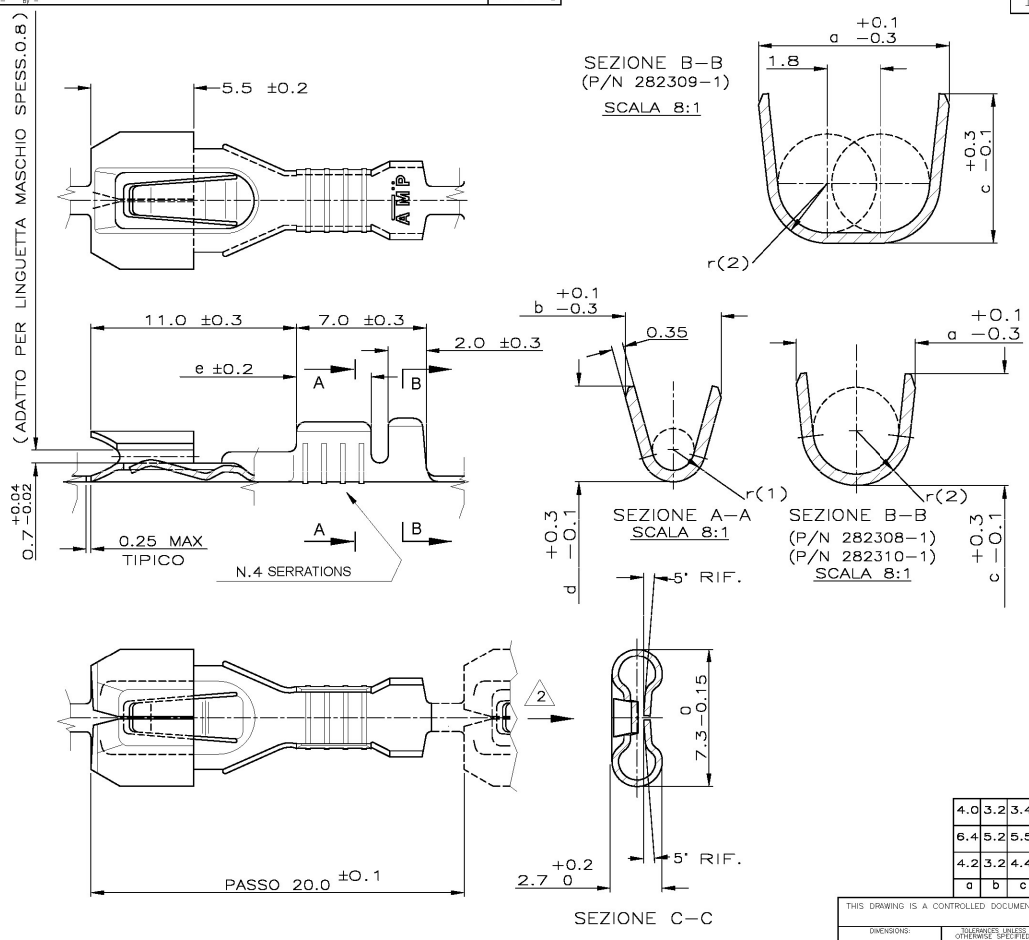

NOTE:

1) STATO DI FORNITURA: TERMINALI IN NASTRO AVVOLTO SU BOBINA DI CARTONE (BOBINA ØEST. 260x160 LARG.)

2 SENSO DI USCITA DELLA BOBINA

3

(WIRE) SEZ.FILO mm²	(INS.DIA.REDUCED) Ø IS.RID.FASE 3
0.50	1.5–1.7
0.75	1.7–1.9
1.0	1.9–2.1
1.5	2.2–2.4

4

(WIRE) SEZ.FILO mm²	(INS.DIA.STD) Ø ISOL.STD	(INS.DIA.REDUCED) Ø IS.RID.FASE 3
0.50	2.0–2.2	---
0.75	---	---
1.0	2.4–2.6	1.9–2.1
1.5	3.15–3.35	---

a	b	c	d	e	r(1)	r(2)	FINITURA / COLORE (FINISH / COLOUR)	MATERIALE (MATERIAL)	SEZ.CAVO WIRE RANGE mm²	NUMERO PART NUMBER
4.0	3.2	3.4	3.2	4	0.6	1.5	PRE–STAGNATO	BRONZO FOSFOROSO	0.5–1.5 (is.rid. FASE 3)	282310–1
6.4	5.2	5.5	4	3.5	1.1	1.6			1.0–1.0 (is.std.)	282309–1
4.2	3.2	4.4	3.2	4	0.6	1.5			0.5–1.5 (is.std.)	282308–1

THIS DRAWING IS A CONTROLLED DOCUMENT:

DIMENSIONS: mm

TOLERANCES UNLESS OTHERWISE SPECIFIED:
0 PLC ± –
1 PLC ± 0.3
2 PLC ± –
3 PLC ± –
4 PLC ± –
ANGLES ± 2°

MATERIAL –
FINISH –

DISEGNO PER CLIENTE SOLO PER RIFERIMENTO
CUSTOMER DWG. FOR REFERENCE ONLY

DIAM. ISOLANTE (INS. DIA. RANGE): VEDERE TABELLA
RANGO FILO (WIRE RANGE): VEDERE TABELLA

DWN G.IANNARELLI 16 APRILE 1992
CHK –
APVD –
PRODUCT SPEC –
APPLICATION SPEC 114-20058
WEIGHT –
CUSTOMER DRAWING

TE Connectivity

NAME: CONTATTO FEMMINA PER CONNETTORE PASSO 5mm ELASTICIZZATO (F55)

SIZE A3 | CAGE CODE 00779 | DRAWING NO C-282308 | RESTRICTED TO –
SCALE 5:1 | SHEET 1 OF 1 | REV B

282308

1471-9 (3/11)

Downloaded from Arrow.com.