samtec

ACCLIMATE™

ACR–22–03–G–00.25–S–S1–P–1

ACR-22 SERIES

IP68 SEALED 22 mm PANEL ASSEMBLY

SPECIFICATIONS

For complete specifications see www.samtec.com?ACR-22

Terminal Material:
Brass
Contact Material:
Brass/BeCu
Operating Temp Range:
-40 °C to +105 °C
Housing:
–P: Thermoplastic
–M: Zinc Alloy
RoHS Compliant:
Yes

CURRENT RATING		
LEAD STYLE	PINS POWERED	CCC per PIN
–01	30	2.0 A
–02	20	2.3 A
–03	8	8.3 A

For general reference only. See www.samtec.com?ACR-22 for complete test data or contact AccliMate@samtec.com for applications requiring higher current carrying capacity.

Mates with:
ACP-22, ACPK-22

Solutionator
DESIGN IN A MINUTE

- Easy sealed cable solutions
- Build a standard or flexible custom online
- Calculate performance, current rating, voltage drop
- Live chat with AccliMate™ engineers for custom options
- Variety of shells, pin sizes, signal, power, I/O interfaces
- Assembly and field kits available

DUST CAPS

- DCA-ACR-22-M-X (Metal)
- DCA-ACR-22-P-X (Plastic)

- Visit sealedio.samtec.com for a complete list of sealed systems

PANEL OPENING

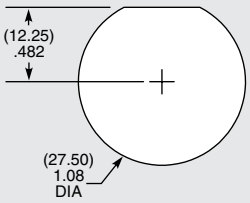

ALSO AVAILABLE
(MOQ Required)

- Other assembly lengths

Contact Samtec.

Note: Some lengths, styles and options are non-standard, non-returnable.

ACR – 22 – LEAD STYLE – PLATING – LENGTH – END 1 – END 2 – HOUSING MATERIAL – KEYING OPTIONS

–01
= 1.0 mm DIA (30) terminals or sockets (24 AWG)

–02
= 1.0 mm DIA (20) terminals or sockets (24 AWG)

–03
= 1.5 mm DIA (8) terminals or sockets (16 AWG)

–G
= 10 µ" (0.25 µm) Gold over 50 µ" (1.27 µm) Ni on contact

–"XX.XX"
= Length in meters (00.25 m min. to 50.00 m max.)
Standard lengths

–T
= Terminal

–S
= Socket

–P
= Plastic

–M
= Metal

–1
= Orange, 45°

–BC
= Blunt Cut

–S1
= Connector determined by lead style.
(Specify LEAD STYLE from chart)

LEAD STYLE	-S1 END 2	MATES WITH -S1
–01	MMSD (24 AWG)	IPL1
–02		
–03	MPSS (16 AWG)	MPT

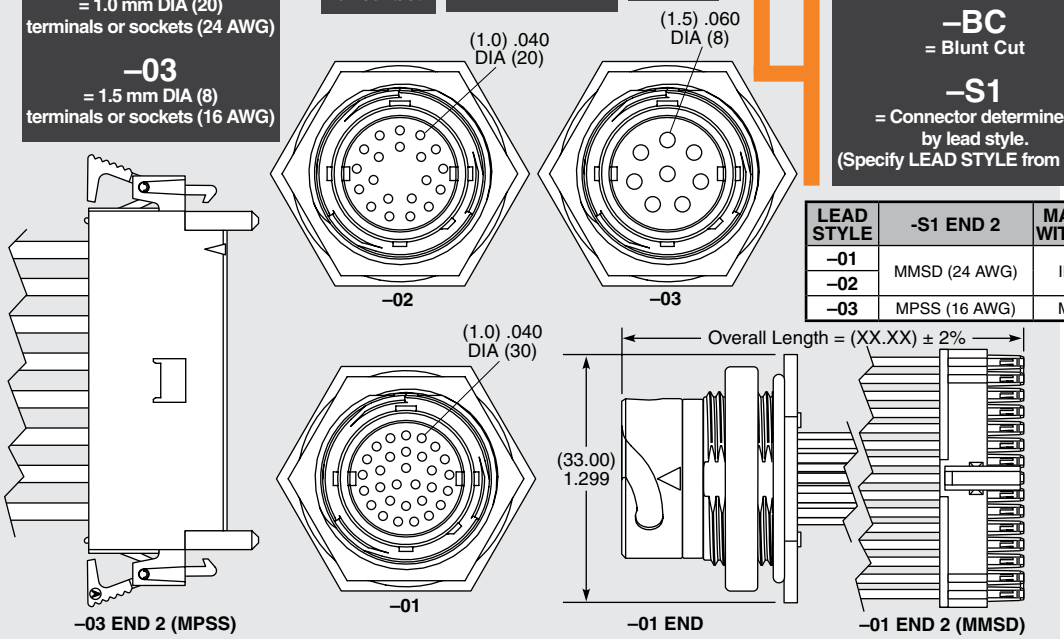

Due to technical progress, all designs, specifications and components are subject to change without notice.

All parts within this catalog are built to Samtec's specifications.
Customer specific requirements must be approved by Samtec and identified in a Samtec customer-specific drawing to apply.