| REVISIONS | | | | | |
|---|---|---|---|---|---|
| REV | ECO | DESCRIPTION | DATE | BY | APPR |
| A1 | -- | RELEASE NEW DRAWING | 17/JAN/24 | LYNCH | TOMMY |

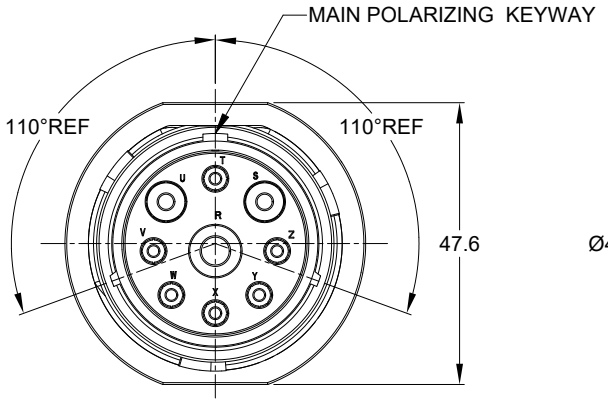


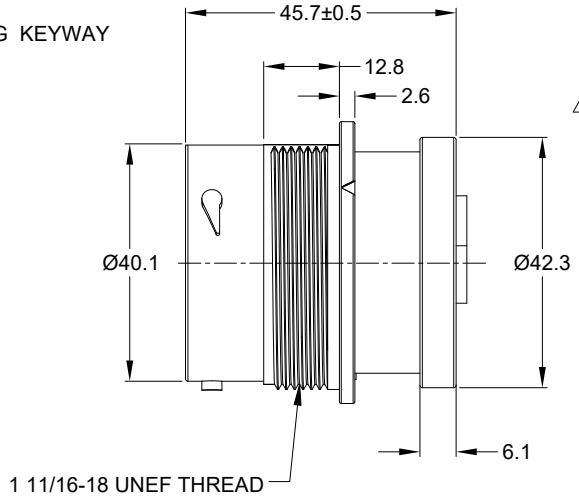


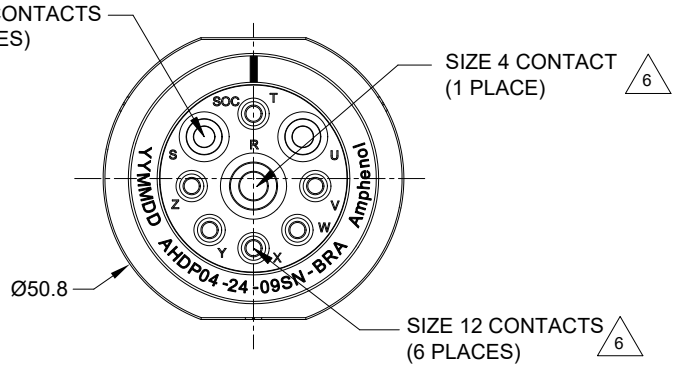


NOTES: UNLESS OTHERWISE SPECIFIED

1. MATERIAL:
   HOUSING: THERMOPLASTIC; BLACK
   SEAL: SILICONE RUBBER
2. MODIFICATIONS: BACKSHELL RING ADAPTER (BRA);
   NORMAL DIA. WIRE SEAL.
3. SPECIFICATIONS:
   3.1 OPERATING TEMPERATURE: -55°C TO +125°C.
   3.2 DIELECTRIC WITHSTANDING VOLTAGE: LESS THAN 2 MILLIAMPS CURRENT LEAKAGE @ 1500 VOLTS AC.
   3.3 INSULATION RESISTANCE: 1000 MEGOHM MIN @ 25°C.
   3.4 MOISTURE RESISTANCE:
   IP68(IM OF WATER FOR A PERIOD OF 24 HOURS,MATED CONDITION);
   IP69K (MATED CONDITION)
   3.5 MATING CYCLE DURABILITY: 100 CYCLES
   3.6 RoHS COMPLIANT
4. MATING PART: AHDP06-24-09P*-XXX ( *=SEAL TYPE, XXX=ALL MODIFICATIONS )
5. ALL DIMENSIONS ARE FOR REFERENCE USE ONLY.

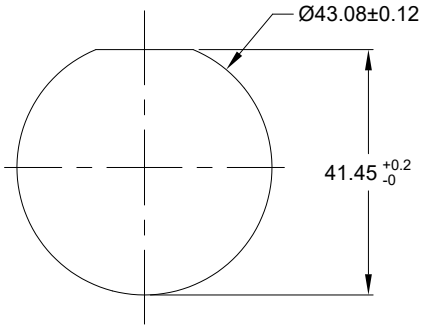


RECOMMENDED PANEL MOUNTING HOLE

RECOMMENDED PANEL THICKNESS:1.6 TO 4.7MM

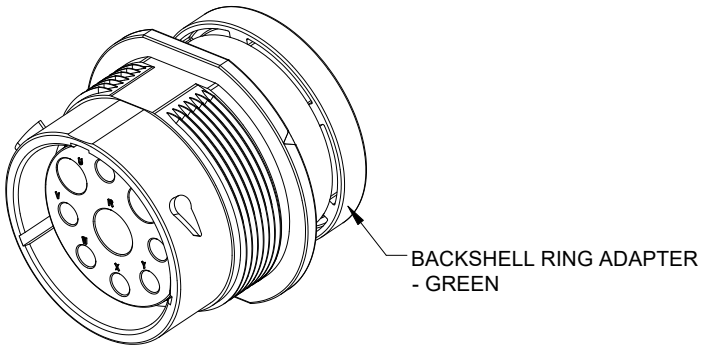


6 CONTACT SIZE AND WIRE RANGE:

| CONTACT SIZE | MIN. INSUL O.D. | MAX. INSUL O.D. | TYPICAL WIRE RANGE | CURRENT RATING |
|---|---|---|---|---|
| 4 | 6.63 mm (.261 in) | 7.42 mm (.292 in) | 6 AWG (16.0-13.0mm²) | 100 AMPS |
| 8 | 4.83 mm (.190in) | 6.10 mm (.240 in) | 8-10 AWG (10.0-5.0mm²) | 60 AMPS |
| 12 | 3.43 mm (.135 in) | 4.32 mm (.170 in) | 10-14 AWG (6.0-2.0mm²) | 25 AMPS |

7. RECEPTACLE IS SUPPLIED WITH DUST CAP.

| QUANTITY | PART NUMBER | DESCRIPTION | ITEM |
|---|---|---|---|
| | AHDP04-24-09SN-BRA | REF:HDP24-24-9SN-L017 | |

MATERIALS LIST

UNLESS OTHERWISE SPECIFIED
1) All dimensions are in metric(mm).
2) Tolerances are as follows:
1 PL DEC ±0.30 | Fractions ±1/64
2 PL DEC ±0.15 | Angles ±1°
3 PL DEC ±0.08
3) Note reference = X

MATERIAL SPECIFICATIONS:
WEIGHT: 55.2g

PROCESS SPECIFICATIONS:

NEXT ASS'Y:

| SIGNATURES | | DATE |
|---|---|---|
| DRAWN: | LYNCH.PAN | 17/JAN/24 |
| CHECKED: | SULLEN.ZHANG | 18/JAN/24 |
| ENGINEER: | | |
| APPROVAL: | TOMMY.XIE | 19/JAN/24 |
| CUSTOMER: | | |

THIS DRAWING IS SUPPLIED FOR INFORMATION ONLY. DESIGN FEATURES, SPECIFICATIONS AND PERFORMANCE DATA SHOWN HEREON ARE THE PROPERTY OF THE AMPHENOL CORPORATION. NO RIGHTS OF REPRODUCTION ARE IMPLIED. ALL DIMENSIONS ARE SUBJECT TO NORMAL MANUFACTURING VARIATIONS.

Amphenol

Sine Systems - www.amphenol-sine.com
44724 Morley Drive
Clinton Township, MI 48036

9POS, RECEPTACLE, SOCKET, SIZE 24, NORMAL SEAL, BRA, DURAMATE AHDP

| SIZE | TYPE | DWG NO: | REVISION |
|---|---|---|---|
| B | C- | AHDP04-24-09SN-BRA | A1 |

SCALE: NONE | DURAMATE | SHEET 1 OF 1

TITLE: 9POS, RECEPTACLE, SOCKET, SIZE 24, NORMAL SEAL, BRA, DURAMATE AHDP
DWG NO: AHDP04-24-09SN-BRA
REV: A1
SH: 1
OF: 1