REV	ECN NO	DESRIPTION	DESIGN	APPROVAL	DATE
A1	NEW	Replace frame			2020.06.12

ROHS

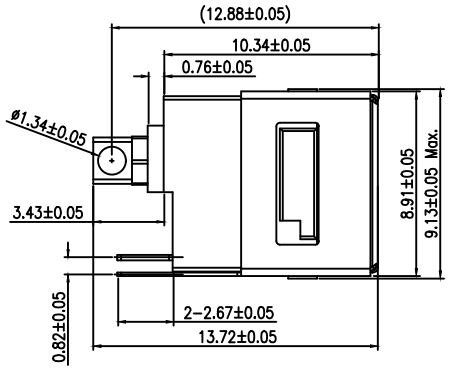

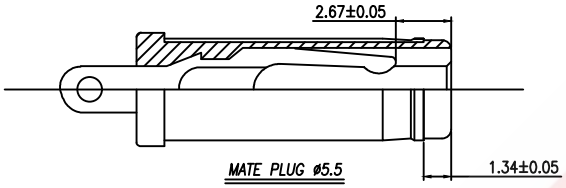

SPECIFICATIONS:

1. ELECTRICAL CHARACTERISTICS:
   1-1. RATING: 20V, 10A .
   1-2. CONTACT RESISTANCE:
   50 MILLIOHMS Max. FOR INITIAL,
   80 MILLIOHMS Max. AFTER 5000 CYCLES.
   1-3. INSULATION RESISTANCE: 100 MEGAOHMS Min. BY 500V DC AFTER 1 MINUTE.
   1-4. DIELECTRIC WITHSTANDING VOLTAGE: 500V RMS AFTER 1 MINUTE.
2. MECHANICAL CHARACTERISTICS:
   2-1. INSERTION FORCE : 0.3~3.0 KGF(2.94~29.4N)
   2-2. WITHDRAWAL FORCE : 0.3~3.0 KGF(2.94~29.4N)
3. LIFE TEST: 5,000 CYCLES MIN.

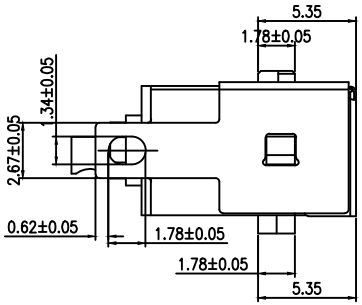

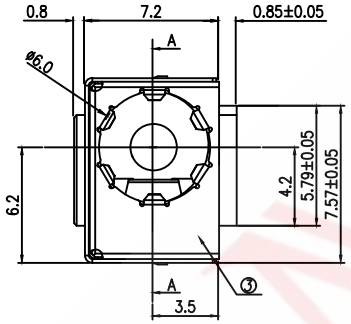

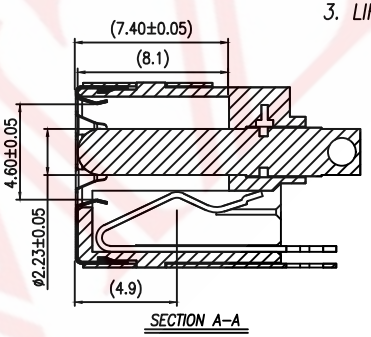

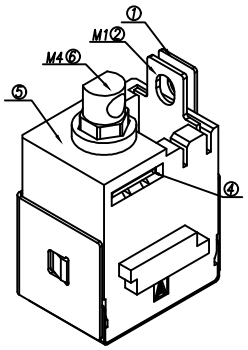

9C H 3 103 B E G A

- Model Definition
- Mould Number: MX04425
- Needle Diameter: 2.5 mm
- Fixing Method: Without Fixed Column
- Interface Method: Conventional Interface
- Overall Length: 13.7 mm
- Pin Position: 3 Pins
- Mounting Method: Vertical, Wire Welding
- Product Series: DC Power Jacks

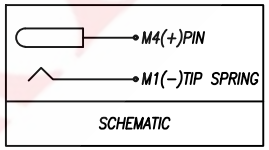

⑥	PIN	1	BRASS BAR	Au-Plated
⑤	HOUSING	1	HIGH TEMP.THERMOPLASTIC	Black
④	TERMINAL	1	STAINLESS STEEL t=0.30	N/A
③	GROUND	1	STAINLESS STEEL t=0.10	Ni-Plated
②	TIP SPERING	1	COPPER ALLOY t=0.20	Ag-Plated
①	SHELL	1	STAINLESS STEEL t=0.20	Sn-Plated

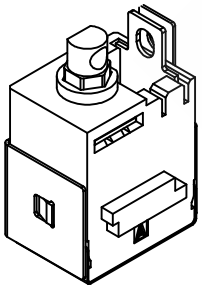

DESIGN	WANGGUIFA	2018.06.12		
CHECKED	ZHENGUILAN	2018.06.12		
APPROVED	LILIANJIANG	2018.06.14		

GENERAL TOLERANCE	
≥0~2<	±0.15
≥2~5<	±0.25
≥0~2<	±0.15
≥5	±0.35

FIRST VIEW

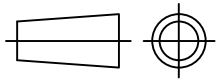

SCALE	1:1	UNIT	mm

The copyright belongs to samzo parts [China] Co., Ltd. please use the material after samzo parts agree to authorize. The final right of interpretation belongs to samzo parts.
WWW.KKK-JP.COM

SAMZO COMPONENTS
Electronic switch and connector manufacturer

TITLE:: 大电流 焊线式 镀金2.5

DWG NO: 9CH3103-A044

PART NO: 9CH3-2304425

MODEL NO: 9CH3103BEGA

NAME: DC JACK