Downloaded from Arrow.com.

REVISIONS					
REV	ECO	DESCRIPTION	DATE	BY	APPR
A3	-	RELEASE NEW DWG FORMAT	22FEB14	JARRY	-

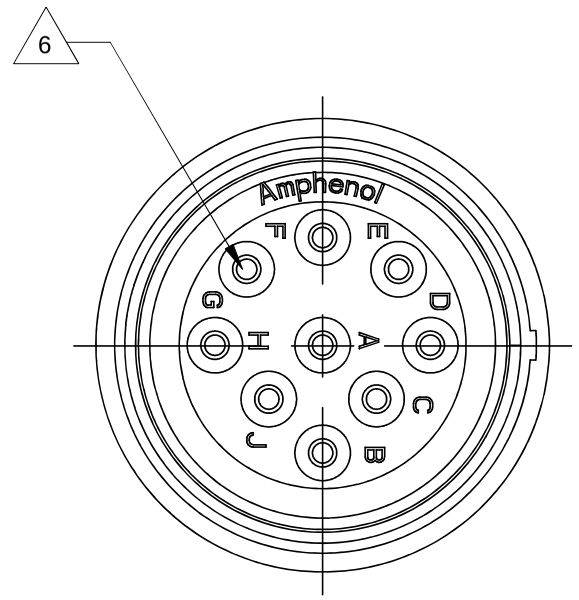

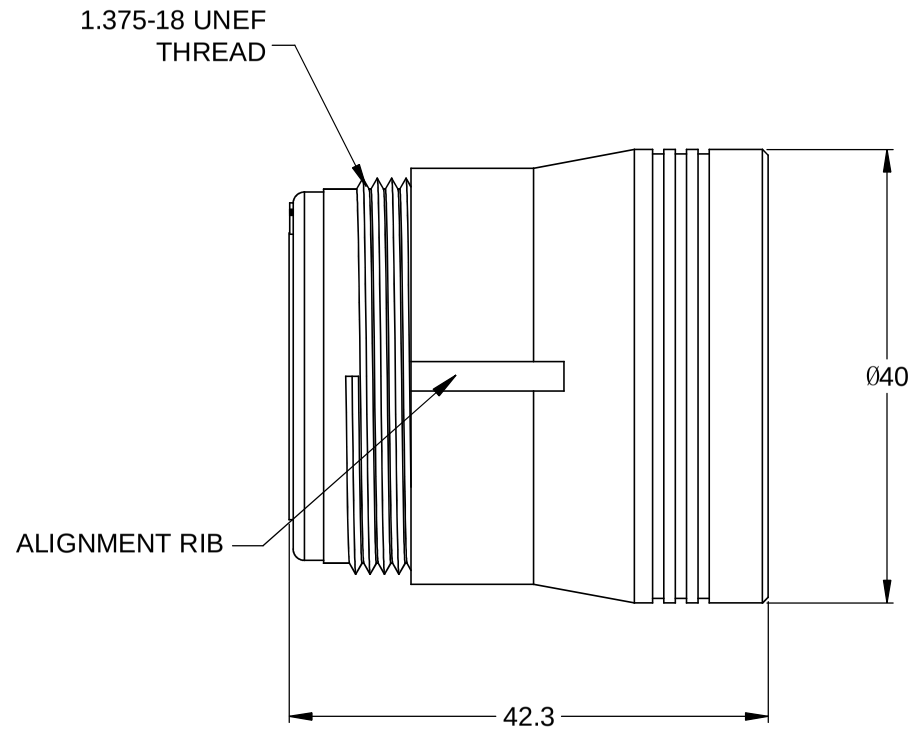

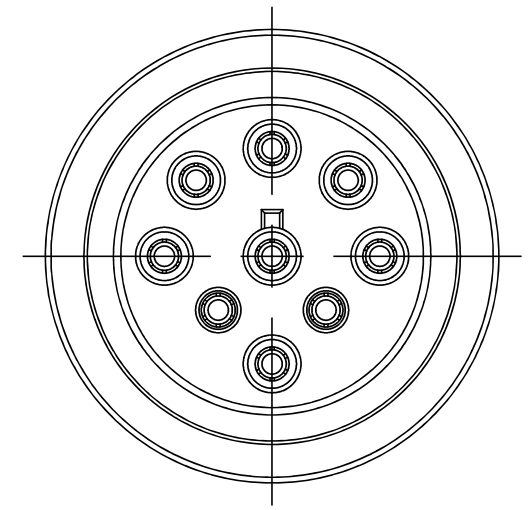

NOTES: UNLESS OTHERWISE SPECIFIED

1. MATERIAL:
   HOUSING: THERMOPLASTIC; BLACK
   SEAL: SILICONE RUBBER

2. MODIFICATIONS: NO COUPLING RING;
   J1939 KEY ARRANGEMENT

3. SPECIFICATIONS:
   3.1 CURRENT RATING: 13 AMPS
   3.2 OPERATING TEMPERATURE: -55°C TO +125°C.
   3.3 DIELECTRIC WITHSTANDING VOLTAGE: LESS THAN 2 MILLIAMPS CURRENT LEAKAGE @ 1500 VOLTS AC.
   3.4 INSULATION RESISTANCE: 1000 MEGOHM MIN @ 25°C.
   3.5 MOISTURE RESISTANCE: IP67 (MATED CONDITION).
   3.6 MATING CYCLE DURABILITY: 100 CYCLES
   3.7 RoHS COMPLIANT

4. MATING PART: AHD10-9-1939P* AND AHD14-9-1939P*
   (* = SEAL TYPE)

5. ALL DIMENSIONS ARE FOR REFERENCE USE ONLY.

6 CONTACT SIZE AND WIRE RANGE:

CONTACT SIZE	MIN. INSUL O.D.	MAX. INSUL O.D.	TYPICAL WIRE RANGE
16	2.54 mm (.100 in)	3.81 mm (.150 in)	14 - 20 AWG

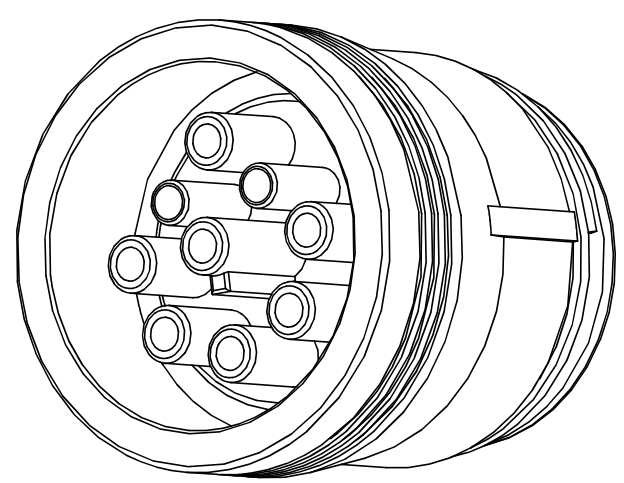

3D VIEW

QUANTITY	PART NUMBER	DESCRIPTION	ITEM
	AHD17-9-1939S		

MATERIALS LIST

UNLESS OTHERWISE SPECIFIED
1) All dimensions are in metric(mm).
2) Tolerances are as follows:
1 PL DEC ±0.30 | Fractions ±1/64
2 PL DEC ±0.15 | Angles ±1°
3 PL DEC ±0.08
3) Note reference = X

MATERIAL SPECIFICATIONS:

PROCESS SPECIFICATIONS:

NEXT ASS'Y:

SIGNATURES		DATE
DRAWN:	JARRY	22FEB14
CHECKED:		
ENGINEER:		
APPROVAL:		
CUSTOMER:		

THIS DRAWING IS SUPPLIED FOR INFORMATION ONLY. DESIGN FEATURES, SPECIFICATIONS AND PERFORMANCE DATA SHOWN HEREON ARE THE PROPERTY OF THE AMPHENOL CORPORATION. NO RIGHTS OF REPRODUCTION ARE IMPLIED. ALL DIMENSIONS ARE SUBJECT TO NORMAL MANUFACTURING VARIATIONS.

Amphenol

Sine Systems - www.amphenol-sine.com
44724 Morley Drive
Clinton Township, MI 48036

PLUG, 9 POSITION, J1939,
NO COUPING RING, AHD SERIES

SIZE	TYPE	DWG NO:	REVISION
B	C-	AHD17-9-1939S	A3

SCALE: NONE

SHEET 1 OF 1

TITLE: PLUG,9 POSITION,J1939,NO COUPING RING,AHD SERIES
DWG NO: AHD17-9-1939S
REV: A3
SH: 1
OF: 1