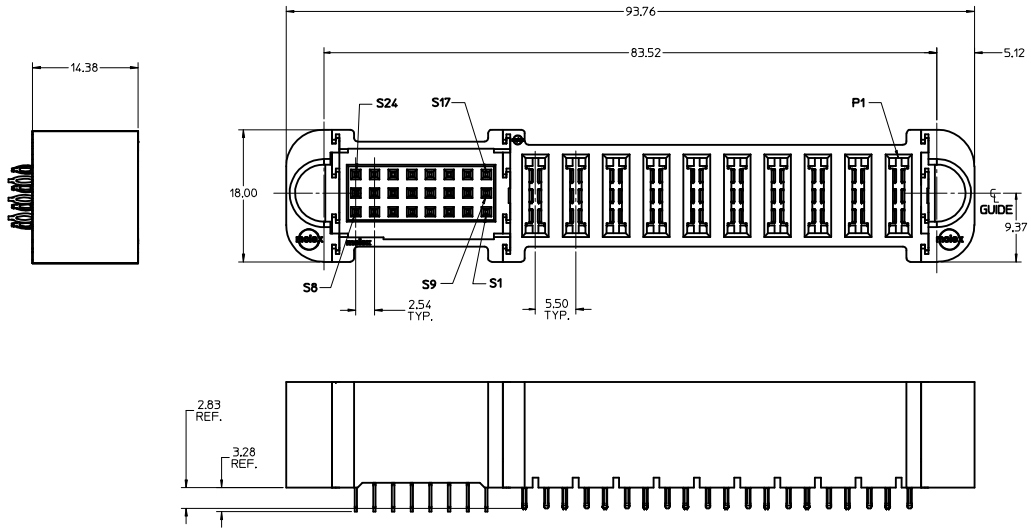

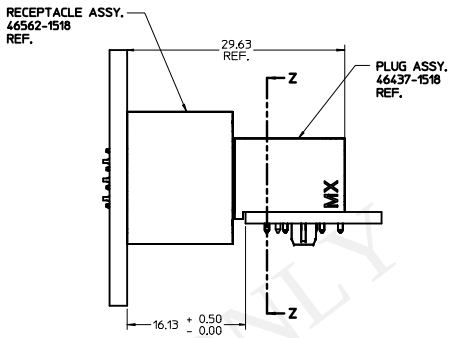

MATING PROFILE

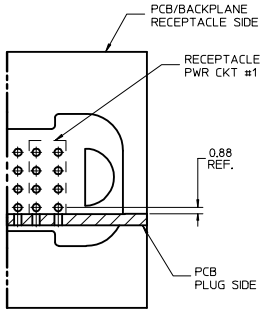

PARTIAL1

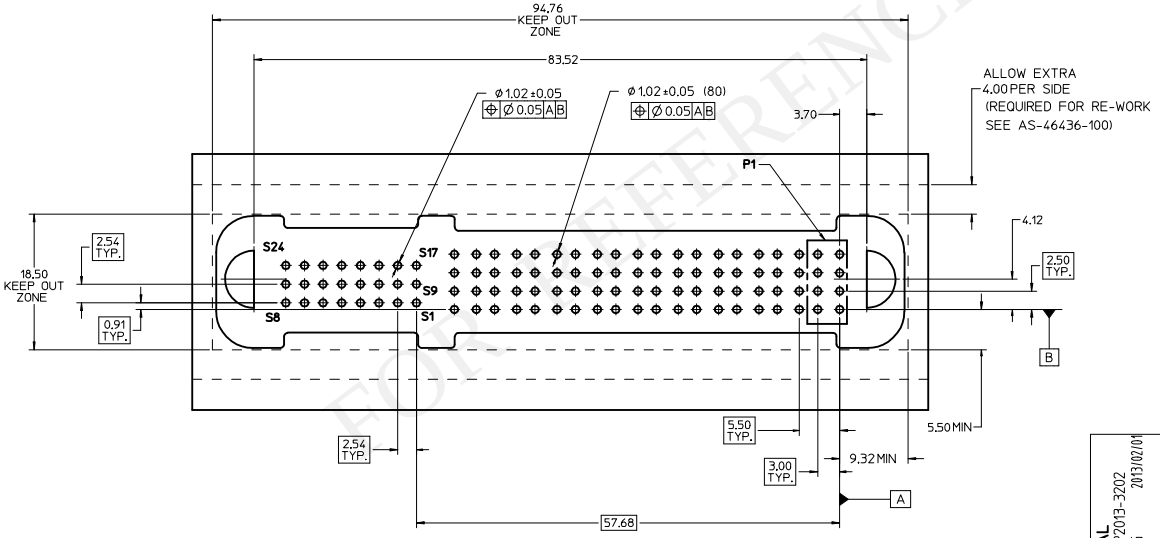

NOTES:

1. MATERIAL:
   - HOUSING: LCP UL94V-0, COLOR: BLACK
   - TERMINALS: COPPER ALLOY
   - PLATING: 0.00127 NICKEL OVERALL WITH 0.00254 SELECTIVE MATTE TIN ON COMPLIANT PINS AND 0.000762 SELECTIVE GOLD ON CONTACT AREA.
2. PACKAGING ASSEMBLIES TO BE TRAY PACKED PER PACKAGING SPEC PK-46562-****
3. PRODUCT SPEC: PS-46436-100.
4. APPLICATION SPEC: AS-46436-100
5. PCB REQUIRES SOLDER THRU HOLES. REFER TO PS-46436-100 FOR DETAILS.
6. PRODUCT TO MEET RoHS REQUIREMENTS.
7. ASSEMBLY MATES WITH MOLEX PLUG ASSEMBLY P/N 46437-1518

PROPOSAL	EC NO: UCP2013-3202	DRWN:SKANG	2013/02/01
		CHKD:	
		APPR:SKANG	2013/04/08
REV: 1	DESCRIPTION		

QUALITY SYMBOLS

GENERAL TOLERANCES (UNLESS SPECIFIED)

	mm	INCH
4 PLACES	± ---	± ---
3 PLACES	± ---	± ---
2 PLACES	± 0.25	± ---
1 PLACE	± 0.25	± ---
ANGULAR ±1/2°		

DRAFT WHERE APPLICABLE MUST REMAIN WITHIN DIMENSIONS

DIMENSION STYLE: MM/IN	SCALE: 3:1	DESIGN UNITS: METRIC	THIRD ANGLE PROJECTION
DRAWN BY: SKANG	DATE: 2013/02/01	TITLE: RECEPTACLE ASSY VERTICAL PRESS-FIT G-10P 24S-G	
CHECKED BY	DATE		
APPROVED BY: SKANG	DATE: 2013/04/08	MOLEX INCORPORATED	
MATERIAL NO.: 46562-1518		DOCUMENT NO.: SD-46562-1518	SHEET NO.: 1 OF 1
SIZE: D	THIS DRAWING CONTAINS INFORMATION THAT IS PROPRIETARY TO MOLEX INCORPORATED AND SHOULD NOT BE USED WITHOUT WRITTEN PERMISSION		

FOR REFERENCE USE ONLY