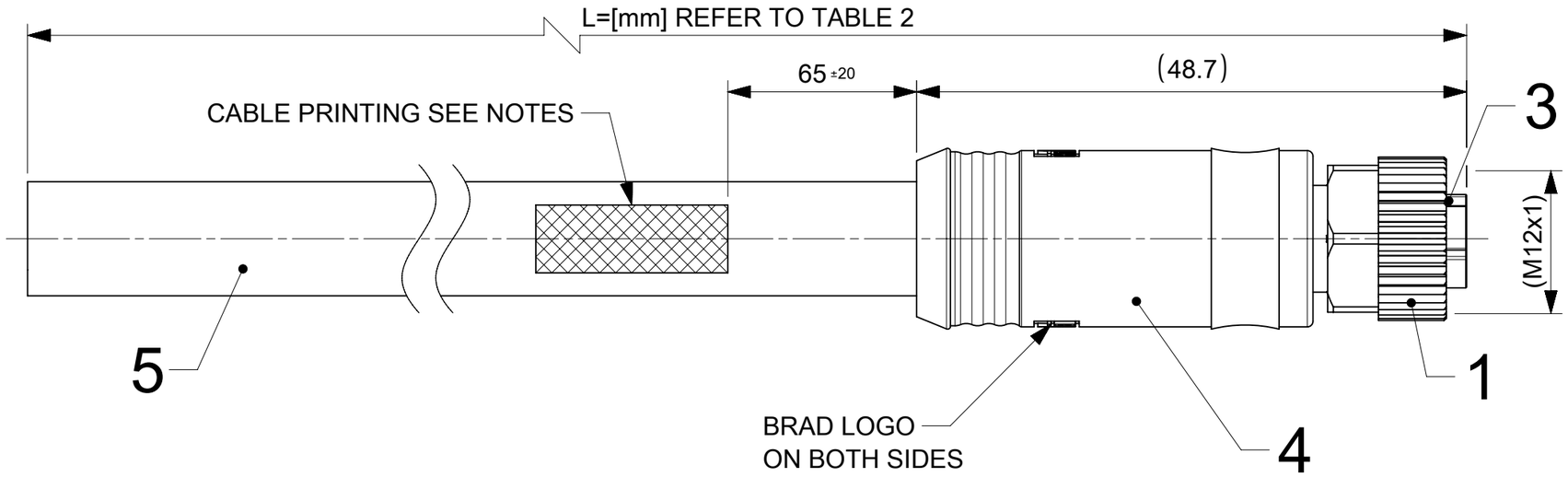

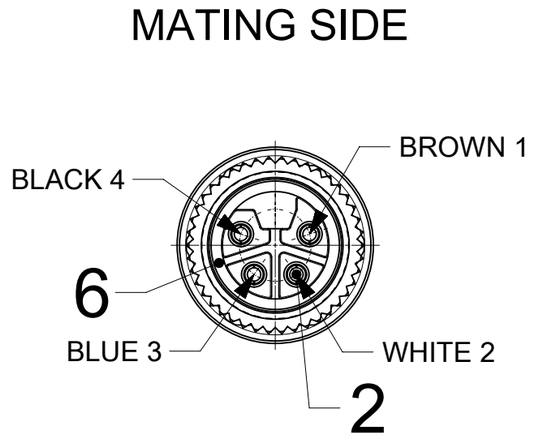

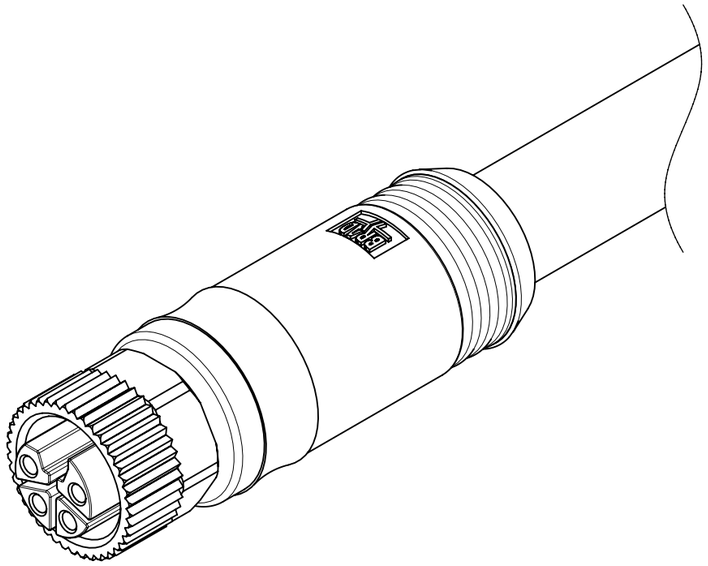

NOTES:

RATED VOLTAGE: MAX. 63V AC/DC
RATED CURRENT: MAX. 16A at 40°C (derating has to be considered)
IP RATING: IP67 (mated and locked condition)
TEMPERATURE RANGE: -25°C TO +85°C

CABLE PRINTING (sequence as shown below):
- MOLEX engineering no. (see page 2)
- MOLEX material no. (see page 2)
- MOLEX MAX. 63V AC/DC MAX. 16 A USR
- MOLEX AND DATE OF MANUFACTURING (YY=YEAR; WW=WEEK): MXYYWW
- Not for current interrupting
- PROFINET 24V Power 4x2,5

PART ACCORDING PRODUCT SPEC: 1205010169
PACKAGING ACCORDING PACKAGING SPEC: 1201202000

TABLE 1

	POS	DESCRIPTION	MATERIAL	FINISH
	1	NUT M12 FE	BRASS	Ni
	2	CONTACT 15 FE	BRASS	Au
	3	INSERT	PA	BLACK
	4	OVERMOLD	TPE	BLACK
	5	CABLE 4x2.5 D10.1 WSOR	PUR	BLACK
	6	GASKET OR 8.2X1.25	FKM	BLACK
OPTIONAL	7	ID CARRIER	-	-

THIS DRAWING CONTAINS INFORMATION THAT IS PROPRIETARY TO MOLEX ELECTRONIC TECHNOLOGIES, LLC AND SHOULD NOT BE USED WITHOUT WRITTEN PERMISSION

FUNCTIONAL SYMBOLS: FA = 0, FC = 0, FP = 0
DIVISIONAL SYMBOLS

DIMENSION UNITS: mm
SCALE: 2:1

GENERAL TOLERANCES (UNLESS SPECIFIED)

ANGULAR TOL	±	1.0 °
4 PLACES	±	
3 PLACES	±	
2 PLACES	±	0.05
1 PLACE	±	0.3
0 PLACES	±	0.5

DRAFT WHERE APPLICABLE MUST REMAIN WITHIN DIMENSIONS

CURRENT REV DESC: UPDATED ATTRIBUTE TO GENERAL MARKET IN ECTR

EC NO: 735577
DRWN: NIKHIS3 2023/01/11
CHK'D: RSILLER 2023/01/19
APPR: RSILLER 2023/01/19

INITIAL REVISION:
DRWN: FDAFERNER 2020/05/12
APPR: RSILLER 2021/10/05

molex

CSE M12 4P LC FE STR WSOR BK XM UNSH

PRODUCT CUSTOMER DRAWING

DOCUMENT NUMBER	DOC TYPE	DOC PART	REVISION
1205000228	PSD	000	A1

THIRD ANGLE PROJECTION | DRAWING: A3-SIZE | SERIES: 120500 | MATERIAL NUMBER: SEE TABLE 2 | CUSTOMER: GENERAL MARKET | SHEET NUMBER: 1 OF 2

DOCUMENT STATUS	P1	RELEASE DATE	2023/01/19 11:13:28

FORMAT: master_Sheet-A3
REVISION: J
DATE: 2020/01/16

ENGINEERING NO - NUMERICAL CODE (Available parts see PART LIST table. Other parts available upon request).

1	2	3	4	5	6	7	8	9	10	11	12	13	14	OPTIONAL
L	0	P	X	0	0	0	B	6	5	M	X	X	X	X

- 1: L = L-Code — First End
- 2: 0 = SE — Second End
- 3: P = Power
- 4: 4 = 4 POLES; 5 = 5 POLES — Number of Pins
- 5–7: SINGLE ENDED UNSHLD; 000 = female straight — Head configuration
- 8–10: B65 = CABLE 4X2.5 WSOR BK D10.1 TPU UNSH — Cable used
- 11: M = Meter — Unit of measure
- 12–14: 005 = 0.5 Meter; 010 = 1 Meter; 020 = 2 Meter; 100 = 10 Meter; 150 = 15 Meter — Cable length
- OPTIONAL: H = ID Tag

TABLE 2

NOMINAL SECTION 2,5mm²			
MATERIAL NO.	ENGINEERING NO.	L [mm]	TOLERANCE [mm]
1205000228	L0P4000B65M010	1000	+40
1205000229	L0P4000B65M020	2000	+60
1205000230	L0P4000B65M030	3000	+60
1205000231	L0P4000B65M050	5000	+60
1205000232	L0P4000B65M100	10000	+80
1205000233	L0P4000B65M150	15000	+140
1205000234	L0P4000B65M200	20000	+140

THIS DRAWING CONTAINS INFORMATION THAT IS PROPRIETARY TO MOLEX ELECTRONIC TECHNOLOGIES, LLC AND SHOULD NOT BE USED WITHOUT WRITTEN PERMISSION

FUNCTIONAL SYMBOLS: FA = 0; FC = 0; FD = 0

DIVISIONAL SYMBOLS

DIMENSION UNITS: mm — SCALE: 1:1

GENERAL TOLERANCES (UNLESS SPECIFIED)

ANGULAR TOL	± 1.0 °
4 PLACES	±
3 PLACES	±
2 PLACES	± 0.05
1 PLACE	± 0.3
0 PLACES	± 0.5

DRAFT WHERE APPLICABLE MUST REMAIN WITHIN DIMENSIONS

CURRENT REV DESC: UPDATED ATTRIBUTE TO GENERAL MARKET IN ECTR

EC NO: 735577
DRWN: NIKHIS3 2023/01/11
CHK'D: RSILLER 2023/01/19
APPR: RSILLER 2023/01/19

INITIAL REVISION:
DRWN: FDAFERNER 2020/05/12
APPR: RSILLER 2021/10/05

molex

CSE M12 4P LC FE STR WSOR BK XM UNSH

PRODUCT CUSTOMER DRAWING

DOCUMENT NUMBER	DOC TYPE	DOC PART	REVISION
1205000228	PSD	000	A1

THIRD ANGLE PROJECTION	DRAWING	SERIES	MATERIAL NUMBER	CUSTOMER	SHEET NUMBER
	A3-SIZE	120500	SEE TABLE 2	GENERAL MARKET	2 OF 2

DOCUMENT STATUS	P1	RELEASE DATE	2023/01/19 11:13:28

FORMAT: master_Sealed-A3
REVISION: J
DATE: 2020/01/14