New

RoHS

Modular F.R.L. Units

Better visibility and environmental resistance

Double layer design

The bowl is covered with a transparent bowl guard!

- The inside is visible from 360°.
- The bowl is completely protected from the environment. Safety improved

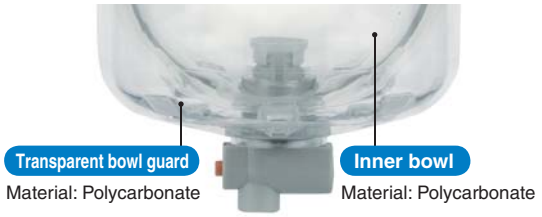

∗ Body size: 30 or more

Energy saving regulator

Pressure drop: Max. 50% improvement

Set pressure: 0.05 to 0.7 MPa
0.02 to 0.2 MPa

Easy replacement of the element

The element and the bowl are in one piece.
Replacement can be done in hand.

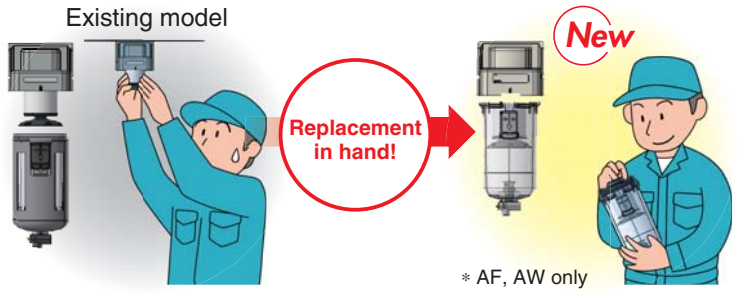

∗ AF, AW only

Reduced required maintenance space

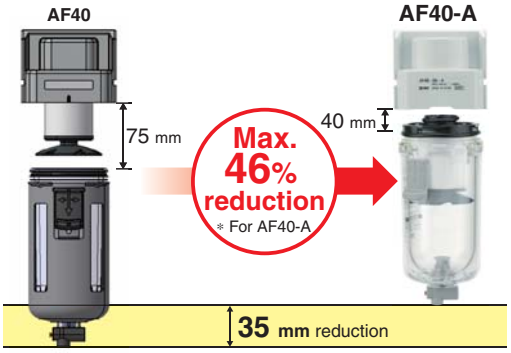

New Body size 10, 50, 60 added!

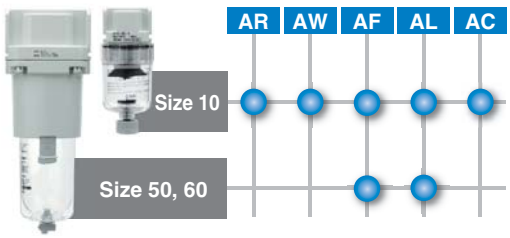

Series AC

SMC

CAT.EUS40-56D-UK

Series AC

Transparent bowl guard

Better environmental resistance: Transparent bowl guard can protect the inner bowl!

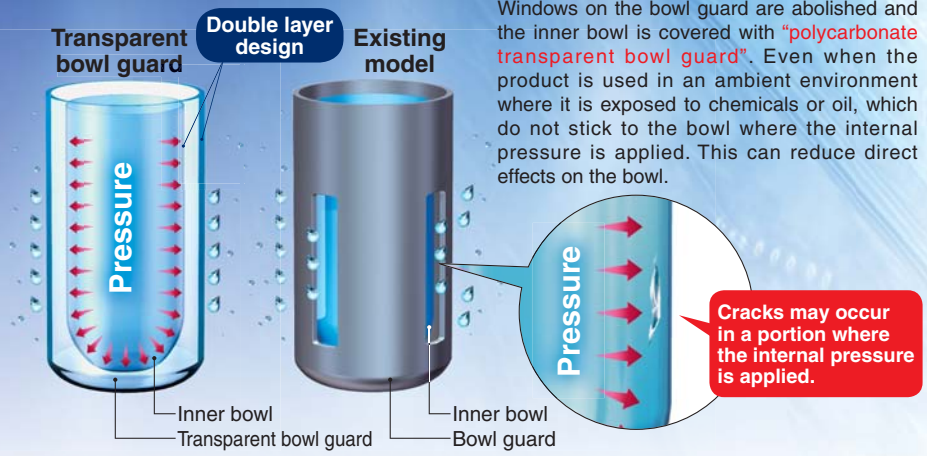

Windows on the bowl guard are abolished and the inner bowl is covered with "polycarbonate transparent bowl guard". Even when the product is used in an ambient environment where it is exposed to chemicals or oil, which do not stick to the bowl where the internal pressure is applied. This can reduce direct effects on the bowl.

Applicable model

Air Filter **AF**

Mist Separator **AFM**

Micro Mist Separator **AFD**

Filter Regulator **AW**

Lubricator **AL**

∗ Body size: 30 or more

Better visibility: 360°

Use of transparent bowl guard makes it possible to check the condensate inside the filter case and the remaining oil amount in the lubricator from the entire periphery.

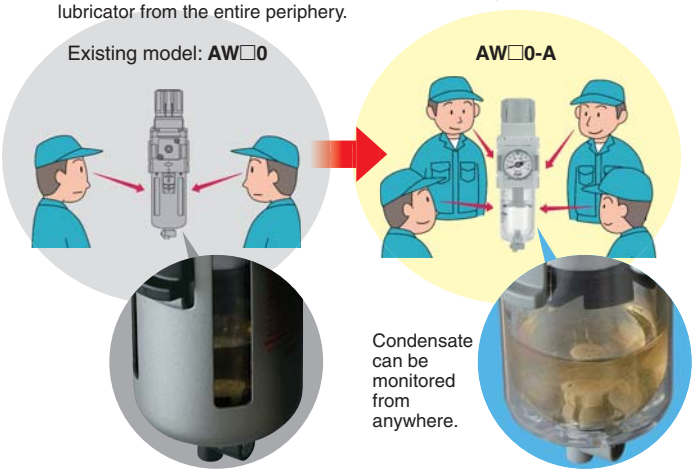

Light weight: Max. 90 g reduction

∗ Except AW

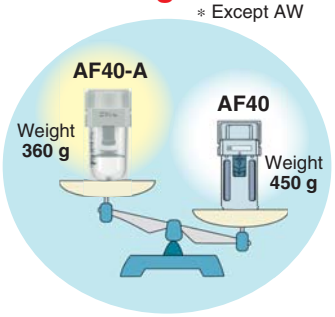

Metal related corrosion does not occur.

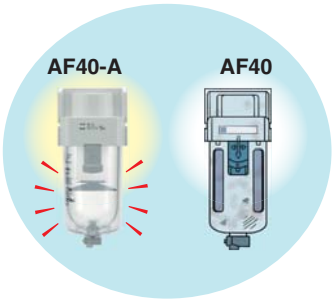

Resin body does not rust.

Regulator/AR Filter Regulator/AW

Pressure drop: Max. 50% improvement

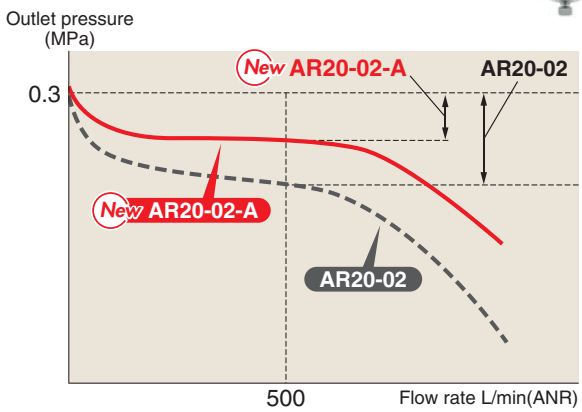

Conditions

- ◆Inlet pressure: 0.5 MPa
- ◆Outlet pressure: 0.3 MPa
- ◆Flow rate: 500 L/min(ANR)

New Spacer

Modular connection

Step ①

- Mount the product by lining up the mating surface of the new spacer with bracket.
- Insert the retainer into the spacer bolt and tighten the nut. (temporary assembling)

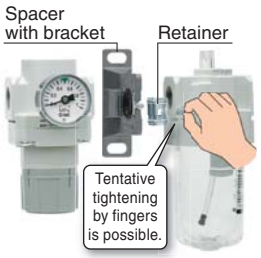

Step ②

- Tighten the nut with the hexagon wrench.

Interchangeable with existing model

- New spacer can be connected to existing AF, AR, AL, AW series.
- Existing spacer cannot be used for new AR □-A, AW□-A series.

Series AC

Series Configuration

Product	Model	Port size							INDEX
		M5	1/8	1/4	3/8	1/2	3/4	1	
Air Combination									
Air Filter + Regulator + Lubricator AF AR AL 	AC10-A	●							P.7
	AC20-A		●	●					
	AC25-A			●	●				
	AC30-A			●	●				
	AC40-A			●	●	●			
	AC40-06-A						●		
Filter Regulator + Lubricator AW AL 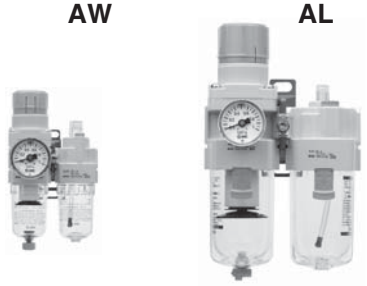	AC10A-A	●							P.13
	AC20A-A		●	●					
	AC30A-A			●	●				
	AC40A-A			●	●	●			
	AC40A-06-A						●		
Air Filter + Regulator AF AR 	AC10B-A	●							P.17
	AC20B-A		●	●					
	AC25B-A			●	●				
	AC30B-A			●	●				
	AC40B-A			●	●	●			
	AC40B-06-A						●		
Air Filter + Mist Separator + Regulator AF AFM AR 	AC20C-A		●	●					P.21
	AC25C-A			●	●				
	AC30C-A			●	●				
	AC40C-A			●	●	●			
	AC40C-06-A						●		
Filter Regulator + Mist Separator AW AFM 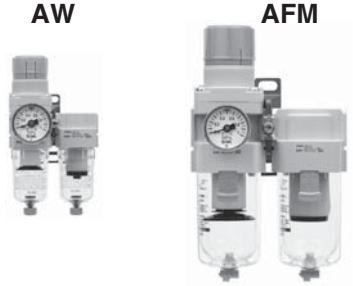	AC20D-A		●	●					P.25
	AC30D-A			●	●				
	AC40D-A			●	●	●			
	AC40D-06-A						●		

Series Configuration

Product		Model	Port size							INDEX
			M5	1/8	1/4	3/8	1/2	3/4	1	
Air Filter	AF	AF10-A	●							P.34
		AF20-A		●	●					
		AF30-A			●	●				
		AF40-A			●	●	●			
		AF40-06-A						●		
		AF50-A						●	●	
		AF60-A							●	
Mist Separator	AFM	AFM20-A		●	●					P.34
		AFM30-A			●	●				
		AFM40-A			●	●	●			
		AFM40-06-A						●		
Micro Mist Separator	AFD	AFD20-A		●	●					P.34
		AFD30-A			●	●				
		AFD40-A			●	●	●			
		AFD40-06-A						●		
Regulator	AR	AR10-A	●							P.54
		AR20-A		●	●					
		AR25-A			●	●				
		AR30-A			●	●				
		AR40-A			●	●	●			
		AR40-06-A						●		

	Product	Model	Port size							INDEX
			M5	1/8	1/4	3/8	1/2	3/4	1	
Lubricator	AL	AL10-A	●							P.64
		AL20-A		●	●					
		AL30-A			●	●				
		AL40-A			●	●	●			
		AL40-06-A						●		
		AL50-A						●	●	
		AL60-A							●	
Filter Regulator	AW	AW10-A	●							P.72
		AW20-A		●	●					
		AW30-A			●	●				
		AW40-A			●	●	●			
		AW40-06-A						●		

Simple Specials System

A system designed to respond quickly and easily to your special ordering needs

Short lead times

This system enables us to respond to your special needs, such as additional machining, accessory assembly, or modular unit, and deliver such special products as quickly as standard products.

Repeat orders

Once we receive a Simple Special part number from your previous order, we will process the order, manufacture the product, and deliver it to you.

Attachment List

Check valve
Page 28

■A check valve with intermediate branch port can be easily installed to prevent a backflow of lubricant when branching the air flow and releasing the air on the outlet side of the regulator.

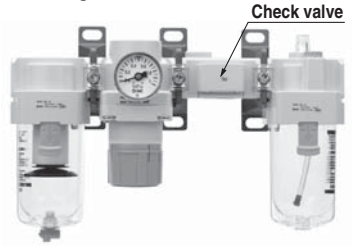

Applicable series
- Air Filter + Regulator + Lubricator (**AC20-A to AC40-A**)
- Filter Regulator + Lubricator (**AC20A-A to AC40A-A**)
  ∗ Port size: Except 06

Pressure switch
Page 29

■A compact integrated pressure switch can be easily installed and facilitates the pressure detection of the line.

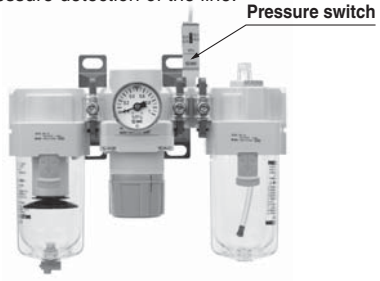

Applicable series
- Air Filter + Regulator + Lubricator (**AC20-A to AC40-A**)
- Filter Regulator + Lubricator (**AC20A-A to AC40A-A**)
- Air Filter + Regulator (**AC20B-A to AC40B-A**)
- Air Filter + Mist Separator + Regulator (**AC20C-A to AC40C-A**)
- Filter Regulator + Mist Separator (**AC20D-A to AC40D-A**)

T-spacer
Page 29

■Using a T-shaped spacer facilitates the branching of air flow.

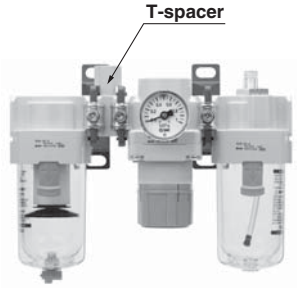

Applicable series
- Air Filter + Regulator + Lubricator (**AC10-A to AC40-A**)
- Air Filter + Regulator (**AC10B-A to AC40B-A**)
- Air Filter + Mist Separator + Regulator (**AC20C-A to AC40C-A**)

Pressure relief 3 port valve
Page 30

■With the use of a pressure relief 3 port valve, pressure left in the line can be easily exhausted.

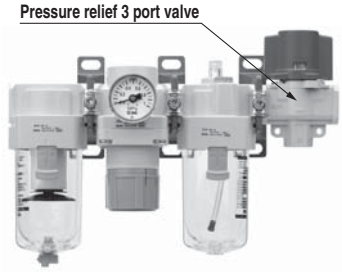

Applicable series
- Air Filter + Regulator + Lubricator (**AC20-A to AC40-A**)
- Filter Regulator + Lubricator (**AC20A-A to AC40A-A**)
- Air Filter + Regulator (**AC20B-A to AC40B-A**)
- Air Filter + Mist Separator + Regulator (**AC20C-A to AC40C-A**)
- Filter Regulator + Mist Separator (**AC20D-A to AC40D-A**)

Cross spacer
Page 30

■Pipings are possible in all 4 directions.

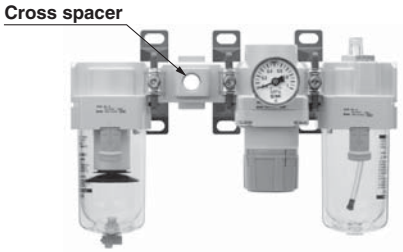

∗ Needs to be ordered separately.

Piping adapter
Page 31

■A piping adapter allows installation/removal of the component without removing the piping and thus makes maintenance easier.

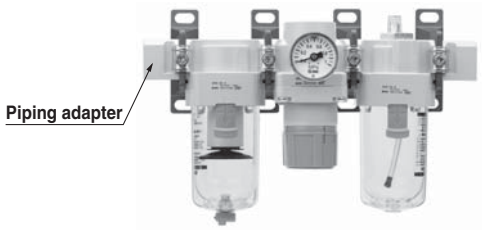

∗ Needs to be ordered separately.

Pressure switch with piping adapter Page 31

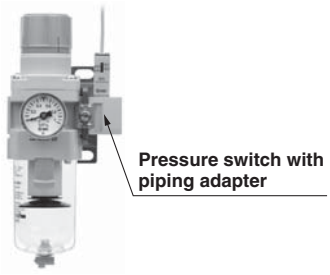

∗ Needs to be ordered separately.

Accessories (Spacer/Spacer with bracket) Page 32

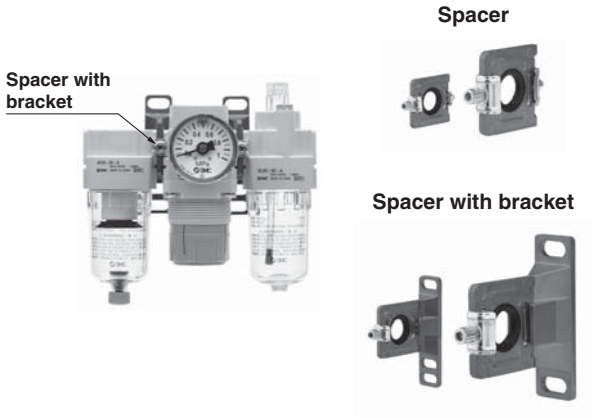

∗ Needs to be ordered separately.

Related Product

Modular adapter

Easy modular connections for all equipment!

Example) Air filter + 3 port valve

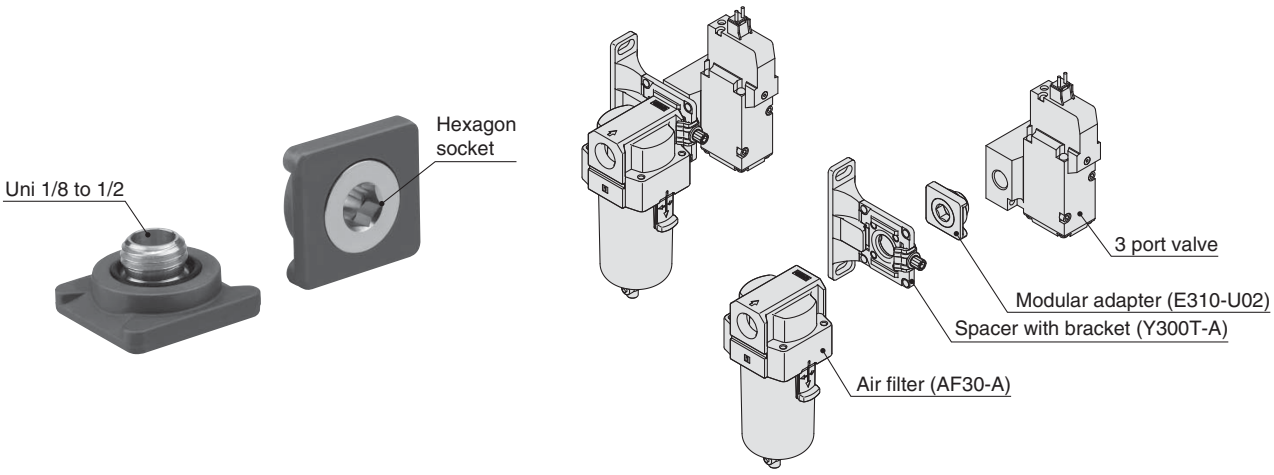

Air Combination

Air Filter + Regulator + Lubricator

AC10-A to AC40-A

Symbol

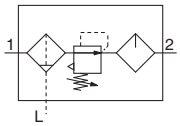

How to Order

AC 30 – ❷ 03 DG – ❺ – ❻ – A

❶ ❷ ❸ ❹ ❺ ❻

- Option/Semi-standard: Select one each for **a** to **m**.
- Option/Attachment/Semi-standard symbol: When more than one specification is required, indicate in alphanumeric order.

Example) AC30-F03DM-KSTV-13NR-A

			Symbol	Description	❶ Body size 10	20	25	30	40
❷	Pipe thread type		—	Metric thread (M5)	●	—	—	—	—
				Rc	—	●	●	●	●
			N Note 1)	NPT	—	●	●	●	●
			F Note 2)	G	—	●	●	●	●
			+						
❸	Port size		M5	M5	●	—	—	—	—
			01	1/8	—	●	—	—	—
			02	1/4	—	●	●	●	●
			03	3/8	—	—	●	●	●
			04	1/2	—	—	—	—	●
			06	3/4	—	—	—	—	●
			+						
❹	Option Note 3)	a Float type auto drain	—	Without auto drain	●	●	●	●	●
			C Note 4)	N.C. (Normally closed) Drain port is closed when pressure is not applied.	●	●	●	●	●
			D Note 5)	N.O. (Normally open) Drain port is open when pressure is not applied.	—	—	●	●	●
			+						
		b Pressure gauge Note 6)	—	Without pressure gauge	●	●	●	●	●
			G	Round type pressure gauge (without limit indicator)	●	—	—	—	—
				Round type pressure gauge (with limit indicator)	—	●	●	●	●
			M	Round type pressure gauge (with colour zone)	—	●	●	●	●
			+						
❺	Attachment	c Check valve	—	Without attachment	●	●	●	●	●
			K	Mounting position: AF+AR+**K**+AL	—	●	●	●	● Note 7)
			+						
		d Pressure switch	—	Without attachment	●	●	●	●	●
			S Note 8)	Mounting position: AF+AR+**S**+AL	—	●	●	●	●
			+						
		e T-spacer	—	Without attachment	●	●	●	●	●
			T Note 8)	Mounting position: AF+**T**+AR+AL	●	●	●	●	●
			+						
		f Pressure relief 3 port valve	—	Without attachment	●	●	●	●	●
			V	Mounting position: AF+AR+AL+**V**	—	●	●	●	●
			+						
❻	Semi-standard	g Set pressure Note 9)	—	0.05 to 0.7 MPa setting	●	●	●	●	●
			1	0.02 to 0.2 MPa setting	●	●	●	●	●
			+						
		h Bowl Note 10)	—	Polycarbonate bowl	●	●	●	●	●
			2	Metal bowl	●	●	●	●	●
			6	Nylon bowl	●	●	●	●	●
			8	Metal bowl with level gauge	—	—	●	●	●
			C	With bowl guard	—	●	— Note 11)	— Note 11)	— Note 11)
			6C	With bowl guard (Nylon bowl)	—	●	— Note 12)	— Note 12)	— Note 12)

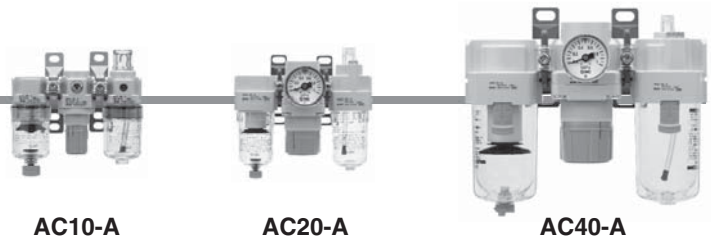

AC10-A AC20-A AC40-A

			Symbol	Description	❶ Body size 10	20	25	30	40
❻ Semi-standard	i	Air filter drain port Note 13)	—	With drain cock	●	●	●	●	●
			J Note 14)	Drain guide 1/8	—	●	—	—	—
				Drain guide 1/4	—	—	●	●	●
			W Note 15)	Drain cock with barb fitting (for ø6 x ø4 nylon tube)	—	—	●	●	●
			+						
	j	Lubricator lubricant exhaust port	—	Without drain cock	●	●	●	●	●
			3 Note 16)	Lubricator with drain cock	●	●	●	●	●
			+						
	k	Exhaust mechanism	—	Relieving type	●	●	●	●	●
			N	Non-relieving type	●	●	●	●	●
			+						
	l	Flow direction	—	Flow direction: Left to right	●	●	●	●	●
			R	Flow direction: Right to left	●	●	●	●	●
			+						
	m	Pressure unit	—	Name plate and pressure gauge in imperial units: MPa	●	●	●	●	●
			Z Note 17)	Name plate, caution plate for bowl, and pressure gauge in imperial units: psi, °F	○ Note 18)	○ Note 18)	○ Note 18)	○ Note 18)	○ Note 18)

Note 1) Drain guide is NPT1/8 (applicable to the AC20-A) and NPT1/4 (applicable to the AC25-A to AC40-A). The auto drain port comes with ø3/8" One-touch fitting (applicable to the AC25-A to AC40-A).
Note 2) Drain guide is G1/8 (applicable to the AC20-A) and G1/4 (applicable to the AC25-A to AC40-A).
Note 3) Option G, M are not assembled and supplied loose at the time of shipment.
Note 4) When pressure is not applied, condensate which does not start the auto drain mechanism will be left in the bowl. Releasing the residual condensate before ending operations for the day is recommended.
Note 5) If the compressor is small (0.75 kW, discharge flow is less than 100 L/min[ANR]), air leakage from the drain cock may occur during start of operations. N.C. type is recommended.
Note 6) When the pressure gauge is attached, a 1.0 MPa pressure gauge will be fitted for standard (0.7 MPa) type. 0.4 MPa pressure gauge for 0.2 MPa type (1.0 MPa pressure gauge only for the AC10-A).
Note 7) Not available with piping port size: 06
Note 8) The bracket position varies depending on the T-spacer or pressure switch mounting.
Note 9) Pressure can be set higher than the specification pressure in some cases, but use pressure within the specification range.
Note 10) Refer to Chemical data on page 38 for chemical resistance of the bowl.
Note 11) A bowl guard is provided as standard equipment (polycarbonate).
Note 12) A bowl guard is provided as standard equipment (nylon).
Note 13) Float type auto drain: The combination of C and D is not possible.
Note 14) Without a valve function
Note 15) The combination of metal bowl: 2 and 8 is not available.
Note 16) When choosing with W: Filter drain port, the drain cock of a lubricator will be with barb fittings.
Note 17) For pipe thread type: M5, NPT. MPa and psi are shown together on the pressure unit. Cannot be used with M: Round pressure gauge (with colour zone). Available by request for special.
Note 18) ○: For pipe thread type: M5, NPT only

Standard Specifications

Model		AC10-A	AC20-A	AC25-A	AC30-A	AC40-A	AC40-06-A
Component	Air Filter [AF]	AF10-A	AF20-A	AF30-A	AF30-A	AF40-A	AF40-06-A
	Regulator [AR]	AR10-A	AR20-A	AR25-A	AR30-A	AR40-A	AR40-06-A
	Lubricator [AL]	AL10-A	AL20-A	AL30-A	AL30-A	AL40-A	AL40-06-A
Port size		M5 x 0.8	1/8, 1/4	1/4, 3/8	1/4, 3/8	1/4, 3/8, 1/2	3/4
Pressure gauge port size [AR]		1/16	1/8				
Fluid		Air					
Ambient and fluid temperature		–5 to 60 °C (with no freezing)					
Proof pressure		1.5 MPa					
Max. operating pressure		1.0 MPa					
Set pressure range [AR]		0.05 to 0.7 MPa					
Nominal filtration rating [AF]		5 µm					
Recommended lubricant [AL]		Class 1 turbine oil (ISO VG32)					
Bowl material [AF/AL]		Polycarbonate					
Bowl guard [AF/AL]		—	Semi-standard (Steel)	Standard (Polycarbonate)			
Construction [AR]		Relieving type					
Weight [kg]		0.27	0.40	0.68	0.83	1.53	1.66

Flow-rate Characteristics (Representative values)

Condition: Inlet pressure 0.7 MPa

AC10-A

M5 x 0.8

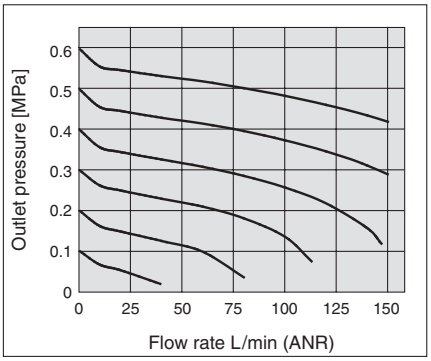

AC20-A

Rc1/4

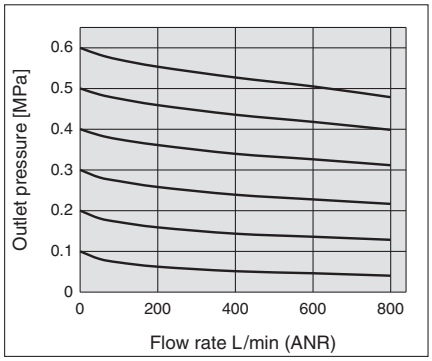

AC25-A

Rc3/8

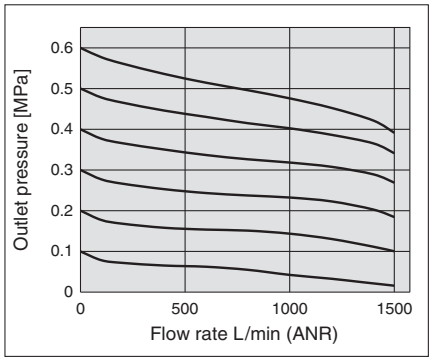

AC30-A

Rc3/8

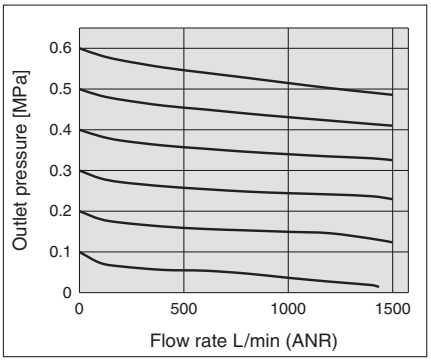

AC40-A

Rc1/2

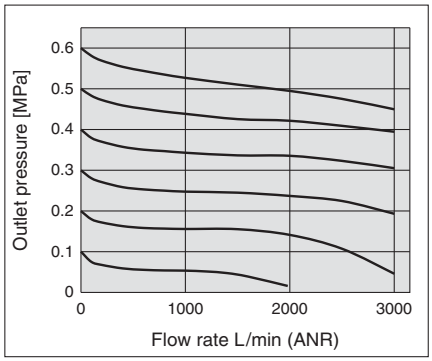

AC40-06-A

Rc3/4

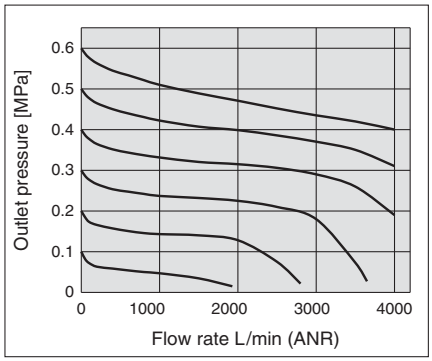

Pressure Characteristics (Representative values)

Conditions: Inlet pressure 0.7 MPa, Outlet pressure 0.2 MPa, Flow rate 20 L/min (ANR)

AC10-A

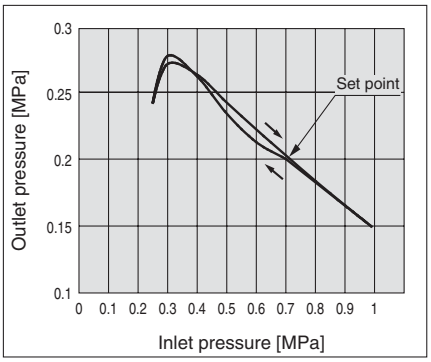

AC20-A

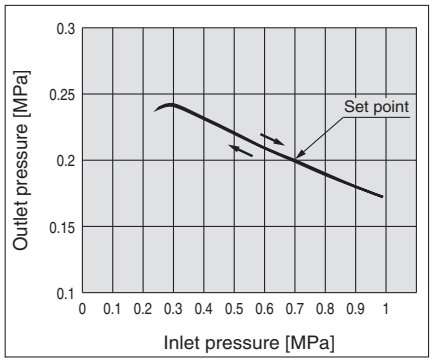

AC25-A

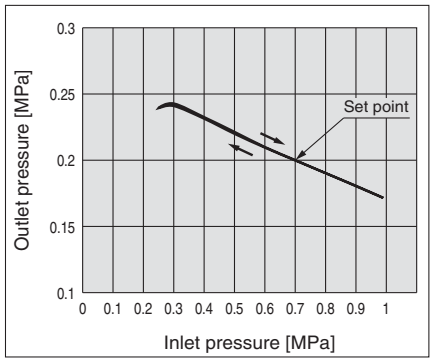

AC30-A

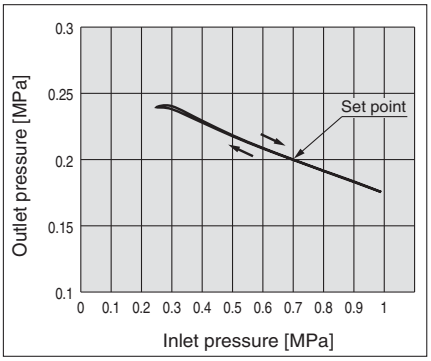

AC40-A/AC40-06-A

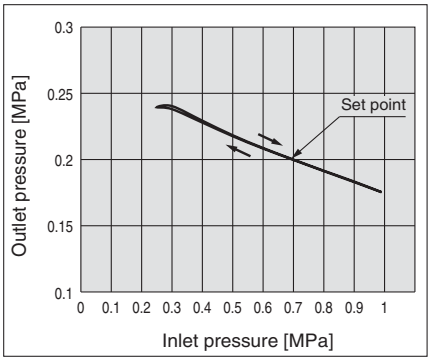

⚠ Specific Product Precautions

Be sure to read this before handling. Refer to the back cover for Safety Instructions, "Handling Precautions for SMC Products" and the Operation Manual for F.R.L. Precautions, http://www.smc.eu

Piping

⚠ Warning

1. When mounting a check valve, make sure the arrow (IN side) points in the correct direction of air flow.

Air Supply

⚠ Caution

1. Use an air filter with 5 μm or less filtration rating on the inlet side of the valve to avoid any damage to the seat caused by dust when mounting a pressure relief 3 port valve on the inlet side.

Mounting/Adjustment

⚠ Caution

1. When the bowl is installed on the air filter, filter regulator, lubricator, mist separator, or micro mist separator (AC25-A to AC40-A), install them so that the lock button lines up to the groove of the front (or the back) of the body to avoid drop or damage of the bowl.

Selection

⚠ Warning

1. Float type auto drain
   Operate under the following conditions to avoid malfunction.
   <N.O. type>
   · Operating compressor: 0.75 kW (100 L/min (ANR)) or more.
   When using 2 or more auto drains, multiply the value above by the number of auto drains to find the capacity of the compressors you will need.
   For example, when using 2 auto drains, 1.5 kW (200 L/min (ANR)) of the compressor capacity is required.
   · Operating pressure: 0.1 MPa or more
   <N.C. type>
   · Operating pressure for AD27-A: 0.1 MPa or more
   Operating pressure for AD37-A/AD47-A: 0.15 MPa or more
2. When a pressure release 3 port valve is mounted on the inlet side of the regulator or filter regulator, the residual pressure can be released to the inlet side. However, if the set pressure is 0.15 MPa or less, the residual pressure may not be released.
   When using the pressure release 3 port valve at a set pressure level of 0.15 MPa or less, it is recommended to use a regulator with backflow function.

⚠ Caution

1. When releasing air at the intermediate position using a T-spacer on the inlet side of the lubricator, lubricant may back flow. Therefore, releasing air that does not contain traces of lubricant is not possible.
   To release air that does not contain traces of lubricant, use a check valve (Series AKM) on the inlet side of the lubricator to prevent a backflow of the lubricant.
2. If a pressure relief 3 port valve is mounted on the inlet side of the lubricator, causing a backflow of air, it can result in a backflow of oil or damage to internal parts. Do not use it in this fashion.
3. An F.R.L. unit shipped from the plant has its model number labeled. However, components that are combined together during the distribution process do not have a label on them.

Dimensions

AC10-A/AC20-A

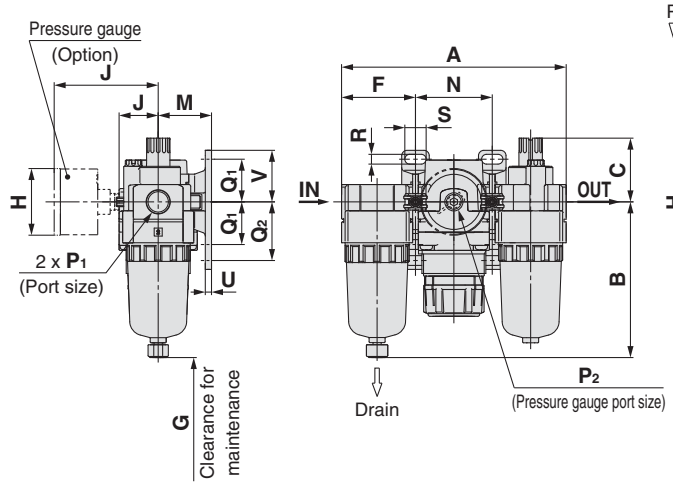

AC25-A to AC40-06-A

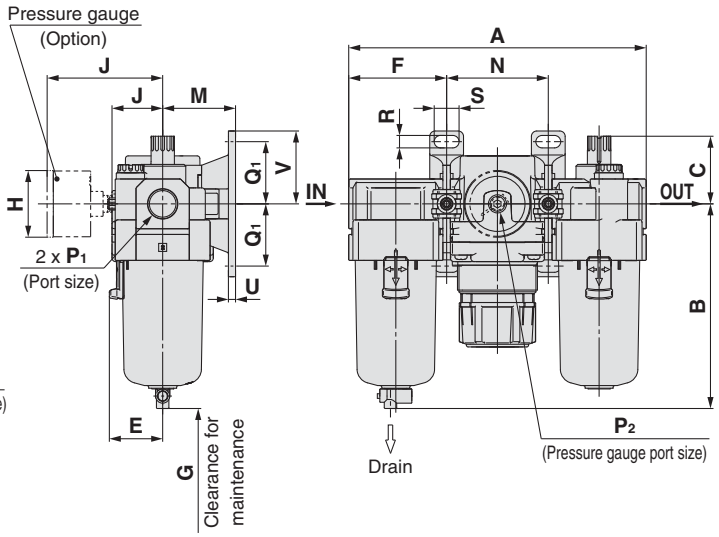

Applicable model	AC10-A/AC20-A		AC20-A		AC25-A to AC40-06-A
Optional/Semi-standard specifications	With auto drain (N.C.)	Metal bowl	With drain guide	Metal bowl with drain guide	With auto drain (N.O./N.C.)
Dimensions	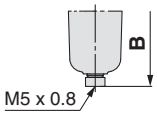	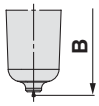	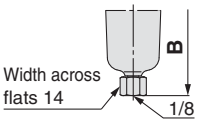	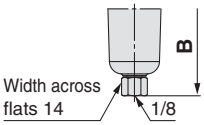	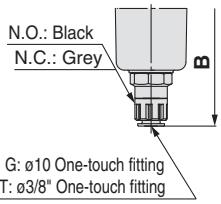

Applicable model	AC25-A to AC40-06-A					
Optional/Semi-standard specifications	Metal bowl	Metal bowl with drain guide	Metal bowl with level gauge	Metal bowl with level gauge, with drain guide	With drain guide	Drain cock with barb fitting
Dimensions	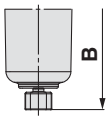	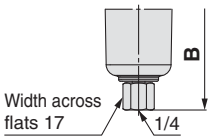	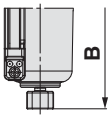	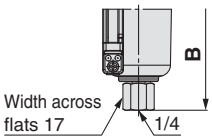	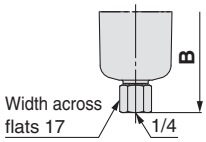	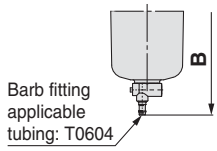

Model	Standard specifications																
	P_1	P_2	A	B	C	E	F	G	J	Bracket mount							
										M	N	Q_1	Q_2	R	S	U	V
AC10-A	M5 x 0.8	1/16	87	59.9	25.5	—	28	35	12.5	25	31	20	27	4.5	6.8	3	24.5
AC20-A	1/8, 1/4	1/8	126.4	87.6	35.9	—	41.6	60	23.4	30	43.2	24	33	5.5	12	3.5	29
AC25-A	1/4, 3/8	1/8	167.4	115.1	38.1	30	55.1	80	30.5	41	57.2	35	—	7	14	4	41
AC30-A	1/4, 3/8	1/8	167.4	115.1	38.1	30	55.1	80	30.5	41	57.2	35	—	7	14	4	41
AC40-A	1/4, 3/8, 1/2	1/8	220.4	147.1	39.8	38.4	72.6	110	36.1	50	75.2	40	—	9	18	5	48
AC40-06-A	3/4	1/8	235.4	149.1	37.8	38.4	77.6	110	39.6	50	80.2	40	—	9	18	5	48

Model	Optional specifications					Semi-standard specifications					
	Round type pressure gauge		Round type pressure gauge (with colour zone)		With auto drain	With barb fitting	With drain guide	Metal bowl	Metal bowl with drain guide	Metal bowl with level gauge	Metal bowl with level gauge, with drain guide
	H	J	H	J	B	B	B	B	B	B	B
AC10-A	ø26	26	—	—	77.9	—	—	59.3	—	—	—
AC20-A	ø37.5	58.5	ø37.5	59.5	104.9	—	91.4	87.4	93.9	—	—
AC25-A	ø37.5	58.5	ø37.5	59.5	156.8	123.6	121.9	117.6	122.1	137.6	142.1
AC30-A	ø37.5	65	ø37.5	66	156.8	123.6	121.9	117.6	122.1	137.6	142.1
AC40-A	ø42.5	72	ø42.5	72	186.9	155.6	153.9	149.6	154.1	169.6	174.1
AC40-06-A	ø42.5	72	ø42.5	72	188.9	157.6	155.9	151.6	156.1	171.6	176.1

Air Combination

Filter Regulator + Lubricator

AC10A-A to AC40A-A

Symbol

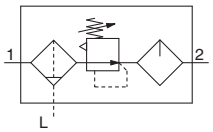

How to Order

AC 30 A– ☐ 03 DG – ☐ – ☐ –A

❶ ❷ ❸ ❹ ❺ ❻

- Option/Semi-standard: Select one each for **a** to **l**.
- Option/Attachment/Semi-standard symbol: When more than one specification is required, indicate in alphanumeric order.

Example) AC30A-F03DM-KSV-13NR-A

			Symbol	Description	❶ Body size 10	20	30	40
❷	Pipe thread type		—	Metric thread (M5)	●	—	—	—
				Rc	—	●	●	●
			N Note 1)	NPT	—	●	●	●
			F Note 2)	G	—	●	●	●
			+					
❸	Port size		M5	M5	●	—	—	—
			01	1/8	—	●	—	—
			02	1/4	—	●	●	●
			03	3/8	—	—	●	●
			04	1/2	—	—	—	●
			06	3/4	—	—	—	●
			+					
❹	Option Note 3)	a Float type auto drain	—	Without auto drain	●	●	●	●
			C Note 4)	N.C. (Normally closed) Drain port is closed when pressure is not applied.	●	●	●	●
			D Note 5)	N.O. (Normally open) Drain port is open when pressure is not applied.	—	—	●	●
			+					
		b Pressure gauge Note 6)	—	Without pressure gauge	●	●	●	●
			G	Round type pressure gauge (without limit indicator)	●	—	—	—
				Round type pressure gauge (with limit indicator)	—	●	●	●
			M	Round type pressure gauge (with colour zone)	—	●	●	●
			+					
❺	Attachment	c Check valve	—	Without attachment	●	●	●	●
			K	Mounting position: AW+**K**+AL	—	●	●	● Note 7)
			+					
		d Pressure switch	—	Without attachment	●	●	●	●
			S Note 8)	Mounting position: AW+**S**+AL	—	●	●	●
			+					
		e Pressure relief 3 port valve	—	Without attachment	●	●	●	●
			V	Mounting position: AW+AL+**V**	—	●	●	●
			+					
❻	Semi-standard	f Set pressure Note 9)	—	0.05 to 0.7 MPa setting	●	●	●	●
			1	0.02 to 0.2 MPa setting	●	●	●	●
			+					
		g Bowl Note 10)	—	Polycarbonate bowl	●	●	●	●
			2	Metal bowl	●	●	●	●
			6	Nylon bowl	●	●	●	●
			8	Metal bowl with level gauge	—	—	●	●
			C	With bowl guard	—	●	— Note 11)	— Note 11)
			6C	With bowl guard (Nylon bowl)	—	●	— Note 12)	— Note 12)
			+					
		h Filter regulator drain port Note 13)	—	With drain cock	●	●	●	●
			J Note 14)	Drain guide 1/8	—	●	—	—
				Drain guide 1/4	—	—	●	●
			W Note 15)	Drain cock with barb fitting (for ø6 x ø4 nylon tube)	—	—	●	●

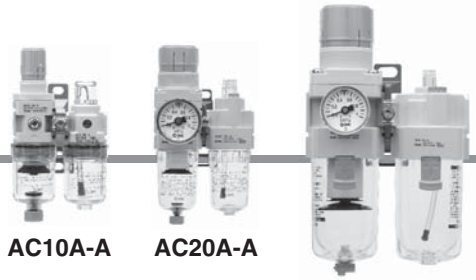

AC10A-A AC20A-A AC40A-A

			Symbol	Description	❶ Body size 10	20	30	40
❻ Semi-standard	i	Lubricator lubricant exhaust port	—	Without drain cock	●	●	●	●
			3 Note 16)	Lubricator with drain cock	●	●	●	●
			+					
	j	Exhaust mechanism	—	Relieving type	●	●	●	●
			N	Non-relieving type	●	●	●	●
			+					
	k	Flow direction	—	Flow direction: Left to right	●	●	●	●
			R	Flow direction: Right to left	●	●	●	●
			+					
	l	Pressure unit	—	Name plate and pressure gauge in imperial units: MPa	●	●	●	●
			Z Note 17)	Name plate, caution plate for bowl, and pressure gauge in imperial units: psi, °F	○ Note 18)	○ Note 18)	○ Note 18)	○ Note 18)

Note 1) Drain guide is NPT1/8 (applicable to the AC20A-A) and NPT1/4 (applicable to the AC30A-A to AC40A-A). The auto drain port comes with ø3/8" One-touch fitting (applicable to the AC30A-A to AC40A-A).
Note 2) Drain guide is G1/8 (applicable to the AC20A-A) and G1/4 (applicable to the AC30A-A to AC40A-A).
Note 3) Option G, M are not assembled and supplied loose at the time of shipment.
Note 4) When pressure is not applied, condensate which does not start the auto drain mechanism will be left in the bowl. Releasing the residual condensate before ending operations for the day is recommended.
Note 5) If the compressor is small (0.75 kW, discharge flow is less than 100 L/min[ANR]), air leakage from the drain cock may occur during start of operations. N.C. type is recommended.
Note 6) When the pressure gauge is attached, a 1.0 MPa pressure gauge will be fitted for standard (0.7 MPa) type. 0.4 MPa pressure gauge for 0.2 MPa type (1.0 MPa pressure gauge only for the AC10A-A).
Note 7) Not available with piping port size: 06
Note 8) The bracket position varies depending on the pressure switch mounting.
Note 9) Pressure can be set higher than the specification pressure in some cases, but use pressure within the specification range.
Note 10) Refer to Chemical data on page 38 for chemical resistance of the bowl.
Note 11) A bowl guard is provided as standard equipment (polycarbonate).
Note 12) A bowl guard is provided as standard equipment (nylon).
Note 13) Float type auto drain: The combination of C and D is not possible.
Note 14) Without a valve function
Note 15) The combination of metal bowl: 2 and 8 is not available.
Note 16) When choosing with W: Filter regulator drain port, the drain cock of a lubricator will be with barb fitting.
Note 17) For pipe thread type: M5, NPT. MPa and psi are shown together on the pressure unit. Cannot be used with M: Round pressure gauge (with colour zone). Available by request for special.
Note 18) ○: For pipe thread type: M5, NPT only

Standard Specifications

Model		AC10A-A	AC20A-A	AC30A-A	AC40A-A	AC40A-06-A
Component	Filter Regulator [AW]	AW10-A	AW20-A	AW30-A	AW40-A	AW40-06-A
	Lubricator [AL]	AL10-A	AL20-A	AL30-A	AL40-A	AL40-06-A
Port size		M5 x 0.8	1/8, 1/4	1/4, 3/8	1/4, 3/8, 1/2	3/4
Pressure gauge port size [AW]		1/16	1/8			
Fluid		Air				
Ambient and fluid temperature		–5 to 60 °C (with no freezing)				
Proof pressure		1.5 MPa				
Maximum operating pressure		1.0 MPa				
Set pressure range [AW]		0.05 to 0.7 MPa				
Nominal filtration rating [AW]		5 μm				
Recommended lubricant [AL]		Class 1 turbine oil (ISO VG32)				
Bowl material [AW/AL]		Polycarbonate				
Bowl guard [AW/AL]		—	Semi-standard (Steel)	Standard (Polycarbonate)		
Construction [AW]		Relieving type				
Weight [kg]		0.20	0.34	0.67	1.24	1.35

Dimensions

AC10A-A/AC20A-A

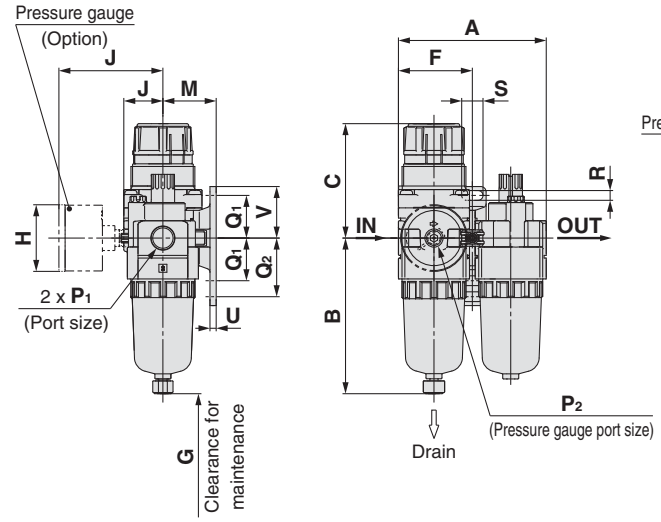

AC30A-A to AC40A-06-A

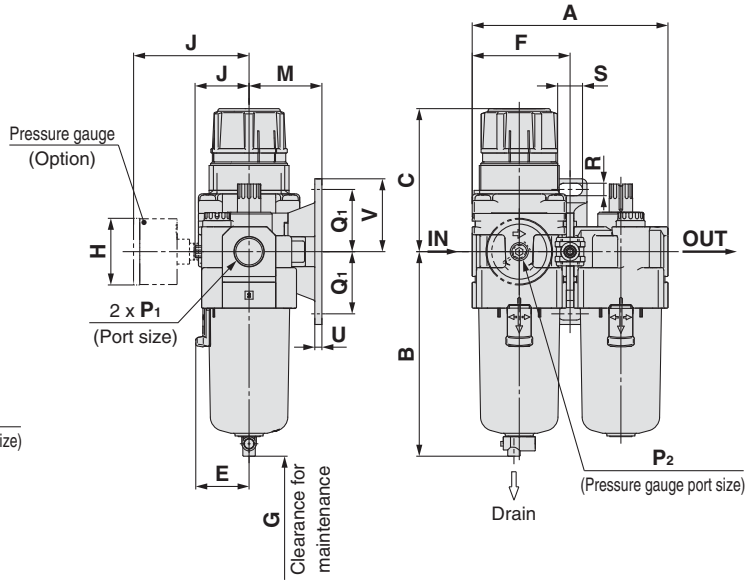

Applicable model	AC10A-A/AC20A-A		AC20A-A		AC30A-A to AC40A-06-A
Optional/Semi-standard specifications	With auto drain (N.C.)	Metal bowl	With drain guide	Metal bowl with drain guide	With auto drain (N.O./N.C.)
Dimensions	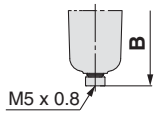	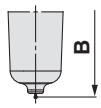	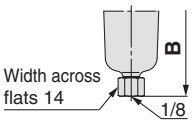	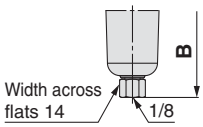	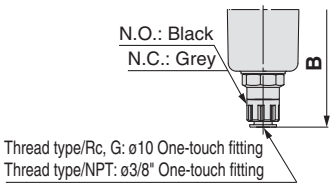

Applicable model	AC30A-A to AC40A-06-A					
Optional/Semi-standard specifications	Metal bowl	Metal bowl with drain guide	Metal bowl with level gauge	Metal bowl with level gauge, with drain guide	With drain guide	Drain cock with barb fitting
Dimensions	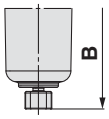	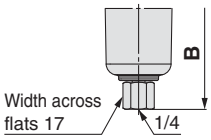	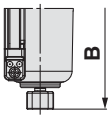	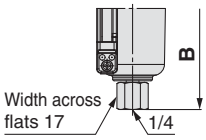	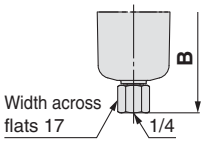	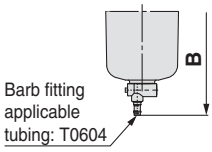

Model	Standard specifications															
	P_1	P_2	A	B	C Note)	E	F	G	J	Bracket mount						
										M	Q_1	Q_2	R	S	U	V
AC10A-A	M5 x 0.8	1/16	56	59.9	47.4	—	28	25	12.5	25	20	27	4.5	6.8	3	24.5
AC20A-A	1/8, 1/4	1/8	83.2	87.6	67.4	—	41.6	60	23.4	30	24	33	5.5	12	3.5	29
AC30A-A	1/4, 3/8	1/8	110.2	115.1	83.5	30	55.1	80	30.5	41	35	—	7	14	4	41
AC40A-A	1/4, 3/8, 1/2	1/8	145.2	147.1	100	38.4	72.6	110	36.1	50	40	—	9	18	5	48
AC40A-06-A	3/4	1/8	155.2	149.1	101.5	38.4	77.6	110	39.6	50	40	—	9	18	5	48

Model	Optional specifications					Semi-standard specifications					
	Round type pressure gauge		Round type pressure gauge (with colour zone)		With auto drain	With barb fitting	With drain guide	Metal bowl	Metal bowl with drain guide	Metal bowl with level gauge	Metal bowl with level gauge, with drain guide
	H	J	H	J	B	B	B	B	B	B	B
AC10A-A	ø26	26	—	—	77.9	—	—	59.3	—	—	—
AC20A-A	ø37.5	58.5	ø37.5	59.5	104.9	—	91.4	87.4	93.9	—	—
AC30A-A	ø37.5	65	ø37.5	66	156.8	123.6	121.9	117.6	122.1	137.6	142.1
AC40A-A	ø42.5	72	ø42.5	72	186.9	155.6	153.9	149.6	154.1	169.6	174.1
AC40A-06-A	ø42.5	72	ø42.5	72	188.9	157.6	155.9	151.6	156.1	171.6	176.1

Note) The dimension of C is the length when the filter regulator knob is unlocked.

Air Combination

Air Filter + Regulator

AC10B-A to AC40B-A

Symbol

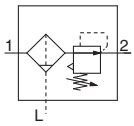

How to Order

AC 30 B– ☐ 03 DG – ☐ – ☐ –A

❶ ❷ ❸ ❹ ❺ ❻

- Option/Semi-standard: Select one each for **a** to **j**.
- Option/Attachment/Semi-standard symbol: When more than one specification is required, indicate in alphanumeric order.

Example) AC30B-F03DM-SV-1NR-A

			Symbol	Description	❶ Body size 10	20	25	30	40
❷	Pipe thread type		—	Metric thread (M5)	●	—	—	—	—
				Rc	—	●	●	●	●
			N Note 1)	NPT	—	●	●	●	●
			F Note 2)	G	—	●	●	●	●
			+						
❸	Port size		M5	M5	●	—	—	—	—
			01	1/8	—	●	—	—	—
			02	1/4	—	●	●	●	●
			03	3/8	—	—	●	●	●
			04	1/2	—	—	—	—	●
			06	3/4	—	—	—	—	●
			+						
❹	Option Note 3)	a Float type auto drain	—	Without auto drain	●	●	●	●	●
			C Note 4)	N.C. (Normally closed) Drain port is closed when pressure is not applied.	●	●	●	●	●
			D Note 5)	N.O. (Normally open) Drain port is open when pressure is not applied.	—	—	●	●	●
			+						
		b Pressure gauge Note 6)	—	Without pressure gauge	●	●	●	●	●
			G	Round type pressure gauge (without limit indicator)	●	—	—	—	—
				Round type pressure gauge (with limit indicator)	—	●	●	●	●
			M	Round type pressure gauge (with colour zone)	—	●	●	●	●
			+						
❺	Attachment	c Pressure switch	—	Without attachment	●	●	●	●	●
			S Note 7)	Mounting position: AF+**S**+AR	—	●	●	●	●
		T-spacer	T Note 7)	Mounting position: AF+**T**+AR	●	●	●	●	●
			+						
		d Pressure relief 3 port valve	—	Without attachment	●	●	●	●	●
			V	Mounting position: AF+AR+**V**	—	●	●	●	●
			V1 Note 8)	Mounting position: **V**+AF+AR	—	●	●	●	●
			+						
❻	Semi-standard	e Set pressure Note 9)	—	0.05 to 0.7 MPa setting	●	●	●	●	●
			1	0.02 to 0.2 MPa setting	●	●	●	●	●
			+						
		f Bowl Note 10)	—	Polycarbonate bowl	●	●	●	●	●
			2	Metal bowl	●	●	●	●	●
			6	Nylon bowl	●	●	●	●	●
			8	Metal bowl with level gauge	—	—	●	●	●
			C	With bowl guard	—	●	— Note 11)	— Note 11)	— Note 11)
			6C	With bowl guard (Nylon bowl)	—	●	— Note 12)	— Note 12)	— Note 12)
			+						
		g Air filter drain port Note 13)	—	With drain cock	●	●	●	●	●
			J Note 14)	Drain guide 1/8	—	●	—	—	—
				Drain guide 1/4	—	—	●	●	●
			W Note 15)	Drain cock with barb fitting (for ø6 x ø4 nylon tube)	—	—	●	●	●

AC10B-A

AC20B-A

AC40B-A

			Symbol	Description	❶ Body size 10	20	25	30	40
❻ Semi-standard	h	Exhaust mechanism	—	Relieving type	●	●	●	●	●
			N	Non-relieving type	●	●	●	●	●
			+						
	i	Flow direction	—	Flow direction: Left to right	●	●	●	●	●
			R	Flow direction: Right to left	●	●	●	●	●
			+						
	j	Pressure unit	—	Name plate and pressure gauge in imperial units: MPa	●	●	●	●	●
			Z Note 16)	Name plate, caution plate for bowl, and pressure gauge in imperial units: psi, °F	○ Note 17)	○ Note 17)	○ Note 17)	○ Note 17)	○ Note 17)

Note 1) Drain guide is NPT1/8 (applicable to the AC20B-A) and NPT1/4 (applicable to the AC25B-A to AC40B-A). The auto drain port comes with ø3/8" One-touch fitting (applicable to the AC25B-A to AC40B-A).
Note 2) Drain guide is G1/8 (applicable to the AC20B-A) and G1/4 (applicable to the AC25B-A to AC40B-A).
Note 3) Option G, M are not assembled and supplied loose at the time of shipment.
Note 4) When pressure is not applied, condensate which does not start the auto drain mechanism will be left in the bowl. Releasing the residual condensate before ending operations for the day is recommended.
Note 5) If the compressor is small (0.75 kW, discharge flow is less than 100 L/min[ANR]), air leakage from the drain cock may occur during start of operations. N.C. type is recommended.
Note 6) When the pressure gauge is attached, a 1.0 MPa pressure gauge will be fitted for standard (0.7 MPa) type. 0.4 MPa pressure gauge for 0.2 MPa type (1.0 MPa pressure gauge only for the AC10B-A).
Note 7) The bracket position varies depending on the T-spacer or pressure switch mounting.
Note 8) Make sure that the outlet pressure is released to atmospheric pressure using a pressure gauge. For V1 specification, use the regulator with a set pressure of 0.15 MPa or more to ensure the pressure release.
Note 9) Pressure can be set higher than the specification pressure in some cases, but use pressure within the specification range.
Note 10) Refer to Chemical data on page 38 for chemical resistance of the bowl.
Note 11) A bowl guard is provided as standard equipment (polycarbonate).
Note 12) A bowl guard is provided as standard equipment (nylon).
Note 13) Float type auto drain: The combination of C and D is not possible.
Note 14) Without a valve function
Note 15) The combination of metal bowl: 2 and 8 is not available.
Note 16) For pipe thread type: M5, NPT. MPa and psi are shown together on the pressure unit. Cannot be used with M: Round pressure gauge (with colour zone). Available by request for special.
Note 17) ○: For pipe thread type: M5, NPT only

Standard Specifications

Model		AC10B-A	AC20B-A	AC25B-A	AC30B-A	AC40B-A	AC40B-06-A
Component	Air Filter [AF]	AF10-A	AF20-A	AF30-A	AF30-A	AF40-A	AF40-06-A
	Regulator [AR]	AR10-A	AR20-A	AR25-A	AR30-A	AR40-A	AR40-06-A
Port size		M5 x 0.8	1/8, 1/4	1/4, 3/8	1/4, 3/8	1/4, 3/8, 1/2	3/4
Pressure gauge port size [AR]		1/16	1/8				
Fluid		Air					
Ambient and fluid temperature		–5 to 60 °C (with no freezing)					
Proof pressure		1.5 MPa					
Maximum operating pressure		1.0 MPa					
Set pressure range [AR]		0.05 to 0.7 MPa					
Nominal filtration rating [AF]		5 μm					
Bowl material [AF]		Polycarbonate					
Bowl guard [AF]		—	Semi-standard (Steel)	Standard (Polycarbonate)			
Construction [AR]		Relieving type					
Weight [kg]		0.16	0.28	0.43	0.58	1.05	1.12

Dimensions

AC10B-A/AC20B-A

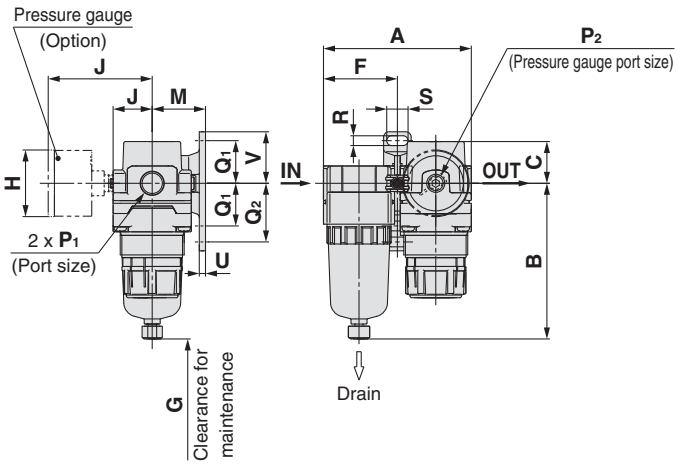

AC25B-A to AC40B-06-A

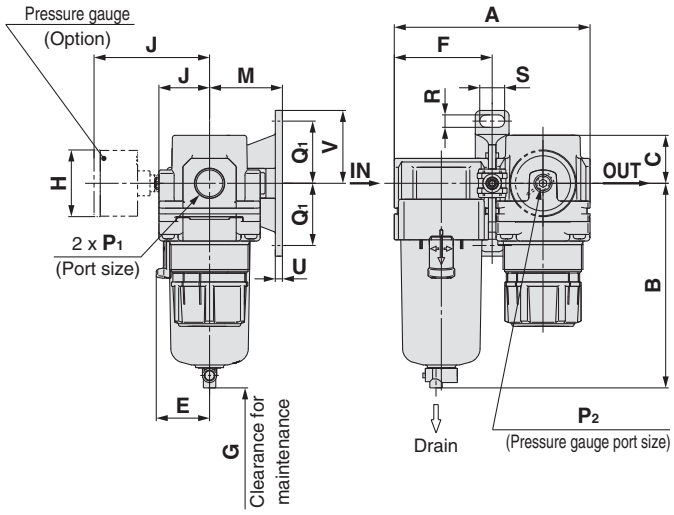

Applicable model	AC10B-A/AC20B-A		AC20B-A		AC25B-A to AC40B-06-A
Optional/Semi-standard specifications	With auto drain (N.C.)	Metal bowl	With drain guide	Metal bowl with drain guide	With auto drain (N.O./N.C.)
Dimensions	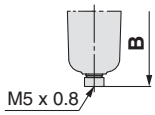	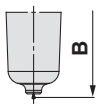	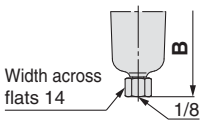	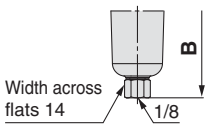	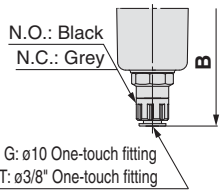

Applicable model	AC25B-A to AC40B-06-A					
Optional/Semi-standard specifications	Metal bowl	Metal bowl with drain guide	Metal bowl with level gauge	Metal bowl with level gauge, with drain guide	With drain guide	Drain cock with barb fitting
Dimensions	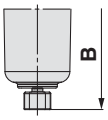	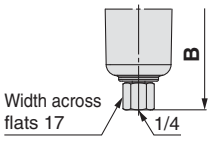	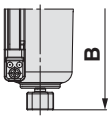	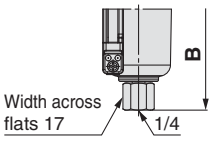	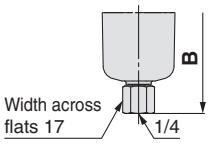	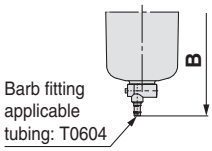

Model	Standard specifications															
	P_1	P_2	A	B	C	E	F	G	J	Bracket mount						
										M	Q_1	Q_2	R	S	U	V
AC10B-A	M5 x 0.8	1/16	56	59.9	11	—	28	25	12.5	25	20	27	4.5	6.8	3	24.5
AC20B-A	1/8, 1/4	1/8	83.2	87.6	23.5	—	41.6	25	23.4	30	24	33	5.5	12	3.5	29
AC25B-A	1/4, 3/8	1/8	110.2	115.1	23.5	30	55.1	35	30.5	41	35	—	7	14	4	41
AC30B-A	1/4, 3/8	1/8	110.2	115.1	27	30	55.1	35	30.5	41	35	—	7	14	4	41
AC40B-A	1/4, 3/8, 1/2	1/8	145.2	147.1	33.5	38.4	72.6	40	36.1	50	40	—	9	18	5	48
AC40B-06-A	3/4	1/8	155.2	149.1	33.5	38.4	77.6	40	39.6	50	40	—	9	18	5	48

Model	Optional specifications					Semi-standard specifications					
	Round type pressure gauge		Round type pressure gauge (with colour zone)		With auto drain	With barb fitting	With drain guide	Metal bowl	Metal bowl with drain guide	Metal bowl with level gauge	Metal bowl with level gauge, with drain guide
	H	J	H	J	B	B	B	B	B	B	B
AC10B-A	ø26	26	—	—	77.9	—	—	59.3	—	—	—
AC20B-A	ø37.5	58.5	ø37.5	59.5	104.9	—	91.4	87.4	93.9	—	—
AC25B-A	ø37.5	58.5	ø37.5	59.5	156.8	123.6	121.9	117.6	122.1	137.6	142.1
AC30B-A	ø37.5	65	ø37.5	66	156.8	123.6	121.9	117.6	122.1	137.6	142.1
AC40B-A	ø42.5	72	ø42.5	72	186.9	155.6	153.9	149.6	154.1	169.6	174.1
AC40B-06-A	ø42.5	72	ø42.5	72	188.9	157.6	155.9	151.6	156.1	171.6	176.1

Air Combination

Air Filter + Mist Separator + Regulator

AC20C-A to AC40C-A

Symbol

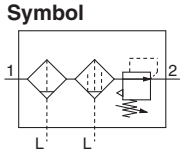

How to Order

AC 30 C– ☐ 03 DG – ☐ – ☐ –A

❶ ❷ ❸ ❹ ❺ ❻

- Option/Semi-standard: Select one each for **a** to **j**.
- Option/Attachment/Semi-standard symbol: When more than one specification is required, indicate in alphanumeric order.

Example) AC30C-F03DM-SV-1NR-A

			Symbol	Description	❶ Body size 20	25	30	40
❷	Pipe thread type		—	Rc	●	●	●	●
			N	NPT	●	●	●	●
			F	G	●	●	●	●
			+					
❸	Port size		01	1/8	●	—	—	—
			02	1/4	●	●	●	●
			03	3/8	—	●	●	●
			04	1/2	—	—	—	●
			06	3/4	—	—	—	●
			+					
❹	Option Note 1)	a Float type auto drain	—	Without auto drain	●	●	●	●
			C Note 2)	N.C. (Normally closed) Drain port is closed when pressure is not applied.	●	●	●	●
			D Note 3)	N.O. (Normally open) Drain port is open when pressure is not applied.	—	●	●	●
			+					
		b Pressure gauge Note 4)	—	Without pressure gauge	●	●	●	●
			G	Round type pressure gauge (with limit indicator)	●	●	●	●
			M	Round type pressure gauge (with colour zone)	●	●	●	●
			+					
❺	Attachment	c Pressure switch	—	Without attachment	●	●	●	●
			S Note 5)	Mounting position: AF+AFM+**S**+AR	●	●	●	●
		T-spacer	T Note 5)	Mounting position: AF+AFM+**T**+AR	●	●	●	●
			+					
		d Pressure relief 3 port valve	—	Without attachment	●	●	●	●
			V	Mounting position: AF+AFM+AR+**V**	●	●	●	●
			V1 Note 6)	Mounting position: **V**+AF+AFM+AR	●	●	●	●
			+					
❻	Semi-standard	e Set pressure Note 7)	—	0.05 to 0.7 MPa setting	●	●	●	●
			1	0.02 to 0.2 MPa setting	●	●	●	●
			+					
		f Bowl	—	Polycarbonate bowl	●	●	●	●
			2	Metal bowl	●	●	●	●
			6	Nylon bowl	●	●	●	●
			8	Metal bowl with level gauge	—	●	●	●
			C	With bowl guard	●	—	—	—
			6C	With bowl guard (Nylon bowl)	●	—	—	—
			+					
		g Filter Mist separator drain port	—	With drain cock	●	●	●	●
			J Note 8)	Drain guide 1/8	●	—	—	—
				Drain guide 1/4	—	●	●	●
			W Note 11)	Drain cock with barb fitting (for ø6 x ø4 nylon tube)	—	●	●	●
			+					
		h Exhaust mechanism	—	Relieving type	●	●	●	●
			N	Non-relieving type	●	●	●	●

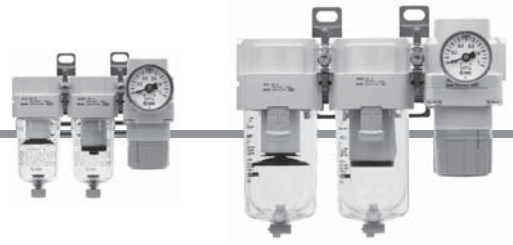

AC20C-A AC40C-A

		Symbol	Description	❶ Body size 20	25	30	40
❻ Semi-standard	i Flow direction	—	Flow direction: Left to right	●	●	●	●
		R	Flow direction: Right to left	●	●	●	●
		+					
	j Pressure unit	—	Name plate and pressure gauge in imperial units: MPa	●	●	●	●
		Z Note 9)	Name plate, caution plate for bowl, and pressure gauge in imperial units: psi, °F	○ Note 10)	○ Note 10)	○ Note 10)	○ Note 10)

Note 1) Option G, M are not assembled and supplied loose at the time of shipment.
Note 2) When pressure is not applied, condensate which does not start the auto drain mechanism will be left in the bowl. Releasing the residual condensate before ending operations for the day is recommended.
Note 3) If the compressor is small (0.75 kW, discharge flow is less than 100 L/min[ANR]), air leakage from the drain cock may occur during start of operations. N.C. type is recommended.
Note 4) When the pressure gauge is attached, a 1.0 MPa pressure gauge will be fitted for standard (0.7 MPa) type. 0.4 MPa pressure gauge for 0.2 MPa type.
Note 5) The bracket position varies depending on the T-spacer or pressure switch mounting.
Note 6) Make sure that the outlet pressure is released to atmospheric pressure using a pressure gauge.
For V1 specification, use the regulator with a set pressure of 0.15 MPa or more to ensure the pressure release.
Note 7) Pressure can be set higher than the specification pressure in some cases, but use pressure within the specification range.
Note 8) Without a valve function
Note 9) For pipe thread type: NPT. MPa and psi are shown together on the pressure unit.
Cannot be used with M: Round pressure gauge (with colour zone). Available by request for special.
Note 10) ○: For pipe thread type: NPT only
Note 11) The combination of metal bowl: 2 and 8 is not available.

Standard Specifications

Model		AC20C-A	AC25C-A	AC30C-A	AC40C-A	AC40C-06-A
Component	Air Filter [AF]	AF20-A	AF30-A	AF30-A	AF40-A	AF40-06-A
	Mist Separator [AFM]	AFM20-A	AFM30-A	AFM30-A	AFM40-A	AFM40-06-A
	Regulator [AR]	AR20-A	AR25-A	AR30-A	AR40-A	AR40-06-A
Port size		1/8, 1/4	1/4, 3/8	1/4, 3/8	1/4, 3/8, 1/2	3/4
Pressure gauge port size [AR]		1/8				
Fluid		Air				
Ambient and fluid temperature		– 5 to 60°C (with no freezing)				
Proof pressure		1.5 MPa				
Maximum operating pressure		1.0 MPa				
Minimum operating pressure		0.05 MPa				
Set pressure range [AR]		0.05 to 0.7 MPa				
Nominal filtration rating [AF/AFM]		AF: 5 μm, AFM: 0.3 μm (99.9% filtered particle size)				
Outlet side oil mist concentration [AFM]		MAX 1.0 mg/m³ (ANR) (≈ 0.8 ppm) Note 2) Note 3)				
Rated flow [L/min (ANR)] [AFM] Note 1)		200	450	450	1100	1100
Bowl material [AF/AFM]		Polycarbonate				
Bowl guard [AF/AFM]		Semi-standard (Steel)	Standard (Polycarbonate)			
Construction [AR]		Relieving type				
Weight [kg]		0.39	0.67	0.82	1.53	1.66

Note 1) Conditions: Mist separator inlet pressure: 0.7 MPa; The rated flow varies depending on the inlet pressure.
Keep the air flow within the rated flow to prevent an outflow of lubricant to the outlet side.
Note 2) When the compressor oil mist discharge concentration is 30 mg/m³ (ANR).
Note 3) Bowl seal and other O-rings are slightly lubricated.

Dimensions

AC20C-A

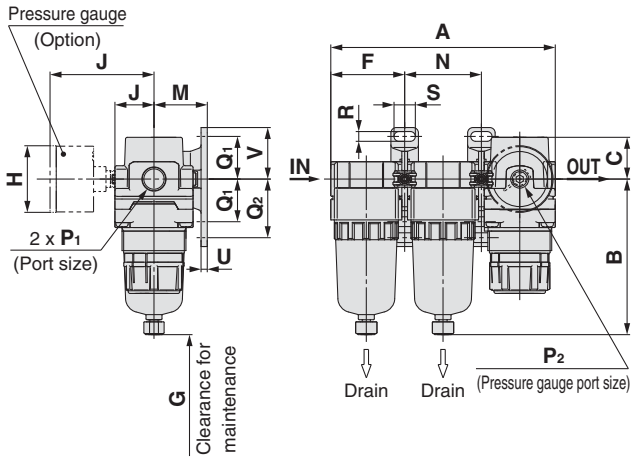

AC25C-A to AC40C-06-A

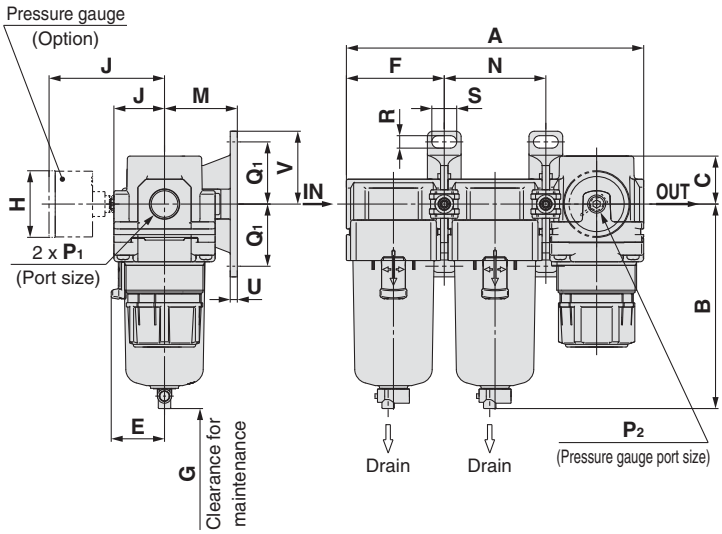

Applicable model	AC20C-A				AC25C-A to AC40C-06-A
Optional/Semi-standard specifications	With auto drain (N.C.)	With drain guide	Metal bowl	Metal bowl with drain guide	With auto drain (N.O./N.C.)
Dimensions	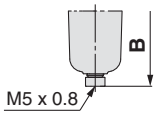	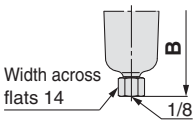	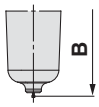	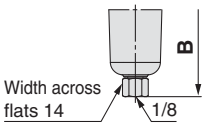	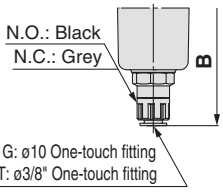

Applicable model	AC25C-A to AC40C-06-A					
Optional/Semi-standard specifications	Metal bowl	Metal bowl with drain guide	Metal bowl with level gauge	Metal bowl with level gauge, with drain guide	With drain guide	Drain cock with barb fitting
Dimensions	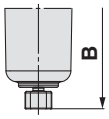	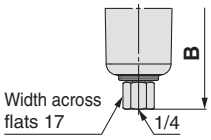	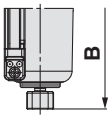	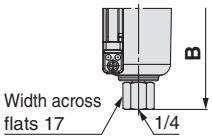	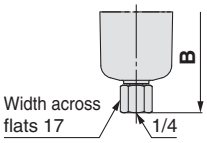	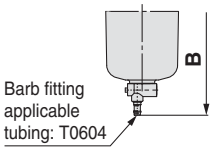

Model	Standard specifications																
	P_1	P_2	A	B	C	E	F	G	J	Bracket mount							
										M	N	Q_1	Q_2	R	S	U	V
AC20C-A	1/8, 1/4	1/8	126.4	87.6	23.5	—	41.6	40	23.4	30	43.2	24	33	5.5	12	3.5	29
AC25C-A	1/4, 3/8	1/8	167.4	115.1	23.5	30	55.1	50	30.5	41	57.2	35	—	7	14	4	41
AC30C-A	1/4, 3/8	1/8	167.4	115.1	27	30	55.1	50	30.5	41	57.2	35	—	7	14	4	41
AC40C-A	1/4, 3/8, 1/2	1/8	220.4	147.1	33.5	38.4	72.6	75	36.1	50	75.2	40	—	9	18	5	48
AC40C-06-A	3/4	1/8	235.4	149.1	33.5	38.4	77.6	75	39.6	50	80.2	40	—	9	18	5	48

Model	Optional specifications					Semi-standard specifications					
	Round type pressure gauge		Round type pressure gauge (with colour zone)		With auto drain	With barb fitting	With drain guide	Metal bowl	Metal bowl with drain guide	Metal bowl with level gauge	Metal bowl with level gauge, with drain guide
	H	J	H	J	B	B	B	B	B	B	B
AC20C-A	ø37.5	58.5	ø37.5	59.5	104.9	—	91.4	87.4	93.9	—	—
AC25C-A	ø37.5	58.5	ø37.5	59.5	156.8	123.6	121.9	117.6	122.1	137.6	142.1
AC30C-A	ø37.5	65	ø37.5	66	156.8	123.6	121.9	117.6	122.1	137.6	142.1
AC40C-A	ø42.5	72	ø42.5	72	186.9	155.6	153.9	149.6	154.1	169.6	174.1
AC40C-06-A	ø42.5	72	ø42.5	72	188.9	157.6	155.9	151.6	156.1	171.6	176.1

Air Combination

Filter Regulator + Mist Separator

AC20D-A to AC40D-A

Symbol

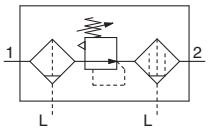

How to Order

AC 30 D– ☐ 03 DG – ☐ – ☐ –A

❶ ❷ ❸ ❹ ❺ ❻

- Option/Semi-standard: Select one each for **a** to **j**.
- Option/Attachment/Semi-standard symbol: When more than one specification is required, indicate in alphanumeric order.

Example) AC30D-F03DM-SV-1NR-A

			Symbol	Description	❶ Body size 20	30	40
❷	Pipe thread type		—	Rc	●	●	●
			N	NPT	●	●	●
			F	G	●	●	●
			+				
❸	Port size		01	1/8	●	—	—
			02	1/4	●	●	●
			03	3/8	—	●	●
			04	1/2	—	—	●
			06	3/4	—	—	●
			+				
❹	Option Note 1)	a Float type auto drain	—	Without auto drain	●	●	●
			C Note 2)	N.C. (Normally closed) Drain port is closed when pressure is not applied.	●	●	●
			D Note 3)	N.O. (Normally open) Drain port is open when pressure is not applied.	—	●	●
			+				
		b Pressure gauge Note 4)	—	Without pressure gauge	●	●	●
			G	Round type pressure gauge (with limit indicator)	●	●	●
			M	Round type pressure gauge (with colour zone)	●	●	●
			+				
❺	Attachment	c Pressure switch	—	Without attachment	●	●	●
			S Note 5)	Mounting position: AW+**S**+AFM	●	●	●
			+				
		d Pressure relief 3 port valve	—	Without attachment	●	●	●
			V	Mounting position: AW+AFM+**V**	●	●	●
			V1 Note 6)	Mounting position: **V**+AW+AFM	●	●	●
			+				
❻	Semi-standard	e Set pressure Note 7)	—	0.05 to 0.7 MPa setting	●	●	●
			1	0.02 to 0.2 MPa setting	●	●	●
			+				
		f Bowl	—	Polycarbonate bowl	●	●	●
			2	Metal bowl	●	●	●
			6	Nylon bowl	●	●	●
			8	Metal bowl with level gauge	—	●	●
			C	With bowl guard	●	—	—
			6C	With bowl guard (Nylon bowl)	●	—	—
			+				
		g Filter regulator Mist separator drain port	—	With drain cock	●	●	●
			J Note 8)	Drain guide 1/8	●	—	—
				Drain guide 1/4	—	●	●
			W Note 11)	Drain cock with barb fitting (for ø6 x ø4 nylon tube)	—	●	●
			+				
		h Exhaust mechanism	—	Relieving type	●	●	●
			N	Non-relieving type	●	●	●
			+				
		i Flow direction	—	Flow direction: Left to right	●	●	●
			R	Flow direction: Right to left	●	●	●

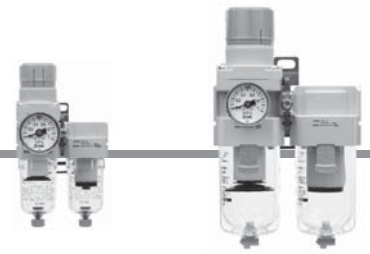

AC20D-A **AC40D-A**

	Symbol	Description	❶ Body size 20	30	40
❻ Semi-standard j Pressure unit	—	Name plate and pressure gauge in imperial units: MPa	●	●	●
	Z Note 9)	Name plate, caution plate for bowl, and pressure gauge in imperial units: psi, °F	○ Note 10)	○ Note 10)	○ Note 10)

Note 1) Option G, M are not assembled and supplied loose at the time of shipment.
Note 2) When pressure is not applied, condensate which does not start the auto drain mechanism will be left in the bowl. Releasing the residual condensate before ending operations for the day is recommended.
Note 3) If the compressor is small (0.75 kW, discharge flow is less than 100 L/min[ANR]), air leakage from the drain cock may occur during start of operations. N.C. type is recommended.
Note 4) When the pressure gauge is attached, a 1.0 MPa pressure gauge will be fitted for standard (0.7 MPa) type. 0.4 MPa pressure gauge for 0.2 MPa type.
Note 5) The bracket position varies depending on the pressure switch mounting.
Note 6) Make sure that the outlet pressure is released to atmospheric pressure using a pressure gauge.
For V1 specification, use the regulator with a set pressure of 0.15 MPa or more to ensure the pressure release.
Note 7) Pressure can be set higher than the specification pressure in some cases, but use pressure within the specification range.
Note 8) Without a valve function
Note 9) For pipe thread type: NPT. MPa and psi are shown together on the pressure unit.
Cannot be used with M: Round pressure gauge (with colour zone). Available by request for special.
Note 10) ○: For pipe thread type: NPT only
Note 11) The combination of metal bowl: 2 and 8 is not available.

Standard Specifications

Model		AC20D-A	AC30D-A	AC40D-A	AC40D-06-A
Component	Filter Regulator [AW]	AW20-A	AW30-A	AW40-A	AW40-06-A
	Mist Separator [AFM]	AFM20-A	AFM30-A	AFM40-A	AFM40-06-A
Port size		1/8, 1/4	1/4, 3/8	1/4, 3/8, 1/2	3/4
Pressure gauge port size [AW]		1/8			
Fluid		Air			
Ambient and fluid temperature		– 5 to 60°C (with no freezing)			
Proof pressure		1.5 MPa			
Maximum operating pressure		1.0 MPa			
Minimum operating pressure		0.05 MPa			
Set pressure range [AW]		0.05 to 0.7 MPa			
Nominal filtration rating [AW/AFM]		AW: 5 μm, AFM: 0.3 μm (99.9% filtered particle size)			
Rated flow [L/min (ANR)] [AFM] Note 1)		150	330	800	800
Outlet side oil mist concentration [AFM] Note 2) 3)		MAX 1.0 mg/m³ (ANR) (≈ 0.8 ppm)			
Bowl material [AW/AFM]		Polycarbonate			
Bowl guard [AW/AFM]		Semi-standard (Steel)	Standard (Polycarbonate)		
Construction [AW]		Relieving type			
Weight [kg]		0.33	0.66	1.24	1.35

Note 1) Conditions: Mist separator inlet pressure: 0.5 MPa; The rated flow varies depending on the inlet pressure.
Keep the air flow within the rated flow to prevent an outflow of lubricant to the outlet side.
Note 2) When the compressor oil mist discharge concentration is 30 mg/m³ (ANR).
Note 3) Bowl seal and other O-rings are slightly lubricated.

Dimensions

AC20D-A

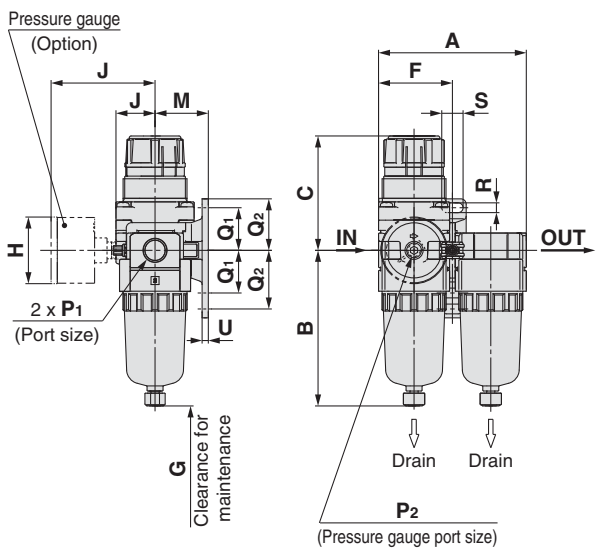

AC30D-A to AC40D-06-A

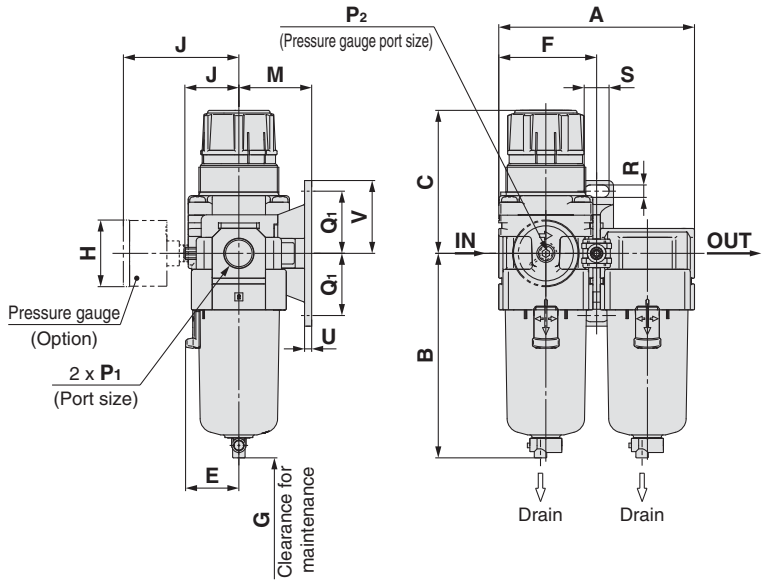

Applicable model	AC20D-A				AC30D-A to AC40D-06-A
Optional/Semi-standard specifications	With auto drain (N.C.)	With drain guide	Metal bowl	Metal bowl with drain guide	With auto drain (N.O./N.C.)
Dimensions	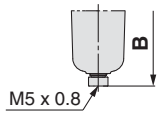	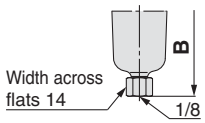	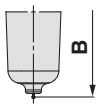	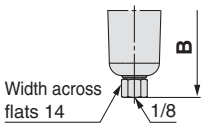	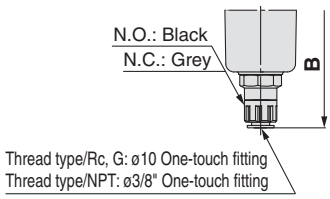

Applicable model	AC30D-A to AC40D-06-A					
Optional/Semi-standard specifications	Metal bowl	Metal bowl with drain guide	Metal bowl with level gauge	Metal bowl with level gauge, with drain guide	With drain guide	Drain cock with barb fitting
Dimensions	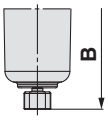	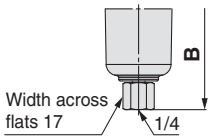	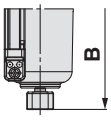	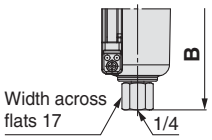	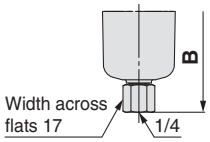	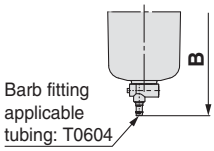

Model	Standard specifications															
	P_1	P_2	A	B	C Note)	E	F	G	J	Bracket mount						
										M	Q_1	Q_2	R	S	U	V
AC20D-A	1/8, 1/4	1/8	83.2	87.6	67.4	—	41.6	40	23.4	30	24	33	5.5	12	3.5	29
AC30D-A	1/4, 3/8	1/8	110.2	115.1	83.5	30	55.1	50	30.5	41	35	—	7	14	4	41
AC40D-A	1/4, 3/8, 1/2	1/8	145.2	147.1	100	38.4	72.6	75	36.1	50	40	—	9	18	5	48
AC40D-06-A	3/4	1/8	155.2	149.1	101.5	38.4	77.6	75	39.6	50	40	—	9	18	5	48

Model	Optional specifications					Semi-standard specifications					
	Round type pressure gauge		Round type pressure gauge (with colour zone)		With auto drain	With barb fitting	With drain guide	Metal bowl	Metal bowl with drain guide	Metal bowl with level gauge	Metal bowl with level gauge, with drain guide
	H	J	H	J	B	B	B	B	B	B	B
AC20D-A	ø37.5	58.5	ø37.5	59.5	104.9	—	91.4	87.4	93.9	—	—
AC30D-A	ø37.5	65	ø37.5	66	156.8	123.6	121.9	117.6	122.1	137.6	142.1
AC40D-A	ø42.5	72	ø42.5	72	186.9	155.6	153.9	149.6	154.1	169.6	174.1
AC40D-06-A	ø42.5	72	ø42.5	72	188.9	157.6	155.9	151.6	156.1	171.6	176.1

Note) The dimension of C is the length when the filter regulator knob is unlocked.

Air Combination
Series AC
Options/Attachments

Options/Attachments/Part No.

Section	Type \ Model		Part no.					
			For AC10-A	For AC20-A	For AC25-A	For AC30-A	For AC40-A	For AC40-06-A
			For AC10A-A	For AC20A-A	—	For AC30A-A	For AC40A-A	For AC40A-06-A
			For AC10B-A	For AC20B-A	For AC25B-A	For AC30B-A	For AC40B-A	For AC40B-06-A
			—	For AC20C-A	For AC25C-A	For AC30C-A	For AC40C-A	For AC40C-06-A
			—	For AC20D-A	—	For AC30D-A	For AC40D-A	For AC40D-06-A
Option	Pressure gauge Note 1) Round type	Standard	G27-10-R1	G36-10-□01			G46-10-□01	
		0.02 to 0.2 MPa setting	G27-10-R1 Note 2)	G36-4-□01			G46-4-□01	
	Round type (with colour zone)	Standard	—	G36-10-□01-L			G46-10-□01-L	
		0.02 to 0.2 MPa setting	—	G36-4-□01-L			G46-4-□01-L	
Attachment	Spacer		Y100-A	Y200-A	Y300-A		Y400-A	Y500-A
	Spacer with bracket		Y100T-A	Y200T-A	Y300T-A		Y400T-A	Y500T-A
	Check valve Note 3) Note 4)		—	AKM2000-□01-A (□02)-A	AKM3000-(□01)-A □02-A		AKM4000-(□02)-A □03-A	—
	Pressure switch Note 4)		—	IS10M-20-A	IS10M-30-A		IS10M-40-A	IS10M-50-A
	T-spacer Note 3) Note 4)		Y110-M5-A	Y210-□01-A (□02)-A	Y310-(□01)-A □02-A		Y410-(□02)-A □03-A	Y510-(□02)-A □03-A
	Pressure relief 3 port valve Note 4)		—	VHS20-□01A □02A	VHS30-□02A □03A		□02A VHS40-□03A □04A	VHS40-□06A
	Piping adapter Note 4)		E100-M5-A	□01-A E200-□02-A □03-A	□02-A E300-□03-A □04-A		□02-A E400-□03-A □04-A □06-A	E500-□06-A
	Pressure switch with piping adapter Note 4)		—	□01-A IS10E-20□02-A □03-A	□02-A IS10E-30□03-A □04-A		□02-A IS10E-40□03-A □04-A □06-A	—
	Cross spacer Note 4)		Y14-M5-A	Y24-□01-A □02-A	Y34-□01-A □02-A		Y44-□02-A □03-A	Y54-□03-A □04-A

Note 1) □ in round pressure gauge part numbers indicates a pipe thread type. No indication is necessary for R; however, indicate N for NPT.
Please contact SMC regarding the pipe thread type NPT and the supply of pressure gauge with psi unit display specifications.
Note 2) Standard pressure gauge
Note 3) For F.R.L. units, port sizes without ( ) are standard specifications.
Note 4) Separate interfaces are required for modular unit.

Check Valve: (K) 1/8, 1/4, 3/8

A check valve with intermediate air release port can be easily installed to prevent a backflow of lubricant when redirecting the air flow and releasing the air on the outlet side of the regulator.

AKM 30 00 – □ 01 – A

❶ ❷ ❸

Symbol

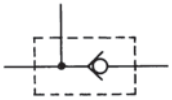

	Symbol	Description	❶ Body size 20	30	40
❷ Pipe thread type	—	Rc	●	●	●
	N	NPT	●	●	●
	F	G	●	●	●
+					
❸ By-pass port size	01	1/8	●	●	—
	02	1/4	●	●	●
	03	3/8	—	—	●

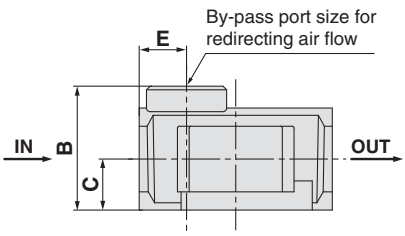

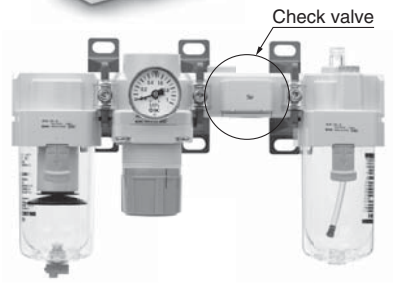

Specifications

Model	Effective area [mm²]
AKM2000-A	28
AKM3000-A	55
AKM4000-A	111

Be sure to use above check valves when redirecting the air flow on the inlet side of the lubricator. Threads for IN and OUT ports are not machined.

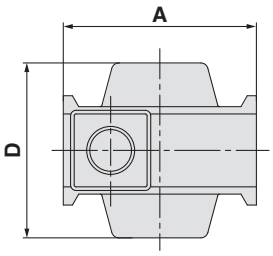

Model	By-pass port size	A	B	C	D	E	Applicable model
AKM2000-A	1/8, 1/4	40	28	11	40	11	AC20-A, AC20A-A
AKM3000-A	1/8, 1/4	53	34	14	48	13	AC25-A AC30-A, AC30A-A
AKM4000-A	1/4, 3/8	70	42	18	54	15	AC40-A, AC40A-A Note)

Note) Cannot be mounted on the AC40□-06-A.
∗ Refer to the attachment table above for standard by-pass port sizes applicable to the AC.

Pressure Switch: (S)

A compact integrated pressure switch can be easily installed and facilitates the pressure detection of the line.

IS10M-30-□-A

❶ ❷

- Semi-standard: Select one each for **a** to **c**.
- Semi-standard symbol: When more than one specification is required, indicate in alphanumeric order.

Example) IS10M-30-6LP

Symbol

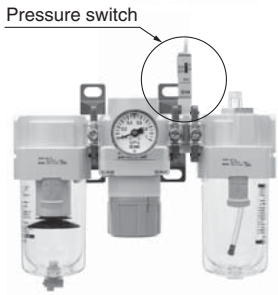

		Symbol	Description	❶ Body size 20	30	40	50
❷ Semi-standard	a Set pressure range	—	0.1 to 0.4 MPa	●	●	●	●
		6 Note 1)	0.1 to 0.6 MPa	●	●	●	●
		+					
	b Lead wire length	—	0.5 m	●	●	●	●
		L	3 m	●	●	●	●
		Z	5 m	●	●	●	●
		+					
	c Pressure unit of the scale plate	—	MPa	●	●	●	●
		P Note 2)	MPa/psi dual scale	●	●	●	●

Note 1) Set pressure range of 6P (L, Z) is 0.2 to 0.6 MPa (30 to 90 psi).
Note 2) This product is for overseas use only according to the new Measurement Law.
(The SI unit type is provided for use in Japan.)

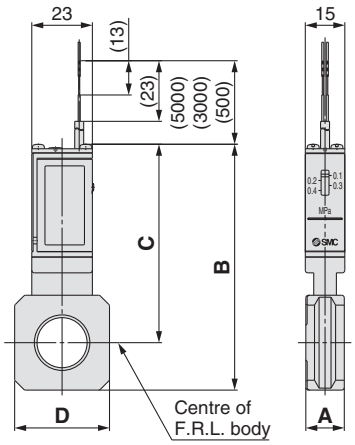

Specifications

Fluid	Air
Ambient and fluid temperature	–5 to 60°C (with no freezing)
Proof pressure	1.0 MPa
Maximum operating pressure	0.7 MPa
Set pressure range (when OFF)	0.1 to 0.4 MPa
Hysteresis	0.08 MPa or less

Switch Characteristics

Contact point configuration	1a
Maximum contact point capacity	2 VA (AC), 2 W (DC)
Operating voltage: AC, DC	100 V or less
Maximum operating current	12 V to 24 VAC, DC: 50 mA 48 VAC, DC: 40 mA 100 VAC, DC: 20 mA

Note) For detailed specifications on the IS10 series, refer to the section of our website IS10 series, http://www.smc.eu

Model	A	B	C	D	Applicable model
IS10M-20-A	10.6	74.2	64.4	28	**AC20□-A**
IS10M-30-A	12.6	84.5	70.5	30	**AC25□-A, AC30□-A**
IS10M-40-A	14.6	93.3	75.3	36	**AC40□-A**
IS10M-50-A	16.6	97.3	77.3	44	**AC40□-06-A**

∗ Separate spacers are required for modular unit.

T-Spacer: (T) M5 x 0.8, 1/8, 1/4, 3/8

Using a T-spacer facilitates the branching of air flow.

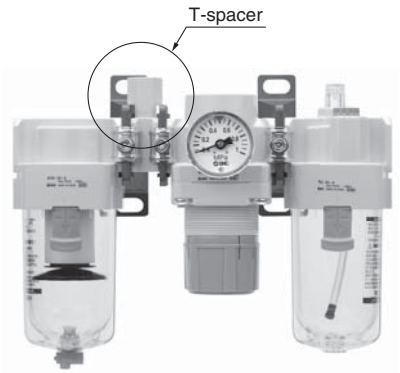

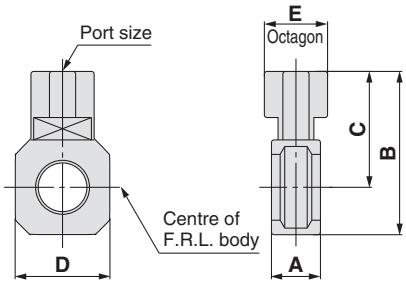

Model Note)	Port size	A	B	C	D	E	Applicable model
Y110-M5-A	M5 x 0.8	11.2	19	12	14	8	**AC10-A, AC10B-A**
Y210-□01-A	1/8	14.6	41.8	32	28	19	**AC20-A, AC20B-A**
Y210-□02-A	1/4						**AC20C-A**
Y310-□01-A	1/8	14.6	52.7	38.7	30	19	**AC25-A, AC25B-A AC25C-A, AC30-A AC30B-A, AC30C-A**
Y310-□02-A	1/4						
Y410-□02-A	1/4	18.6	62	44	36	24	**AC40-A, AC40B-A**
Y410-□03-A	3/8						**AC40C-A**
Y510-□02-A	1/4	18.6	66	46	44	24	**AC40-06-A, AC40B-06-A**
Y510-□03-A	3/8						**AC40C-06-A**

Note) □ in model numbers indicates a pipe thread type. No indication is necessary for Rc; however, indicate N for NPT, and F for G.
∗ Separate interfaces are required for modular unit.
∗ Refer to the attachment table on page 28 for standard port sizes when using with the AC.

Caution on Mounting

If a T-spacer is used on the inlet side of the lubricator, lubricant may be mixed. Use the AKM series check valve to avoid such possibility.

Pressure Relief 3 Port Valve: (V)

With the use of a pressure relief 3 port valve, pressure left in the line can be easily exhausted.

VHS 30 – [ ] 03 A – [ ]
❶ ❷ ❸ ❹

- Semi-standard: Select one each for **a** to **b**.
- Semi-standard symbol: When more than one specification is required, indicate in alphanumeric order.

Example) VHS30-03A-RZ

		Symbol	Description	❶ Body size 20	30	40
❷	Pipe thread type	—	Rc	●	●	●
		N Note)	NPT	●	●	●
		F Note)	G	●	●	●
		+				
❸	Port size	01	1/8	●	—	—
		02	1/4	●	●	●
		03	3/8	—	●	●
		04	1/2	—	—	●
		06	3/4	—	—	●
		+				
❹ Semi-standard	a Flow direction	—	Flow direction: Left to right	●	●	●
		R	Flow direction: Right to left	●	●	●
		+				
	b Pressure unit	—	Name plate in imperial units: MPa	●	●	●
		Z Note)	Name plate in imperial units: psi	●	●	●

Note) For pipe thread type: NPT only.

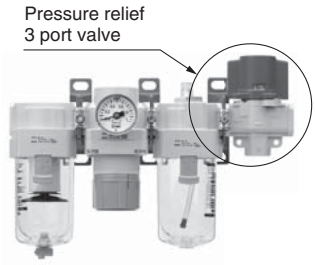

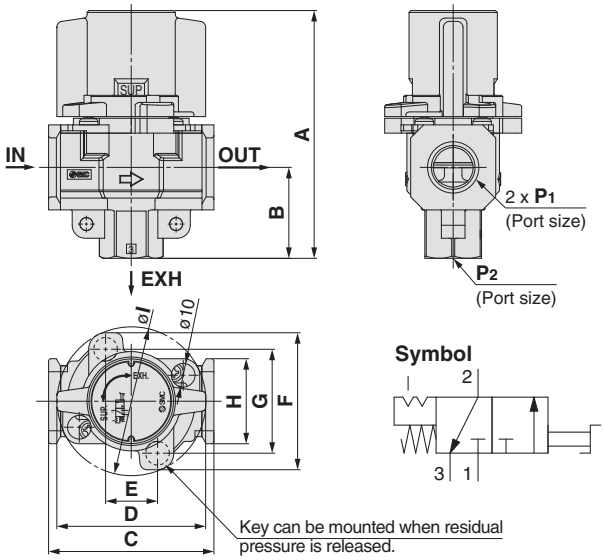

Specifications

Model	Port size IN, OUT	Port size EXH	Specifications IN → OUT C(dm³/s·bar)	IN → OUT b	IN → OUT Cv	OUT → EXH C(dm³/s·bar)	OUT → EXH b	OUT → EXH Cv
VHS20	1/8	1/8	2.4	0.43	0.65	2.5	0.39	0.69
	1/4		3.3	0.40	0.88	3.1	0.51	0.84
VHS30	1/4	1/4	6.4	0.45	1.7	6.2	0.38	1.7
	3/8		8.3	0.41	2.3	7.0	0.41	1.9
VHS40	1/4	3/8	7.3	0.49	2.0	8.5	0.35	2.3
	3/8		10.9	0.45	3.0	11.6	0.40	3.1
	1/2		14.2	0.39	3.8	13.3	0.43	3.6
VHS40-06	3/4	1/2	18.3	0.31	5.0	17.7	0.37	4.8

Note) Use an air filter on the IN side for operating protection.

Model	Standard specifications P1	P2	A	B	C	D	E	F	G	H	I
VHS20	1/8, 1/4	1/8	66.4	22.3	40	37.5	14	46.6	33.6	28	37.5
VHS30	1/4, 3/8	1/4	80.3	29.4	53	49	19	52	38	30	49
VHS40	1/4, 3/8, 1/2	3/8	104.9	38.5	70	63	22	58	44	36	63
VHS40-06	3/4	1/2	110.4	42	75	63	22	58	44	44	63

Cross Spacer: 1/8, 1/4, 3/8, 1/2

Pipings are possible in all 4 directions.
IN/OUT ports are not machined for threads.
Please contact SMC if threaded (machined) ports are required.

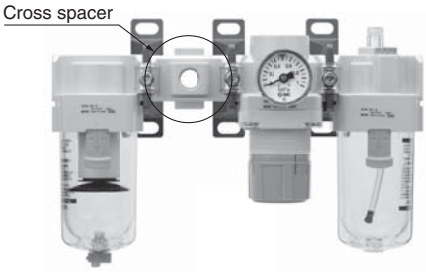

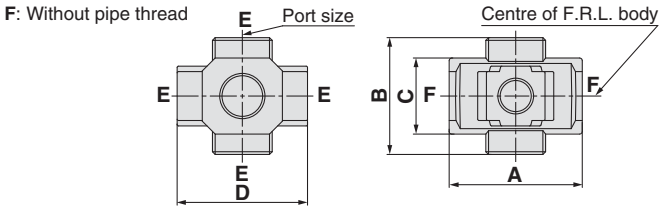

Model Note)	E (Port size)	A	B	C	D	Applicable model
Y14-M5-A	M5 x 0.8	23	16	14	25	AC10□-A
Y24-□01-A	1/8	40	40	22	40	AC20□-A
Y24-□02-A	1/4					
Y34-□01-A	1/8	49	43	28	48	AC25□-A, AC30□-A
Y34-□02-A	1/4					
Y44-□02-A	1/4	60	48	36	54	AC40□-A
Y44-□03-A	3/8					
Y54-□03-A	3/8	72	62	40	62	AC40□-06-A
Y54-□04-A	1/2					

Note) □ in model numbers indicates a pipe thread type. No indication is necessary for Rc; however, indicate N for NPT, and F for G.
∗ If threaded IN/OUT ports are required, they are available as a special order. Please contact SMC.
∗ Two hexagon socket head plugs are included in the package.

Caution on Mounting

1. When mounting a cross spacer directly on the inlet side of the lubricator, be sure to use the AKM series check valve between the lubricator and cross spacer.
2. Factory mounting of a cross spacer on the AC model is available as a special order.

Piping Adapter: M5 x 0.8, 1/8, 1/4, 3/8, 1/2, 3/4

A piping adapter allows installation/removal of the component without removing the piping and thus makes maintenance easier.

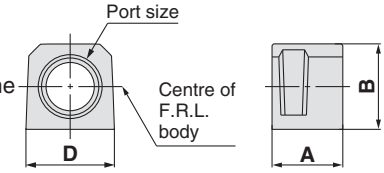

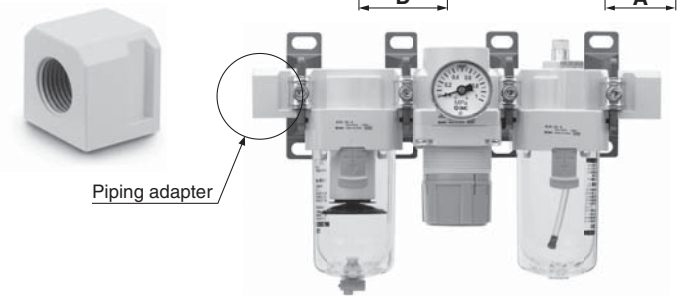

Model Note)	Port size	A	B	D	Applicable model
E100-M5-A	M5 x 0.8	10	14	14	**AC10□-A**
E200-□01-A	1/8	29.8	23.5	28	**AC20□-A**
E200-□02-A	1/4				
E200-□03-A	3/8				
E300-□02-A	1/4	31.8	30	30	**AC25□-A, AC30□-A**
E300-□03-A	3/8				
E300-□04-A	1/2				
E400-□02-A	1/4	31.8	36	36	**AC40□-A**
E400-□03-A	3/8				
E400-□04-A	1/2				
E400-□06-A	3/4				
E500-□06-A	3/4	31.8	40	44	**AC40□-06-A**

Note) □ in model numbers indicates a pipe thread type. No indication is necessary for Rc; however, indicate N for NPT, and F for G.
∗ Separate interfaces are required for modular unit.
∗ Factory mounting of a piping adapter on the AC models is available as a special order.

Pressure Switch with Piping Adapter

IS10E-30□03-□-A
❶ ❷ ❸ ❹

• Semi-standard: Select one each for **a** to **d**.
• Semi-standard symbol: When more than one specification is required, indicate in alphanumeric order.
Example) IS10E-30N03-6PRZ

		Symbol	Description	❶ Body size 20	30	40
❷	Pipe thread type	—	Rc	●	●	●
		N Note)	NPT	●	●	●
		F Note)	G	●	●	●
		+				
❸	Port size	**01**	1/8	●	—	—
		02	1/4	●	●	●
		03	3/8	●	●	●
		04	1/2	—	●	●
		06	3/4	—	—	●
		+				
❹ Semi-standard	a Set pressure range	—	0.1 to 0.4 MPa	●	●	●
		6 Note 1)	0.1 to 0.6 MPa	●	●	●
		+				
	b Lead wire length	—	0.5 m	●	●	●
		L	3 m	●	●	●
		Z	5 m	●	●	●
		+				
	c Pressure unit of the scale plate	—	MPa	●	●	●
		P Note 2)	MPa/psi dual scale	●	●	●
		+				
	d Mounting position	—	Right	●	●	●
		R	Left	●	●	●

Note 1) Set pressure range of 6P (L, R, Z) is 0.2 to 0.6 MPa (30 to 90 psi).
Note 2) For pipe thread type: NPT only.

Symbol

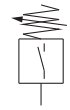

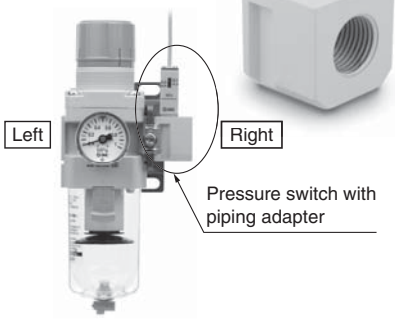

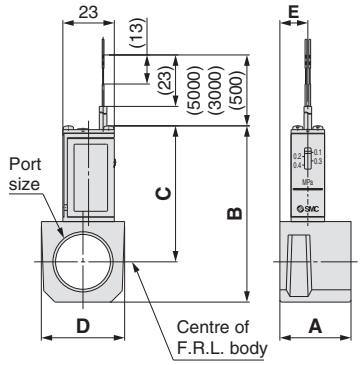

Specifications

Fluid	Air
Ambient and fluid temperature	–5 to 60°C (with no freezing)
Proof pressure	1.0 MPa
Maximum operating pressure	0.7 MPa
Set pressure range (when OFF)	0.1 to 0.4 MPa
Hysteresis	0.08 MPa or less

Switch Characteristics

Contact point configuration	1a
Maximum contact point capacity	2 VA (AC), 2 W (DC)
Operating voltage: AC, DC	100 V or less
Maximum operating current	12 V to 24 V AC, DC: 50 mA 48 V AC, DC: 40 mA 100 V AC, DC: 20 mA

Model Note 1)	Port size	A	B	C	D	E	Applicable model
IS10E-20□01-A	1/8	29.8	66.3	55.3	28	16	**AC20□-A**
IS10E-20□02-A	1/4						
IS10E-20□03-A	3/8						
IS10E-30□02-A	1/4	31.8	72.8	58.8	30	13	**AC25□-A, AC30□-A**
IS10E-30□03-A	3/8						
IS10E-30□04-A	1/2						
IS10E-40□02-A	1/4	31.8	78.8	60.8	37	12.5	Note 2) **AC40□-A**
IS10E-40□03-A	3/8						
IS10E-40□04-A	1/2						
IS10E-40□06-A	3/4						

Note 1) □ in the model numbers indicates a pipe thread type. No indication is necessary for Rc; however, indicate N for NPT, and F for G.
Note 2) Cannot be mounted on the AC40□-06-A.
∗ Separate interfaces are required for modular unit.
∗ The pressure switch on the AC40□-06-A can be mounted by screwing IS10-01S into the piping adapter E500-□06-A-X501 (with top-face thread Rc1/8). Products with a premounted switch are available as a special order. Please contact SMC regarding their availability.

Accessories (Spacers/Brackets)

Spacer

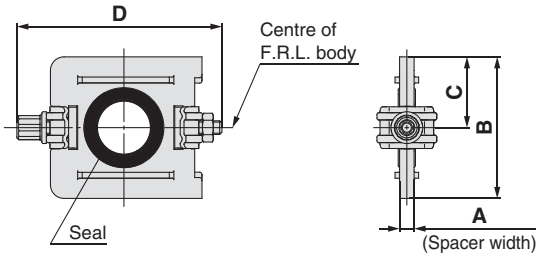

Model	A	B	C	D	Applicable model
Y100-A	6	17.9	9	35.4	**AC10□-A**
Y200-A	3.2	31.2	15.6	44.9	**AC20□-A**
Y300-A	4.2	43.4	21.7	57.9	**AC25□-A, AC30□-A**
Y400-A	5.2	53	26.5	68.5	**AC40□-A**
Y500-A	5.2	57	28.5	75.6	**AC40□-06-A**

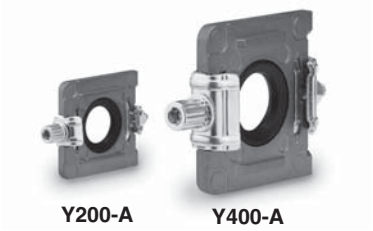

Replacement Parts

Description	Material	Part no.				
		Y100-A	**Y200-A**	**Y300-A**	**Y400-A**	**Y500-A**
Seal	HNBR (NBR) Note 1)	Y120P-050AS Note 2)	Y220P-050S	Y320P-050S	Y420P-050S	Y520P-050S

Note 1) ( ): Size 10
Note 2) Assembly of 2 O-rings

Spacer with Bracket

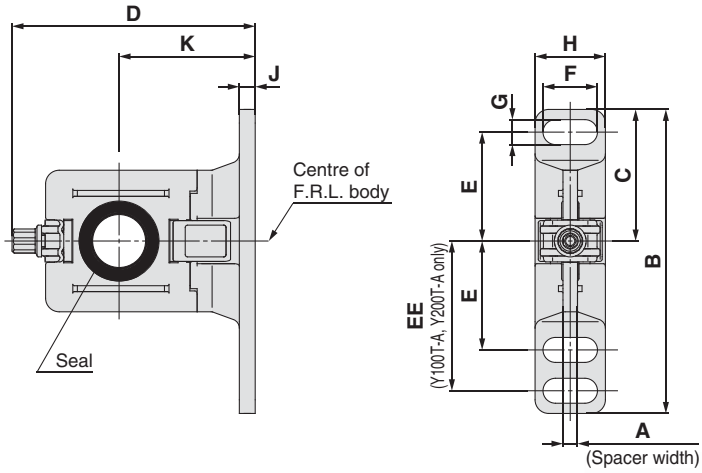

Model	A	B	C	D	E	EE	F	G	H	J	K	Applicable model
Y100T-A	6	56	24.5	43.6	20	27	6.8	4.5	13	3	25	**AC10□-A**
Y200T-A	3.2	67	29	53.4	24	33	12	5.5	15.5	3.5	30	**AC20□-A**
Y300T-A	4.2	82	41	71.5	35	—	14	7	19	4	41	**AC25□-A, AC30□-A**
Y400T-A	5.2	96	48	86.1	40	—	18	9	26	5	50	**AC40□-A**
Y500T-A	5.2	96	48	89.6	40	—	18	9	26	5	50	**AC40□-06-A**

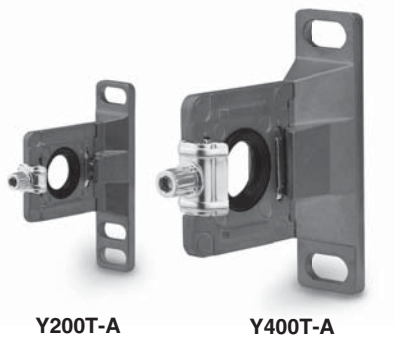

Replacement Parts

Description	Material	Part no.				
		Y100T-A	**Y200T-A**	**Y300T-A**	**Y400T-A**	**Y500T-A**
Seal	HNBR (NBR) Note 1)	Y120P-050AS Note 2)	Y220P-050S	Y320P-050S	Y420P-050S	Y520P-050S

Note 1) ( ): Size 10
Note 2) Assembly of 2 O-rings

Mounting Position for Spacer with Bracket

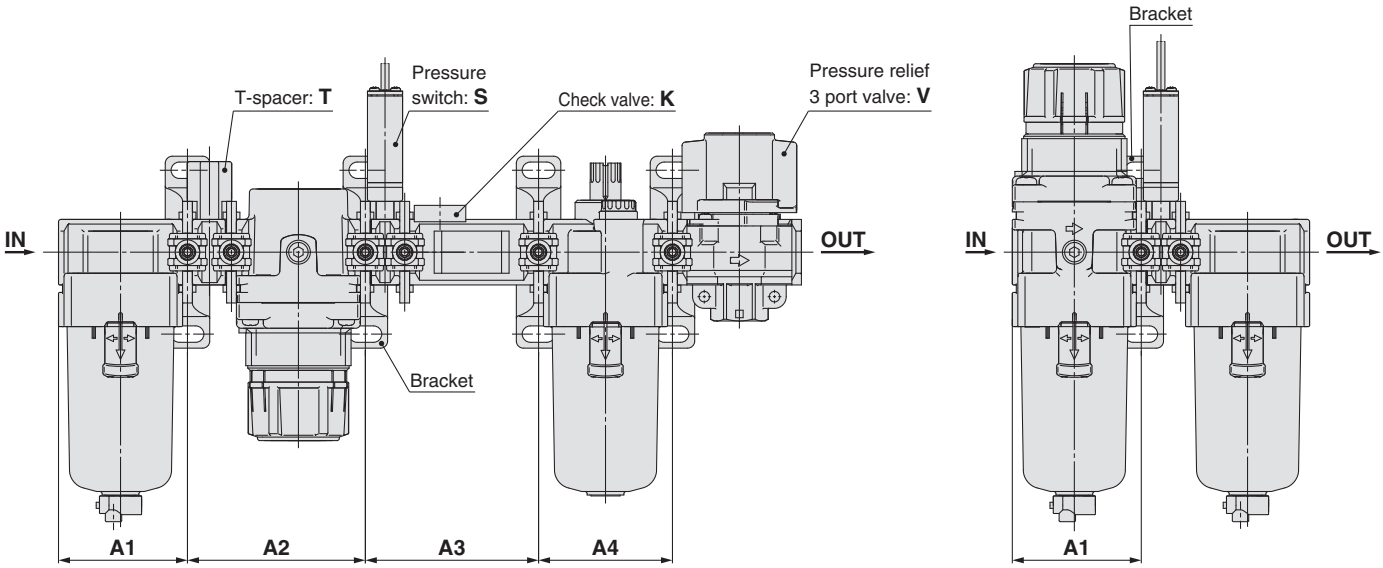

Attachment / Model	K			S		T		V			KS			KT			KV				KST		
	A1	A2	A3	A1	A2	A1	A2	A1	A2	A3	A1	A2	A3	A1	A2	A3	A1	A2	A3	A4	A1	A2	A3
AC10-A	—	—	—	—	—	28	48.2	—	—	—	—	—	—	—	—	—	—	—	—	—	—	—	—
AC20-A	41.6	43.2	43.2	41.6	43.2	41.6	61	41.6	43.2	43.2	41.6	43.2	57	41.6	61	43.2	41.6	43.2	43.2	43.2	41.6	61	57
AC25-A	55.1	57.2	57.2	55.1	57.2	55.1	76	55.1	57.2	57.2	55.1	57.2	74	55.1	76	57.2	55.1	57.2	57.2	57.2	55.1	76	74
AC30-A	55.1	57.2	57.2	55.1	57.2	55.1	76	55.1	57.2	57.2	55.1	57.2	74	55.1	76	57.2	55.1	57.2	57.2	57.2	55.1	76	74
AC40-A	72.6	75.2	75.2	72.6	75.2	72.6	99	72.6	75.2	75.2	72.6	75.2	95	72.6	99	75.2	72.6	75.2	75.2	75.2	72.6	99	95
AC40-06-A	—	—	—	77.6	80.2	77.6	104	77.6	80.2	80.2	—	—	—	—	—	—	—	—	—	—	—	—	—

Attachment / Model	KSV				KTV				KSTV				ST		SV			STV			TV		
	A1	A2	A3	A4	A1	A2	A3	A4	A1	A2	A3	A4	A1	A2	A1	A2	A3	A1	A2	A3	A1	A2	A3
AC10-A	—	—	—	—	—	—	—	—	—	—	—	—	—	—	—	—	—	—	—	—	—	—	—
AC20-A	41.6	43.2	57	43.2	41.6	61	43.2	43.2	41.6	61	57	43.2	41.6	61	41.6	43.2	57	41.6	61	57	41.6	61	43.2
AC25-A	55.1	57.2	74	57.2	55.1	76	57.2	57.2	55.1	76	74	57.2	55.1	76	55.1	57.2	74	55.1	76	74	55.1	76	57.2
AC30-A	55.1	57.2	74	57.2	55.1	76	57.2	57.2	55.1	76	74	57.2	55.1	76	55.1	57.2	74	55.1	76	74	55.1	76	57.2
AC40-A	72.6	75.2	95	75.2	72.6	99	75.2	75.2	72.6	99	95	75.2	72.6	99	72.6	75.2	95	72.6	99	95	72.6	99	75.2
AC40-06-A	—	—	—	—	—	—	—	—	—	—	—	—	77.6	104	77.6	80.2	102	77.6	104	102	77.6	104	80.2

Attachment / Model	K		S	V		KS		KV			KSV			SV	
	A1	A2	A1	A1	A2	A1	A2	A1	A2	A3	A1	A2	A3	A1	A2
AC10A-A	—	—	—	—	—	—	—	—	—	—	—	—	—	—	—
AC20A-A	41.6	43.2	41.6	41.6	43.2	41.6	57	41.6	43.2	43.2	41.6	57	43.2	41.6	57
AC30A-A	55.1	57.2	55.1	55.1	57.2	55.1	74	55.1	57.2	57.2	55.1	74	57.2	55.1	74
AC40A-A	72.6	75.2	72.6	72.6	75.2	72.6	95	72.6	75.2	75.2	72.6	95	75.2	72.6	95
AC40A-06-A	—	—	77.6	77.6	80.2	—	—	—	—	—	—	—	—	77.6	102

Attachment / Model	S	T	V		V1		SV		SV1		TV		TV1	
	A1	A1	A1	A2	A1	A2	A1	A2	A1	A2	A1	A2	A1	A2
AC10B-A	—	28	—	—	—	—	—	—	—	—	—	—	—	—
AC20B-A	41.6	41.6	41.6	43.2	41.6	43.2	41.6	57	41.6	43.2	41.6	61	41.6	43.2
AC25B-A	55.1	55.1	55.1	57.2	55.1	57.2	55.1	74	55.1	57.2	55.1	76	55.1	57.2
AC30B-A	55.1	55.1	55.1	57.2	55.1	57.2	55.1	74	55.1	57.2	55.1	76	55.1	57.2
AC40B-A	72.6	72.6	72.6	75.2	72.6	75.2	72.6	95	72.6	75.2	72.6	99	72.6	75.2
AC40B-06-A	77.6	77.6	77.6	80.2	77.6	80.2	77.6	102	77.6	80.2	77.6	104	77.6	80.2

Attachment / Model	S		T		V			V1			SV			SV1			TV			TV1		
	A1	A2	A1	A2	A1	A2	A3	A1	A2	A3	A1	A2	A3	A1	A2	A3	A1	A2	A3	A1	A2	A3
AC20C-A	41.6	43.2	41.6	43.2	41.6	43.2	43.2	41.6	43.2	43.2	41.6	43.2	57	41.6	43.2	43.2	41.6	43.2	61	41.6	43.2	43.2
AC25C-A	55.1	57.2	55.1	57.2	55.1	57.2	57.2	55.1	57.2	57.2	55.1	57.2	74	55.1	57.2	57.2	55.1	57.2	76	55.1	57.2	57.2
AC30C-A	55.1	57.2	55.1	57.2	55.1	57.2	57.2	55.1	57.2	57.2	55.1	57.2	74	55.1	57.2	57.2	55.1	57.2	76	55.1	57.2	57.2
AC40C-A	72.6	75.2	72.6	75.2	72.6	75.2	75.2	72.6	75.2	75.2	72.6	75.2	95	72.6	75.2	75.2	72.6	75.2	99	72.6	75.2	75.2
AC40C-06-A	77.6	80.2	77.6	80.2	77.6	80.2	80.2	77.6	80.2	80.2	77.6	80.2	102	77.6	80.2	80.2	77.6	80.2	104	77.6	80.2	80.2

Attachment / Model	S	V		V1		SV		SV1	
	A1	A1	A2	A1	A2	A1	A2	A1	A2
AC20D-A	41.6	41.6	43.2	41.6	43.2	41.6	57	41.6	43.2
AC30D-A	55.1	55.1	57.2	55.1	57.2	55.1	74	55.1	57.2
AC40D-A	72.6	72.6	75.2	72.6	75.2	72.6	95	72.6	75.2
AC40D-06-A	77.6	77.6	80.2	77.6	80.2	77.6	102	77.6	80.2

A1: Dimension from the end of the IN side to the centre of the mounting hole for the first bracket.
A2: Mounting hole pitch between the first and the second brackets.
A3: Mounting hole pitch between the second and the third brackets.
A4: Mounting hole pitch between the third and the fourth brackets.

Modular Type
Air Filters
Series AF/AFM/AFD

	Model	Port size	Filtration µm	Options
Air Filter Series AF **P.35 to 43**	**AF10-A**	M5 x 0.8	5	Bracket (Except AF10-A) Float type auto drain
	AF20-A	1/8, 1/4		
	AF30-A	1/4, 3/8		
	AF40-A	1/4, 3/8, 1/2		
	AF40-06-A	3/4		
	AF50-A	3/4, 1		
	AF60-A	1		
Mist Separator Series AFM **P.45 to 52**	**AFM20-A**	1/8, 1/4	0.3	Bracket Float type auto drain
	AFM30-A	1/4, 3/8		
	AFM40-A	1/4, 3/8, 1/2		
	AFM40-06-A	3/4		
Micro Mist Separator Series AFD **P.45 to 52**	**AFD20-A**	1/8, 1/4	0.01	Bracket Float type auto drain
	AFD30-A	1/4, 3/8		
	AFD40-A	1/4, 3/8, 1/2		
	AFD40-06-A	3/4		

Air Filter

AF10-A to AF60-A

Symbol

Air Filter

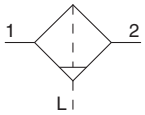

Air Filter with Auto Drain

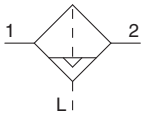

AF10-A

AF20-A

AF40-A

How to Order

AF 30 – ❶ ❷ 03 ❸ BD ❹ – ❺ – A – ❻

❻ Made to Order ●

(Refer to pages 42 and 43 for details.)

- Option/Semi-standard: Select one each for **a** to **f**.
- Option/Semi-standard symbol: When more than one specification is required, indicate in alphanumeric order.

Example) AF30-03BD-R-A

		Symbol	Description	❶ Body size 10	20	30	40	50	60
❷	Pipe thread type	—	Metric thread (M5)	●	—	—	—	—	—
			Rc	—	●	●	●	●	●
		N Note 1)	NPT	—	●	●	●	●	●
		F Note 2)	G	—	●	●	●	●	●
		+							
❸	Port size	M5	M5 x 0.8	●	—	—	—	—	—
		01	1/8	—	●	—	—	—	—
		02	1/4	—	●	●	●	—	—
		03	3/8	—	—	●	●	—	—
		04	1/2	—	—	—	●	—	—
		06	3/4	—	—	—	●	●	—
		10	1	—	—	—	—	●	●
		+							
❹ Option	a Mounting	—	Without mounting option	●	●	●	●	●	●
		B Note 3)	With bracket	—	●	●	●	●	●
		+							
	b Float type auto drain	—	Without auto drain	●	●	●	●	●	●
		C Note 4)	N.C. (Normally closed) Drain port is closed when pressure is not applied.	●	●	●	●	●	●
		D Note 5)	N.O. (Normally open) Drain port is open when pressure is not applied.	—	—	●	●	●	●
		+							
❺ Semi-standard	c Bowl Note 6)	—	Polycarbonate bowl	●	●	●	●	●	●
		2	Metal bowl	●	●	●	●	●	●
		6	Nylon bowl	●	●	●	●	●	●
		8	Metal bowl with level gauge	—	—	●	●	●	●
		C	With bowl guard	—	●	— Note 7)	— Note 7)	— Note 7)	— Note 7)
		6C	With bowl guard (Nylon bowl)	—	●	— Note 8)	— Note 8)	— Note 8)	— Note 8)
		+							
	d Drain port Note 9)	—	With drain cock	●	●	●	●	●	●
		J Note 10)	Drain guide 1/8	—	●	—	—	—	—
			Drain guide 1/4	—	—	●	●	●	●
		W Note 11)	Drain cock with barb fitting	—	—	●	●	●	●
		+							
	e Flow direction	—	Flow direction: Left to right	●	●	●	●	●	●
		R	Flow direction: Right to left	●	●	●	●	●	●
		+							
	f Pressure unit	—	Name plate and caution plate for bowl in imperial units: MPa	●	●	●	●	●	●
		Z Note 12)	Name plate and caution plate for bowl in imperial units: psi, °F	○ Note 13)	○ Note 13)	○ Note 13)	○ Note 13)	○ Note 13)	○ Note 13)

Note 1) Drain guide is NPT1/8 (applicable to the AF20-A) and NPT1/4 (applicable to the AF30-A to AF60-A).
The auto drain port comes with ø3/8" One-touch fitting (applicable to the AF30-A to AF60-A).
Note 2) Drain guide is G1/8 (applicable to the AF20-A) and G1/4 (applicable to the AF30-A to AF60-A).
The auto drain port comes with ø10 One-touch fitting (applicable to the AF30-A to AF60-A).
Note 3) Option B is not assembled and supplied loose at the time of shipment. Assembly of a bracket and 2 mounting screws.
Note 4) When pressure is not applied, condensate which does not start the auto drain mechanism will be left in the bowl.
Releasing the residual condensate before ending operations for the day is recommended.
Note 5) If the compressor is small (0.75 kW, discharge flow is less than 100 L/min [ANR]), air leakage from the drain cock may occur during start of operations. N.C. type is recommended.
Note 6) Refer to Chemical data on page 38 for chemical resistance of the bowl.
Note 7) A bowl guard is provided as standard equipment (polycarbonate).
Note 8) A bowl guard is provided as standard equipment (nylon).
Note 9) The combination of float type auto drain: C and D is not available.
Note 10) Without a valve function
Note 11) The combination of metal bowl: 2 and 8 is not available.
Note 12) For pipe thread type: M5, NPT.
Note 13) ○: For pipe thread type: M5, NPT only

Standard Specifications

Model	AF10-A	AF20-A	AF30-A	AF40-A	AF40-06-A	AF50-A	AF60-A
Port size	M5 x 0.8	1/8, 1/4	1/4, 3/8	1/4, 3/8, 1/2	3/4	3/4, 1	1
Fluid	Air						
Ambient and fluid temperature	–5 to 60 °C (with no freezing)						
Proof pressure	1.5 MPa						
Maximum operating pressure	1.0 MPa						
Nominal filtration rating	5 µm						
Drain capacity [cm³]	2.5	8	25	45			
Bowl material	Polycarbonate						
Bowl guard	—	Semi-standard (Steel)	Standard (Polycarbonate)				
Weight [kg]	0.06	0.08	0.18	0.36	0.41	0.87	1.00

Options/Part No.

Optional specifications	Model						
	AF10-A	AF20-A	AF30-A	AF40-A	AF40-06-A	AF50-A	AF60-A
Bracket assembly Note)	—	AF22P-050AS	AF32P-050AS	AF42P-050AS	AF42P-070AS	AF52P-050AS	

Note) Assembly of a bracket and 2 mounting screws

Bowl Assembly/Part No.

Bowl material	Drain discharge mechanism	Drain port	Other	Model						
				AF10-A	AF20-A	AF30-A	AF40-A	AF40-06-A	AF50-A	AF60-A
Polycarbonate bowl	Manual discharge	With drain cock	—	C1SF-A	C2SF-A	—	—			
			With bowl guard	—	C2SF-C-A	C3SF-A	C4SF-A			
		Drain cock with barb fitting	With bowl guard	—	—	C3SF-W-A	C4SF-W-A			
		With drain guide (without valve function)	—	—	C2SF□-J-A	—	—			
			With bowl guard	—	C2SF□-CJ-A	C3SF□-J-A	C4SF□-J-A			
	Automatic discharge Note) (Auto drain)	Normally closed (N.C.)	—	AD17-A	AD27-A	—	—			
			With bowl guard	—	AD27-C-A	AD37□-A	AD47□-A			
		Normally open (N.O.)	With bowl guard	—	—	AD38□-A	AD48□-A			
Nylon bowl	Manual discharge	With drain cock	—	C1SF-6-A	C2SF-6-A	—	—			
			With bowl guard	—	C2SF-6C-A	C3SF-6-A	C4SF-6-A			
		Drain cock with barb fitting	With bowl guard	—	—	C3SF-6W-A	C4SF-6W-A			
		With drain guide (without valve function)	—	—	C2SF□-6J-A	—	—			
			With bowl guard	—	C2SF□-6CJ-A	C3SF□-6J-A	C4SF□-6J-A			
	Automatic discharge Note) (Auto drain)	Normally closed (N.C.)	—	AD17-6-A	AD27-6-A	—	—			
			With bowl guard	—	AD27-6C-A	AD37□-6-A	AD47□-6-A			
		Normally open (N.O.)	With bowl guard	—	—	AD38□-6-A	AD48□-6-A			
Metal bowl	Manual discharge	With drain cock	—	C1SF-2-A	C2SF-2-A	C3SF-2-A	C4SF-2-A			
			With level gauge	—	—	C3LF-8-A	C4LF-8-A			
		With drain guide (without valve function)	—	—	C2SF□-2J-A	C3SF□-2J-A	C4SF□-2J-A			
			With level gauge	—	—	C3LF□-8J-A	C4LF□-8J-A			
	Automatic discharge Note) (Auto drain)	Normally closed (N.C.)	—	AD17-2-A	AD27-2-A	AD37□-2-A	AD47□-2-A			
			With level gauge	—	—	AD37□-8-A	AD47□-8-A			
		Normally open (N.O.)	—	—	—	AD38□-2-A	AD48□-2-A			
			With level gauge	—	—	AD38□-8-A	AD48□-8-A			

Note) Minimum operating pressure: N.O. type–0.1 MPa (AD38-A, AD48-A); N.C. type–0.1 MPa (AD17-A, AD27-A) and 0.15 MPa (AD37-A, AD47-A).
Bowl assembly for the AF20-A to AF60-A models comes with a bowl seal.
□ in bowl assembly part numbers indicates a pipe thread type (applicable tubing for auto drain).
No indication is necessary for Rc thread; however, indicate N for NPT thread, and F for G thread. (For auto drain, —: ø10, N: ø3/8")
Please consult with SMC separately for psi and °F unit display specifications.

Flow-rate Characteristics (Representative values)

AF10-A M5

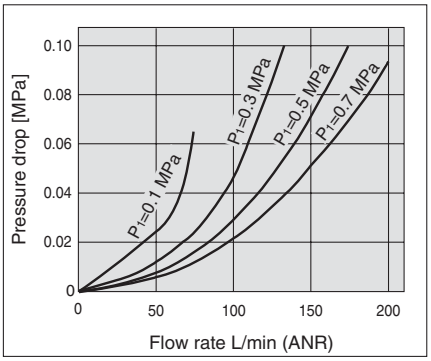

AF20-A Rc1/4

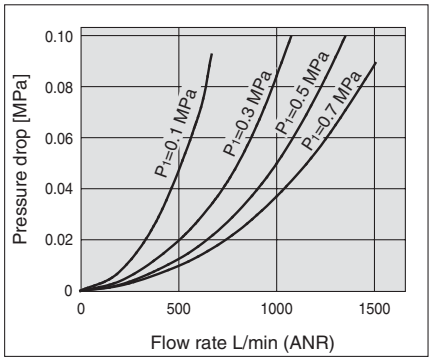

AF30-A Rc3/8

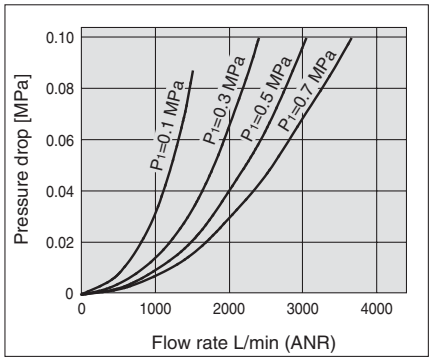

AF40-A Rc1/2

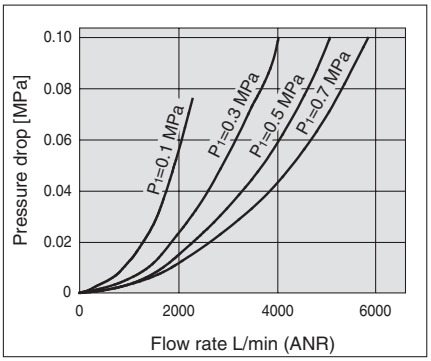

AF40-06-A Rc3/4

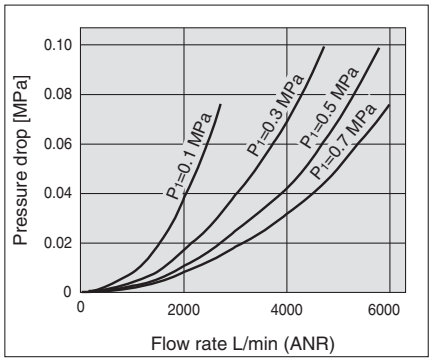

AF50-A Rc1

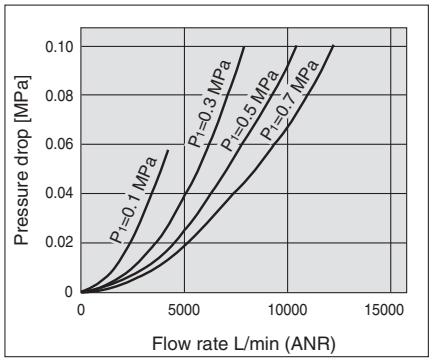

AF60-A Rc1

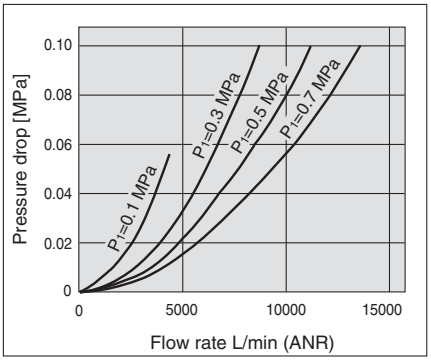

⚠ Specific Product Precautions

Be sure to read this before handling. Refer to the back cover for Safety Instructions, "Handling Precautions for SMC Products" and the Operation Manual for F.R.L. Precautions, http://www.smc.eu

Design/Selection

⚠ Warning

1. The standard bowl for the air filter, filter regulator, and lubricator, as well as the sight dome for the lubricator are made of polycarbonate. Do not use in an environment where they are exposed to or come in contact with organic solvents, chemicals, cutting oil, synthetic oil, alkali, and thread lock solutions.

Effects of atmosphere of organic solvents and chemicals, and where these elements are likely to adhere to the equipment.
Chemical data for substances causing degradation (Reference)

Type	Chemical name	Application examples	Material	
			Polycarbonate	Nylon
Acid	Hydrochloric acid Sulfuric acid, Phosphoric acid Chromic acid	Acid washing liquid for metals	△	×
Alkaline	Sodium hydroxide (Caustic soda) Potash Calcium hydroxide (Slack lime) Ammonia water Carbonate of soda	Degreasing of metals Industrial salts Water-soluble cutting oil	×	○
Inorganic salts	Sodium sulfide Sulfate of potash Sulfate of soda	—	×	△
Chlorine solvents	Carbon tetrachloride Chloroform Ethylene chloride Methylene chloride	Cleansing liquid for metals Printing ink Dilution	×	△
Aromatic series	Benzene Toluene Paint thinner	Coatings Dry cleaning	×	△
Ketone	Acetone Methyl ethyl ketone Cyclohexane	Photographic film Dry cleaning Textile industries	×	×
Alcohol	Ethyl alcohol IPA Methyl alcohol	Antifreeze Adhesives	△	×
Oil	Gasoline Kerosene	—	×	○
Ester	Phthalic acid dimethyl Phthalic acid diethyl Acetic acid	Synthetic oil Anti-rust additives	×	○
Ether	Methyl ether Ethyl ether	Brake oil additives	×	○
Amino	Methyl amino	Cutting oil Brake oil additives Rubber accelerator	×	×
Others	Thread-lock fluid Seawater Leak tester	—	×	△

○: Essentially safe △: Some effects may occur. ×: Effects will occur.

When the above factors are present, or there is some doubt, use a metal bowl for safety.

Maintenance

⚠ Warning

1. Replace the element every 2 years or when the pressure drop becomes 0.1 MPa, whichever comes first, to prevent damage to the element.

Mounting/Adjustment

⚠ Caution

1. When the bowl is installed on the air filter (AF30-A to AF60-A), install them so that the lock button lines up to the groove of the front (or the back) of the body to avoid drop or damage of the bowl.

Working Principle: Float Type Auto Drain

N.O. type: AD38-A, AD48-A

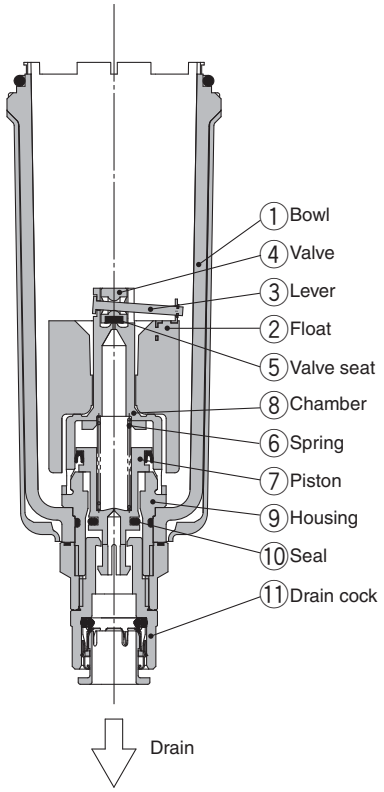

- **When pressure inside the bowl is released:**
  When pressure is released from the bowl ①, the piston ⑦ is lowered by the spring ⑥.
  The sealing action of the seal ⑩ is interrupted, and the outside air flows inside the bowl ① through the housing hole ⑨ and the drain cock ⑪.
  Therefore, if there is an accumulation of condensate in the bowl ①, it will drain out through the drain cock.
- **When pressure is applied inside the bowl:**
  When pressure is 0.1 MPa or more, the force of the piston ⑦ surpasses the force of the spring ⑥, and the piston goes up.
  This pushes seal ⑩ up so that it creates a seal, and the inside of the bowl ①, is shut off from the outside air.
  If there is no accumulation of condensate in the bowl ① at this time, the float ② will be pulled down by its own weight, causing the valve ④, which is connected to the lever ③, to seal the valve seat ⑤.
- **When there is an accumulation of condensate in the bowl:**
  The float ② rises due to its own buoyancy and the seal at the valve seat ⑤ is interrupted.
  This allows the pressure inside the bowl ① to enter the chamber ⑧. The result is that the combined pressure inside the chamber ⑧ and the force of the spring ⑥ lowers the piston ⑦.
  This causes the sealing action of the seal ⑩ to be interrupted, and the accumulated condensate in the bowl ① drains out through the drain cock ⑪.
  Turning the drain cock ⑪ manually counterclockwise lowers the piston ⑦, and causes the seal created by the seal ⑩ to be interrupted, thus allowing the condensate to drain out.

N.C. type: AD37-A, AD47-A

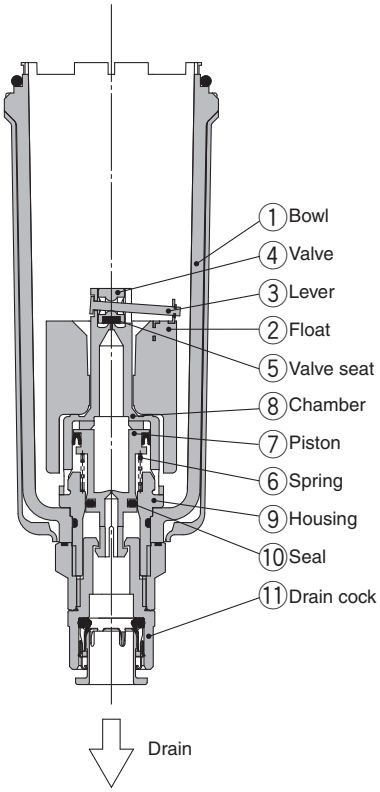

- **When pressure inside the bowl is released:**
  Even when pressure inside the bowl ① is released, spring ⑥ keeps the piston ⑦ in its upward position.
  This keeps the seal created by the seal ⑩ in place; thus, the inside of the bowl ① is shut off from the outside air.
  Therefore, even if there is an accumulation of condensate in the bowl ①, it will not drain out.
- **When pressure is applied inside the bowl:**
  Even when pressure is applied inside the bowl ①, the combined force of the spring ⑥ and the pressure inside the bowl ① keeps the piston ⑦ in its upward position.
  This maintains the seal created by the seal ⑩ in place; thus, the inside of the bowl ① is shut off from the outside air.
  If there is no accumulation of condensate in the bowl ① at this time, the float ② will be pulled down by its own weight, causing the valve ④, which is connected to the lever ③, to seal the valve seat ⑤.
- **When there is an accumulation of condensate in the bowl:**
  The float ② rises due to its own buoyancy and the seal at the valve seat ⑤ is interrupted.This allows the pressure inside the bowl ① to enter the chamber ⑧.
  The result is that the pressure inside the chamber ⑧ surpasses the force of the spring ⑥ and pushes the piston ⑦ downward.
  This causes the sealing action of the seal ⑩ to be interrupted and the accumulated condensate in the bowl ① drains out through the drain cock ⑪.
  Turning the drain cock ⑪ manually counterclockwise lowers the piston ⑦, and causes the seal created by the seal ⑩ to be interrupted, thus allowing the condensate to drain out.

Compact auto drain N.C. type: AD17-A, AD27-A

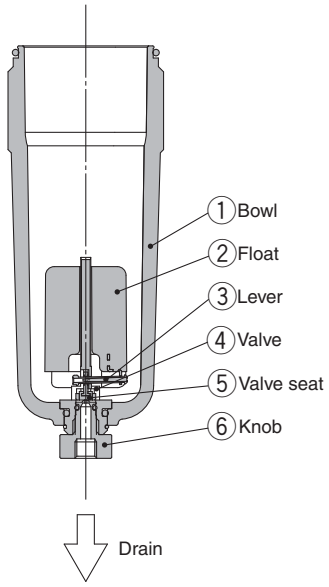

- **When pressure inside the bowl is released:**
  Even when pressure inside the bowl ① is released, the weight of the float ② causes the valve ④, which is connected to the lever ③, to seal the valve seat ⑤. As a result, the inside of the bowl ① is shut off from the outside air.
  Therefore, even if there is an accumulation of condensate in the bowl ①, it will not drain out.
- **When pressure is applied inside the bowl:**
  Even when pressure is applied inside the bowl ①, the weight of the float ② and the differential pressure that is applied to the valve ④ cause the valve ④ to seal the valve seat ⑤, and the outside air is shut off from the inside of the bowl ①.
- **When there is an accumulation of condensate in the bowl:**
  The float ② rises due to its own buoyancy and the seal at the valve seat ⑤ is interrupted.
  The condensate inside the bowl ① drains out through the knob ⑥.
  Turning the knob ⑥ manually counterclockwise lowers it and causes the sealing action of the valve seat ⑤ to be interrupted, which allows the condensate to drain out.

Construction

AF10-A/AF20-A

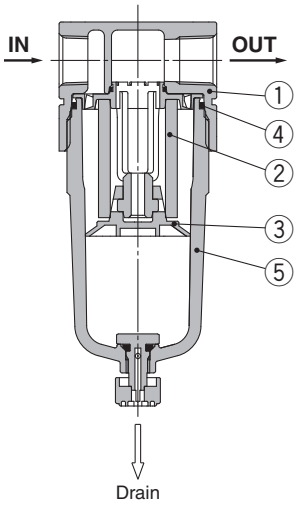

AF30-A to AF40-06-A

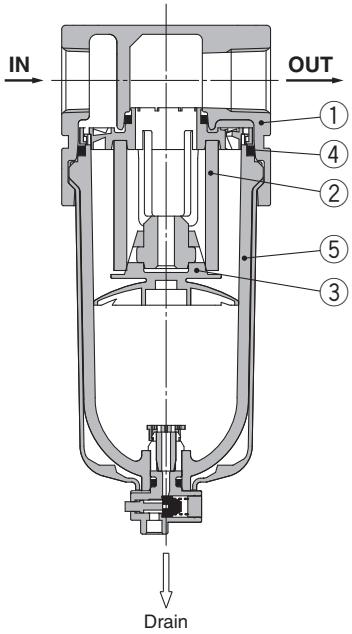

AF50-A/AF60-A

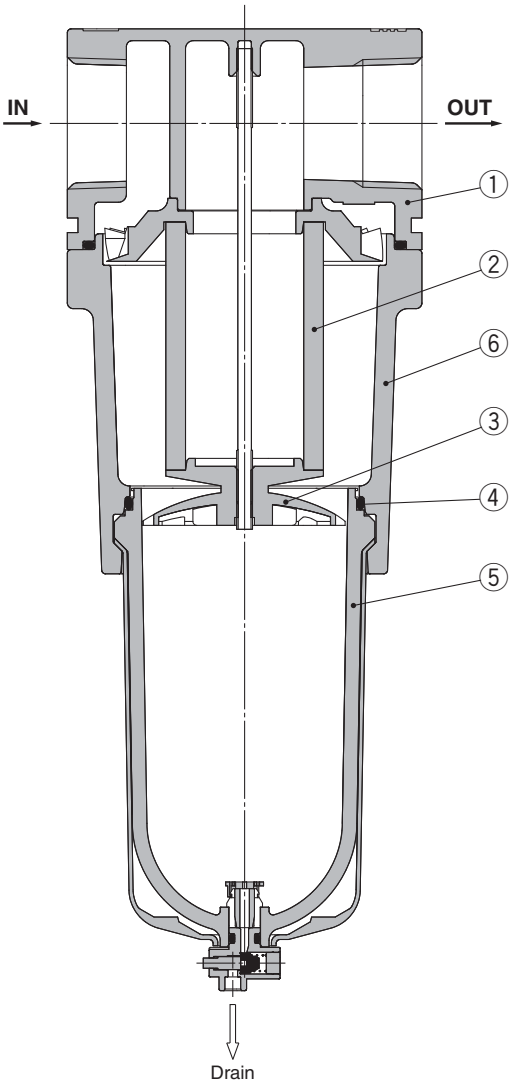

Component Parts

No.	Description	Material	Model	Colour
1	**Body**	Zinc die-cast	AF10-A	White
		Aluminum die-cast	AF20-A to AF60-A	
6	**Housing**	Aluminum die-cast	AF50-A/AF60-A	White

Replacement Parts

No.	Description	Material	Part no.						
			AF10-A	**AF20-A**	**AF30-A**	**AF40-A**	**AF40-06-A**	**AF50-A**	**AF60-A**
2	**Filter element**	Non-woven fabric	AF10P-060S	AF20P-060S	AF30P-060S	AF40P-060S		AF50P-060S	AF60P-060S
3	**Baffle**	PBT	AF10P-040S Note 2)	AF22P-040S	AF32P-040S	AF42P-040S		AF50P-040S	AF60P-040S
4	**Bowl seal**	NBR	C1SFP-260S	C2SFP-260S	C32FP-260S	C42FP-260S			
5	**Bowl assembly** Note 1)	Polycarbonate	C1SF-A	C2SF-A	C3SF-A	C4SF-A			

Note 1) Bowl seal is included for the AF20-A to AF60-A. Please contact SMC regarding the supply of bowl assembly with psi and °F unit display specifications.
Note 2) The baffle material for the AF10-A (AF10P-040S) only is polyacetal.

Dimensions

AF10-A/AF20-A

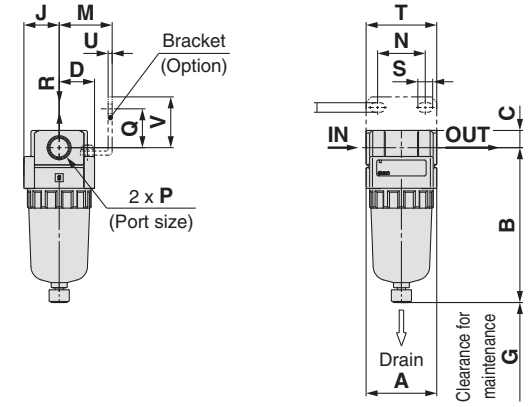

AF30-A to AF40-06-A

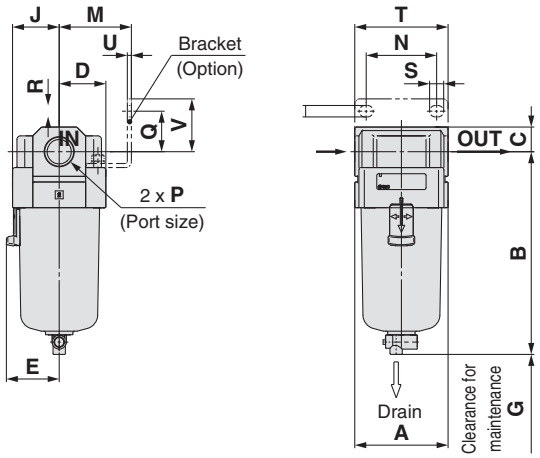

AF50-A/AF60-A

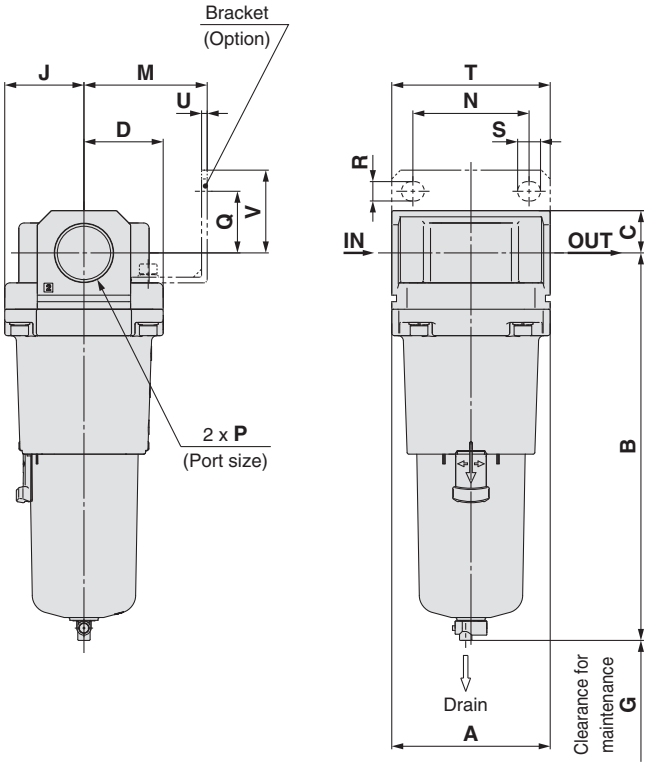

Applicable model	AF10-A/AF20-A		AF20-A		AF30-A to AF60-A
Optional/Semi-standard specifications	With auto drain (N.C.)	Metal bowl	With drain guide	Metal bowl with drain guide	With auto drain (N.O./N.C.)
Dimensions	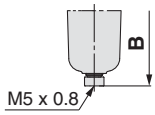	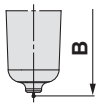	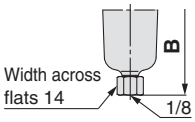	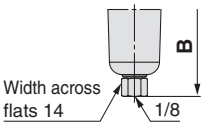	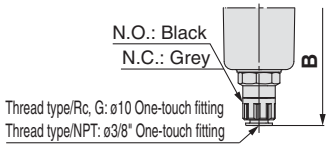

Applicable model	AF30-A to AF60-A					
Optional/Semi-standard specifications	Metal bowl	Metal bowl with drain guide	Metal bowl with level gauge	Metal bowl with level gauge, with drain guide	With drain guide	Drain cock with barb fitting
Dimensions	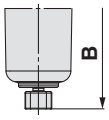	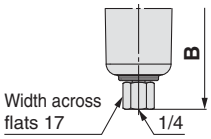	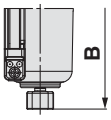	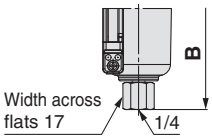	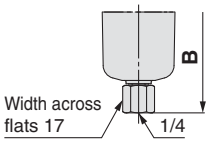	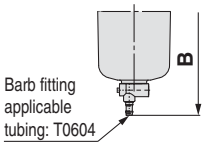

Model	Standard specifications								Optional specifications									Semi-standard specifications					
									Bracket mount								With auto drain	With barb fitting	With drain guide	Metal bowl	Metal bowl with drain guide	Metal bowl with level gauge	Metal bowl with level gauge, with drain guide
	P	A	B	C	D	E	G	J	M	N	Q	R	S	T	U	V	B	B	B	B	B	B	B
AF10-A	M5 x 0.8	25	59.9	7	12.5	—	25	12.5	—	—	—	—	—	—	—	—	77.9	—	—	59.3	—	—	—
AF20-A	1/8, 1/4	40	87.6	9.8	20	—	25	20	30	27	22	5.4	8.4	40	2.3	28	104.9	—	91.4	87.4	93.9	—	—
AF30-A	1/4, 3/8	53	115.1	14	26.7	30	35	26.7	41	40	23	6.5	8	53	2.3	30	156.8	123.6	121.9	117.6	122.1	137.6	142.1
AF40-A	1/4, 3/8, 1/2	70	147.1	18	35.5	38.4	40	35.5	50	54	26	8.5	10.5	70	2.3	35	186.9	155.6	153.9	149.6	154.1	169.6	174.1
AF40-06-A	3/4	75	149.1	20	35.5	38.4	40	35.5	50	54	25	8.5	10.5	70	2.3	34	188.9	157.6	155.9	151.6	156.1	171.6	176.1
AF50-A	3/4, 1	90	220.1	24	45	—	30	45	70	66	35	11	13	90	3.2	47	259.9	228.6	226.9	222.6	227.1	242.6	247.1
AF60-A	1	95	234.1	24	47.5	—	30	47.5	70	66	35	11	13	90	3.2	47	273.9	242.6	240.9	236.6	241.1	256.6	261.1

Air Filter/*AF20-A to AF40-06-A*

Made to Order

Please contact SMC for detailed dimensions, specifications and lead times.

Made to Order

❶ Long Bowl

Drain capacity is greater than that of standard models.

Applicable Model/Drain Capacity

Model	AF20-A	AF30-A	AF40-A	AF40-06-A
Port size	1/8, 1/4	1/4, 3/8	1/4, 3/8, 1/2	3/4
Drain capacity [cm³]	19	43	88	

Note) Please consult with SMC for dimensions.

AF 30 - ☐ 03 ☐ - ☐ - A - X64

❶ ❷ ❸ ❹ ❺

• **Long bowl**

• Semi-standard: Select one each for **a** to **d**.
• Option/Semi-standard symbol: When more than one specification is required, indicate in alphanumeric order.
Example) AF30-03B-2R-A-X64

		Symbol	Description	❶ Body size 20	30	40
❷	Pipe thread type	—	Rc	●	●	●
		N Note 1)	NPT	●	●	●
		F Note 2)	G	●	●	●
		+				
❸	Port size	01	1/8	●	—	—
		02	1/4	●	●	●
		03	3/8	—	●	●
		04	1/2	—	—	●
		06	3/4	—	—	●
		+				
❹	Option (Mounting)	—	Without mounting option	●	●	●
		B Note 3)	With bracket	●	●	●
		+				
❺ Semi-standard	a Bowl Note 4)	—	Polycarbonate bowl	●	●	●
		2	Metal bowl	●	●	●
		6	Nylon bowl	●	●	●
		C	With bowl guard	●	— Note 5)	— Note 5)
		6C	With bowl guard (Nylon bowl)	●	— Note 6)	— Note 6)
		+				
	b Drain port	—	With drain cock	●	●	●
		J Note 7)	Drain guide 1/8	●	—	—
			Drain guide 1/4	—	●	●
		W Note 8)	Drain cock with barb fitting (for ø6 x ø4 nylon tube)	—	●	●
		+				
	c Flow direction	—	Flow direction: Left to right	●	●	●
		R	Flow direction: Right to left	●	●	●
		+				
	d Pressure unit	—	Name plate and caution plate for bowl in imperial units: MPa	●	●	●
		Z Note 9)	Name plate and caution plate for bowl in imperial units: psi, °F	○ Note 10)	○ Note 10)	○ Note 10)

Note 1) Drain guide is NPT1/8 (applicable to the AF20-A) and NPT1/4 (applicable to the AF30-A to AF40-06-A).
Note 2) Drain guide is G1/8 (applicable to the AF20-A) and G1/4 (applicable to the AF30-A to AF40-06-A).
Note 3) A bracket is not assembled and supplied loose at the time of shipment. Including 2 mounting screws.
Note 4) Refer to Chemical data on page 38 for chemical resistance of the bowl.
Note 5) A bowl guard is provided as standard equipment (polycarbonate).
Note 6) A bowl guard is provided as standard equipment (nylon).
Note 7) Without a valve function
Note 8) The combination of metal bowl: 2 is not available.
Note 9) For pipe thread type: NPT.
Note 10) ○: For pipe thread type: NPT only

Made to Order

Please contact SMC for detailed dimensions, specifications and lead times.

Made to Order

❷ With Element Service Indicator

Clogging status of elements can be checked visually.

Applicable Model

Model	AF20-A	AF30-A	AF40-A	AF40-06-A
Port size	1/8, 1/4	1/4, 3/8	1/4, 3/8, 1/2	3/4

AF 30 - ☐ 03 ☐ - ☐ -A-X2141

❶ ❷ ❸ ❹ ❺

- Option/Semi-standard: Select one each for **a** to **f**.
- Option/Semi-standard symbol: When more than one specification is required, indicate in alphanumeric order.

Example) AF30-03BD-2R-A-X2141

With element service indicator

A special body type is required to mount the element service indicator. It cannot be mounted on a standard body.

			Symbol	Description	❶ Body size 20	30	40
❷	Pipe thread type		—	Rc	●	●	●
			N Note 1)	NPT	●	●	●
			F Note 2)	G	●	●	●
			+				
❸	Port size		01	1/8	●	—	—
			02	1/4	●	●	●
			03	3/8	—	●	●
			04	1/2	—	—	●
			06	3/4	—	—	●
			+				
❹	Option	a Mounting	—	Without mounting option	●	●	●
			B Note 3)	With bracket	●	●	●
			+				
		b Float type auto drain	—	Without auto drain	●	●	●
			C Note 4)	N.C. (Normally closed) Drain port is closed when pressure is not applied.	●	●	●
			D Note 5)	N.O. (Normally open) Drain port is open when pressure is not applied.	—	●	●
			+				
❺	Semi-standard	c Bowl Note 6)	—	Polycarbonate bowl	●	●	●
			2	Metal bowl	●	●	●
			6	Nylon bowl	●	●	●
			8	Metal bowl with level gauge	—	●	●
			C	With bowl guard	●	— Note 7)	— Note 7)
			6C	With bowl guard (Nylon bowl)	●	— Note 8)	— Note 8)
			+				
		d Drain port Note 12)	—	With drain cock	●	●	●
			J Note 9)	Drain guide 1/8	●	—	—
				Drain guide 1/4	—	●	●
			W Note 13)	Drain cock with barb fitting (for ø6 x ø4 nylon tube)	—	●	●
			+				
		e Flow direction	—	Flow direction: Left to right	●	●	●
			R	Flow direction: Right to left	●	●	●
			+				
		f Pressure unit	—	Name plate and caution plate for bowl in imperial units: MPa	●	●	●
			Z Note 10)	Name plate and caution plate for bowl in imperial units: psi, °F	○ Note 11)	○ Note 11)	○ Note 11)

Note 1) Drain guide is NPT1/8 (applicable to the AF20-A) and NPT1/4 (applicable to the AF30-A to AF40-06-A).
The auto drain port comes with ø3/8" One-touch fitting (applicable to the AF30-A to AF40-06-A).
Note 2) Drain guide is G1/8 (applicable to the AF20-A) and G1/4 (applicable to the AF30-A to AF40-06-A).
Note 3) A bracket is not assembled and supplied loose at the time of shipment. Including 2 mounting screws.
Note 4) When pressure is not applied, condensate which does not start the auto drain mechanism will be left in the bowl.
Releasing the residual condensate before ending operations for the day is recommended.
Note 5) If the compressor is small (0.75 kW, discharge flow is less than 100 L/min [ANR]), air leakage from the drain cock may occur during start of operations. N.C. type is recommended.
Note 6) Refer to Chemical data on page 38 for chemical resistance of the bowl.
Note 7) A bowl guard is provided as standard equipment (polycarbonate).
Note 8) A bowl guard is provided as standard equipment (nylon).
Note 9) Without a valve function
Note 10) For pipe thread type: NPT.
Note 11) ○: For pipe thread type: NPT only
Note 12) The combination of float type auto drain: C and D is not available.
Note 13) The combination of metal bowl: 2 and 8 is not available.

Mist Separator
AFM20-A to AFM40-A
Micro Mist Separator
AFD20-A to AFD40-A

Symbol

Mist Separator

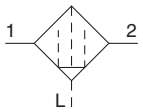

AFM20-A

AFM40-A

Micro Mist Separator

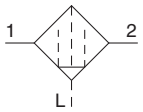

AFD20-A

AFD40-A

- **Series AFM Nominal filtration rating: 0.3 μm**
- **Series AFD Nominal filtration rating: 0.01 μm**

How to Order

AFM 30 – ☐ 03 BD – ☐ –A – ☐

AFD 30 – ☐ 03 BD – ☐ –A – ☐

❶ ❷ ❸ ❹ ❺

- Option/Semi-standard: Select one each for **a** to **f**.
- Option/Semi-standard symbol: When more than one specification is required, indicate in alphanumeric order.

Example) AFM30-03BD-R-A

● **Made to Order**
(Refer to pages 51 and 52 for details.)

			Symbol	Description	❶ Body size 20	30	40
❷	Pipe thread type		—	Rc	●	●	●
			N Note 1)	NPT	●	●	●
			F Note 2)	G	●	●	●
			+				
❸	Port size		01	1/8	●	—	—
			02	1/4	●	●	●
			03	3/8	—	●	●
			04	1/2	—	—	●
			06	3/4	—	—	●
			+				
❹	Option	a Mounting	—	Without mounting option	●	●	●
			B Note 3)	With bracket	●	●	●
			+				
		b Float type auto drain	—	Without auto drain	●	●	●
			C Note 4)	N.C. (Normally closed) Drain port is closed when pressure is not applied.	●	●	●
			D Note 5)	N.O. (Normally open) Drain port is open when pressure is not applied.	—	●	●
			+				
❺	Semi-standard	c Bowl Note 6)	—	Polycarbonate bowl	●	●	●
			2	Metal bowl	●	●	●
			6	Nylon bowl	●	●	●
			8	Metal bowl with level gauge	—	●	●
			C	With bowl guard	●	— Note 7)	— Note 7)
			6C	With bowl guard (Nylon bowl)	●	— Note 8)	— Note 8)
			+				
		d Drain port Note 12)	—	With drain cock	●	●	●
			J Note 9)	Drain guide 1/8	●	—	—
				Drain guide 1/4	—	●	●
			W Note 13)	Drain cock with barb fitting (for ø6 x ø4 nylon tube)	—	●	●
			+				
		e Flow direction	—	Flow direction: Left to right	●	●	●
			R	Flow direction: Right to left	●	●	●
			+				
		f Pressure unit	—	Name plate and caution plate for bowl in imperial units: MPa	●	●	●
			Z Note 10)	Name plate and caution plate for bowl in imperial units: psi, °F	○ Note 11)	○ Note 11)	○ Note 11)

Note 1) Drain guide is NPT1/8 (applicable to the AFM20-A, AFD20-A) and NPT1/4 (applicable to the AFM30-A/40-A, AFD30-A/40-A).
The auto drain port comes with ø3/8" One-touch fitting (applicable to the AFM30-A/40-A, AFD30-A/40-A).
Note 2) Drain guide is G1/8 (applicable to the AFM20-A, AFD20-A) and G1/4 (applicable to the AFM30-A/40-A, AFD30-A/40-A).
Note 3) A bracket is not assembled and supplied loose at the time of shipment. Including 2 mounting screws
Note 4) When pressure is not applied, condensate which does not start the auto drain mechanism will be left in the bowl.
Releasing the residual condensate before ending operations for the day is recommended.
Note 5) If the compressor is small (0.75 kW, discharge flow is less than 100 L/min [ANR]), air leakage from the drain cock may occur during start of operations. N.C. type is recommended.
Note 6) Refer to Chemical data on page 48 for chemical resistance of the bowl.
Note 7) A bowl guard is provided as standard equipment (polycarbonate).
Note 8) A bowl guard is provided as standard equipment (nylon).
Note 9) Without a valve function
Note 10) For pipe thread type: NPT.
Note 11) ○: For pipe thread type: NPT only
Note 12) The combination of float type auto drain: C and D is not available.
Note 13) The combination of metal bowl: 2 and 8 is not available.

Standard Specifications

Model		AFM20-A AFD20-A	AFM30-A AFD30-A	AFM40-A AFD40-A	AFM40-06-A AFD40-06-A
Port size		1/8, 1/4	1/4, 3/8	1/4, 3/8, 1/2	3/4
Fluid		Air			
Ambient and fluid temperature		– 5 to 60°C (with no freezing)			
Proof pressure		1.5 MPa			
Maximum operating pressure		1.0 MPa			
Minimum operating pressure		0.05 MPa			
Nominal filtration rating	**AFM20-A to AFM40-06-A**	0.3 μm (99.9% filtered particle size)			
	AFD20-A to AFD40-06-A	0.01 μm (99.9% filtered particle size)			
Outlet side oil mist concentration	**AFM20-A to AFM40-06-A**	Max. 1.0 mg/m³ (ANR) (≈ 0.8 ppm) Note 2) Note 3)			
	AFD20-A to AFD40-06-A	Max. 0.1 mg/m³ (ANR) (Before saturated with oil 0.01 mg/m³ (ANR) or less ≈ 0.008 ppm) Note 2) Note 3)			
Rated flow (L/min (ANR)) Note 1)	**AFM20-A to AFM40-06-A**	200	450	1100	
	AFD20-A to AFD40-06-A	120	240	600	
Drain capacity (cm³)		8	25	45	
Bowl material		Polycarbonate			
Bowl guard		Semi-standard (Steel)	Standard (Polycarbonate)		
Weight [kg]		0.09	0.19	0.38	0.43

Note 1) Conditions: Inlet pressure: 0.7 MPa; The rated flow varies depending on the inlet pressure.
Keep the air flow within the rated flow to prevent an outflow of lubricant to the outlet side.
Note 2) When the compressor oil mist discharge concentration is 30 mg/m³ (ANR).
Note 3) Bowl seal and other O-rings are slightly lubricated.

Options/Part No.

Optional specifications		Model			
		AFM20-A AFD20-A	AFM30-A AFD30-A	AFM40-A AFD40-A	AFM40-06-A AFD40-06-A
Bracket assembly Note 1)		AF22P-050AS	AF32P-050AS	AF42P-050AS	AF42P-070AS
Float type auto drain Note 2) Note 3)	**N.C.**	AD27-A	AD37-A	AD47-A	
	N.O.	—	AD38-A	AD48-A	

Note 1) Assembly of a bracket and 2 mounting screws
Note 2) Minimum operating pressure: N.O. type–0.1 MPa; N.C. type–0.1 MPa (AD27-A) and 0.15 MPa (AD37-A/AD47-A).
Please consult with SMC separately for psi and °F unit display specifications.
Note 3) Please consult with SMC for details on drain piping to fit NPT or G port sizes.

Bowl Assembly/Part No.

Bowl material	Drain discharge mechanism	Drain port	Other	Model			
				AFM20-A AFD20-A	AFM30-A AFD30-A	AFM40-A AFD40-A	AFM40-06-A AFD40-06-A
Polycarbonate bowl	Manual discharge	With drain cock	—	C2SF-A	—	—	
			With bowl guard	C2SF-C-A	C3SF-A	C4SF-A	
		Drain cock with barb fitting	With bowl guard	—	C3SF-W-A	C4SF-W-A	
		With drain guide (without valve function)	—	C2SF□-J-A	—	—	
			With bowl guard	C2SF□-CJ-A	C3SF□-J-A	C4SF□-J-A	
	Automatic Note) discharge (Auto drain)	Normally closed (N.C.)	—	AD27-A	—	—	
			With bowl guard	AD27-C-A	AD37□-A	AD47□-A	
		Normally open (N.O.)	With bowl guard	—	AD38□-A	AD48□-A	
Nylon bowl	Manual discharge	With drain cock	—	C2SF-6-A	—	—	
			With bowl guard	C2SF-6C-A	C3SF-6-A	C4SF-6-A	
		Drain cock with barb fitting	With bowl guard	—	C3SF-6W-A	C4SF-6W-A	
		With drain guide (without valve function)	—	C2SF□-6J-A	—	—	
			With bowl guard	C2SF□-6CJ-A	C3SF□-6J-A	C4SF□-6J-A	
	Automatic Note) discharge (Auto drain)	Normally closed (N.C.)	—	AD27-6-A	—	—	
			With bowl guard	AD27-6C-A	AD37□-6-A	AD47□-6-A	
		Normally open (N.O.)	With bowl guard	—	AD38□-6-A	AD48□-6-A	
Metal bowl	Manual discharge	With drain cock	—	C2SF-2-A	C3SF-2-A	C4SF-2-A	
			With level gauge	—	C3LF-8-A	C4LF-8-A	
		With drain guide (without valve function)	—	C2SF□-2J-A	C3SF□-2J-A	C4SF□-2J-A	
			With level gauge	—	C3LF□-8J-A	C4LF□-8J-A	
	Automatic Note) discharge (Auto drain)	Normally closed (N.C.)	—	AD27-2-A	AD37□-2-A	AD47□-2-A	
			With level gauge	—	AD37□-8-A	AD47□-8-A	
		Normally open (N.O.)	—	—	AD38□-2-A	AD48□-2-A	
			With level gauge	—	AD38□-8-A	AD48□-8-A	

Note) Minimum operating pressure: N.O. type–0.1 MPa (AD38-A, AD48-A); N.C. type–0.1 MPa (AD17-A, AD27-A) and 0.15 MPa (AD37-A, AD47-A).
Bowl assembly for the AFM20-A to AFM40-06-A, AFD20-A to AFD40-06-A models comes with a bowl seal.
□ in bowl assembly part numbers indicates a pipe thread type (applicable tubing for auto drain). No indication is necessary for Rc thread; however, indicate N for NPT thread, and F for G thread. (For auto drain, —: ø10, N: ø3/8")
Please consult with SMC separately for psi and °F unit display specifications.

Flow-rate Characteristics (Representative values)

When saturated with oil
Initial state

AFM20-A

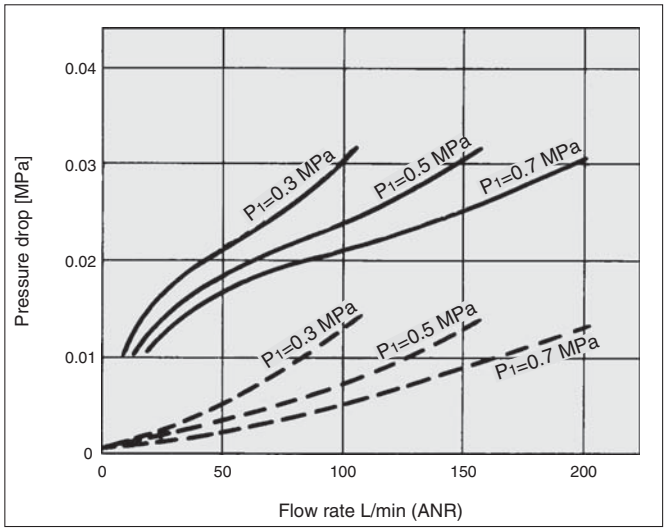

AFD20-A

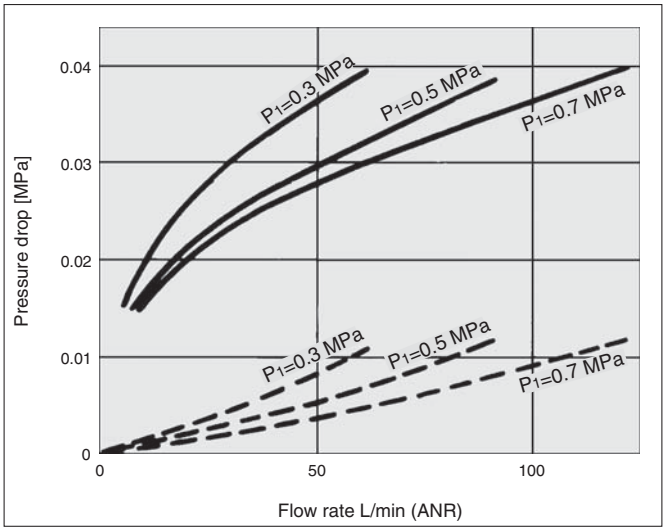

AFM30-A

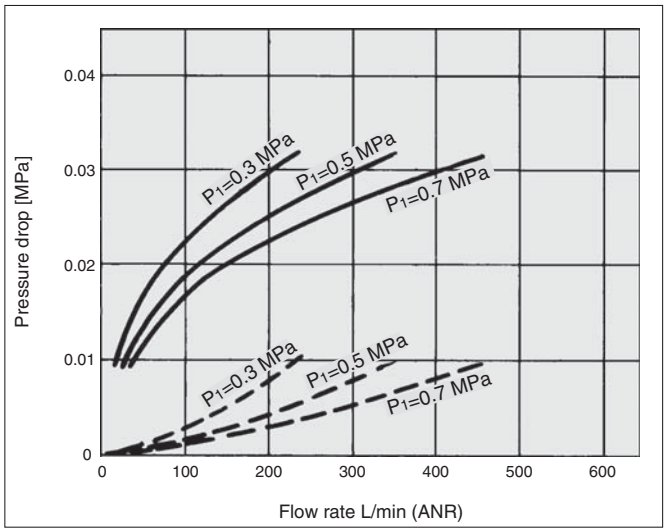

AFD30-A

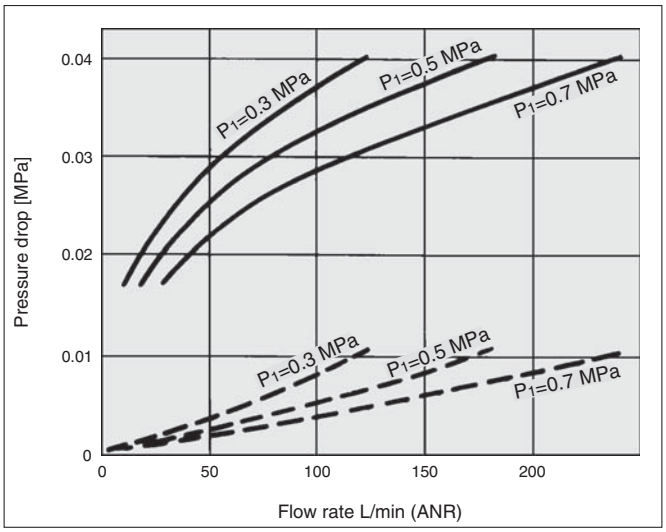

AFM40-A

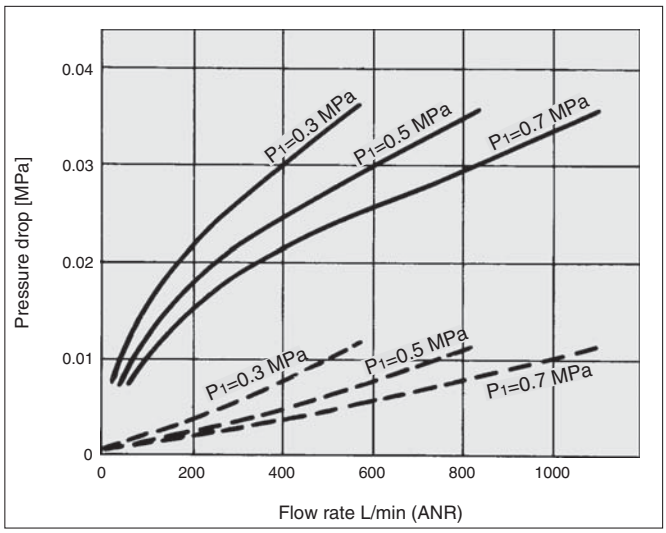

AFD40-A

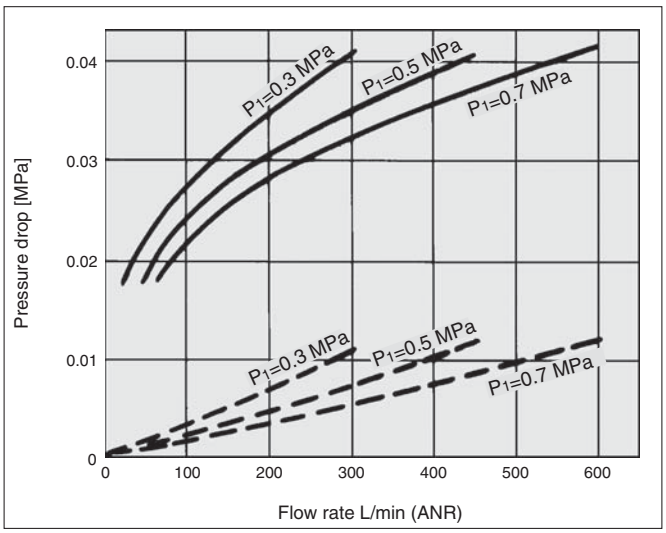

⚠ Specific Product Precautions

Be sure to read this before handling. Refer to the back cover for Safety Instructions, "Handling Precautions for SMC Products" and the Operation Manual for F.R.L. Precautions, http://www.smcworld.com

Design/Selection

⚠ Warning

1. The standard bowl for the air filter, filter regulator, and lubricator, as well as the sight dome for the lubricator are made of polycarbonate. Do not use in an environment where they are exposed to or come in contact with organic solvents, chemicals, cutting oil, synthetic oil, alkali, and thread lock solutions.

Effects of atmosphere of organic solvents and chemicals, and where these elements are likely to adhere to the equipment.
Chemical data for substances causing degradation (Reference)

Type	Chemical name	Application examples	Material	
			Polycar-bonate	Nylon
Acid	Hydrochloric acid Sulfuric acid, Phosphoric acid Chromic acid	Acid washing liquid for metals	△	×
Alkaline	Sodium hydroxide (Caustic soda) Potash Calcium hydroxide (Slack lime) Ammonia water Carbonate of soda	Degreasing of metals Industrial salts Water-soluble cutting oil	×	○
Inorganic salts	Sodium sulfide Sulfate of potash Sulfate of soda	—	×	△
Chlorine solvents	Carbon tetrachloride Chloroform Ethylene chloride Methylene chloride	Cleansing liquid for metals Printing ink Dilution	×	△
Aromatic series	Benzene Toluene Paint thinner	Coatings Dry cleaning	×	△
Ketone	Acetone Methyl ethyl ketone Cyclohexane	Photographic film Dry cleaning Textile industries	×	×
Alcohol	Ethyl alcohol IPA Methyl alcohol	Antifreeze Adhesives	△	×
Oil	Gasoline Kerosene	—	×	○
Ester	Phthalic acid dimethyl Phthalic acid diethyl Acetic acid	Synthetic oil Anti-rust additives	×	○
Ether	Methyl ether Ethyl ether	Brake oil additives	×	○
Amino	Methyl amino	Cutting oil Brake oil additives Rubber accelerator	×	×
Others	Thread-lock fluid Seawater Leak tester	—	×	△

○: Essentially safe △: Some effects may occur. ×: Effects will occur.

When the above factors are present, or there is some doubt, use a metal bowl for safety.

Air Supply

⚠ Caution

1. Install an air filter (Series AF) as a pre-filter on the inlet side of the mist separator to prevent premature clogging.
2. Install a mist separator (Series AFM) as a pre-filter on the inlet side of the micro mist separator to prevent premature clogging.
3. Do not install on the inlet side of the dryer as this can cause premature clogging of the element.

Maintenance

⚠ Warning

1. Replace the element every 2 years or when the pressure drop becomes 0.1 MPa, whichever comes first, to prevent damage to the element.

Mounting/Adjustment

⚠ Caution

1. When the bowl is installed on the mist separator (AFM30-A/AFM40-A), or micro mist separator (AFD30-A/AFD40-A), install them so that the lock button lines up to the groove of the front (or the back) of the body to avoid drop or damage of the bowl.

Design

⚠ Caution

1. Design the system so that the mist separator is installed in a pulsation-free location. The difference between internal and external pressure inside the element should be kept within 0.1 MPa, as exceeding this value could cause damage.

Selection

⚠ Caution

1. Do not allow air flow that exceeds the rated flow. If the air flow is allowed outside the range of the rated flow even momentarily, drainage and lubricant may splash at the outlet side or cause damage to the component.
2. Do not use in a low pressure application (such as a blower). An F.R.L. unit has its own minimum operating pressure depending on the equipment and is designed specifically to function with compressed air. If used below the minimum operating pressure, a loss of performance and malfunction can occur. Please contact SMC if an application under such conditions cannot be avoided.

Construction

AFM20-A
AFD20-A

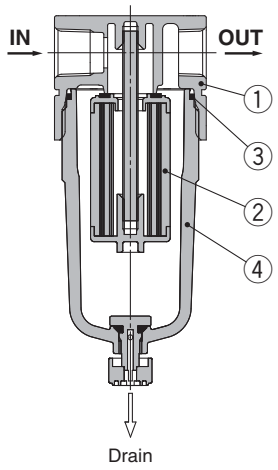

AFM30-A to AFM40-06-A
AFD30-A to AFD40-06-A

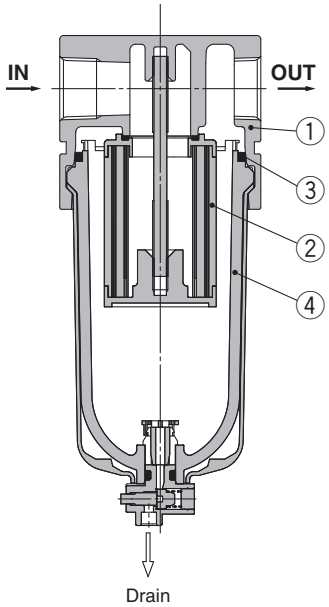

Component Parts

No.	Description	Material	Model	Colour
1	**Body**	Aluminum die-cast	AFM20-A to AFM40-06-A AFD20-A to AFD40-06-A	White

Replacement Parts

No.	Description		Material	Part no.			
				AFM20-A AFD20-A	**AFM30-A AFD30-A**	**AFM40-A AFD40-A**	**AFM40-06-A AFD40-06-A**
2	**Element assembly**	AFM20 to 40	—	AFM20P-060AS	AFM30P-060AS	AFM40P-060AS	
		AFD20 to 40	—	AFD20P-060AS	AFD30P-060AS	AFD40P-060AS	
3	**Bowl seal**		NBR	C2SFP-260S	C32FP-260S	C42FP-260S	
4	**Bowl assembly** Note)		Polycarbonate	C2SF-A	C3SF-A	C4SF-A	

Note) Bowl seal is included. Please contact SMC regarding the supply of bowl assembly with psi and °F unit display specifications.

Dimensions

AFM20-A
AFD20-A

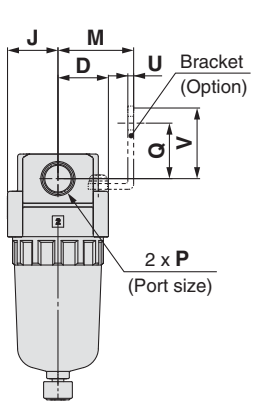

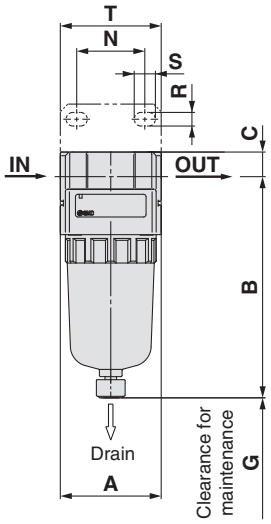

AFM30-A to AFM40-06-A
AFD30-A to AFD40-06-A

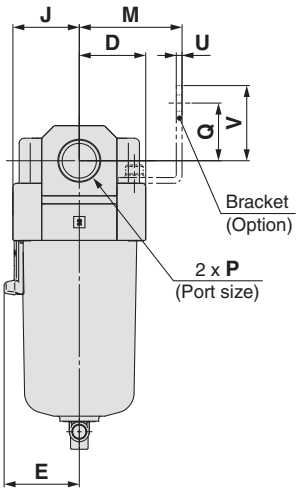

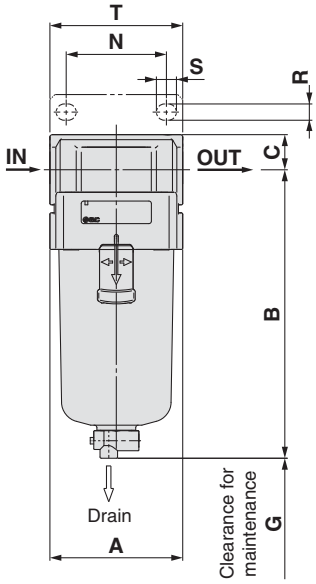

Applicable model	AFM20-A/AFD20-A				AFM30-A to AFM40-06-A/AFD30-A to AFD40-06-A
Optional/Semi-standard specifications	With auto drain (N.C.)	With drain guide	Metal bowl	Metal bowl with drain guide	With auto drain (N.O./N.C.)
Dimensions	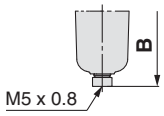	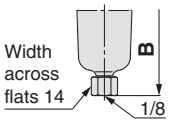	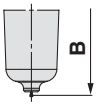	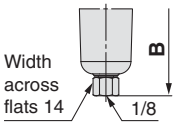	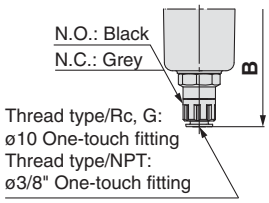

Applicable model	AFM30-A to AFM40-06-A/AFD30-A to AFD40-06-A					
Optional/Semi-standard specifications	Metal bowl	Metal bowl with drain guide	Metal bowl with level gauge	Metal bowl with level gauge, with drain guide	With drain guide	Drain cock with barb fitting
Dimensions	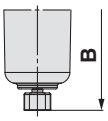	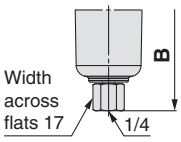	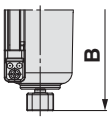	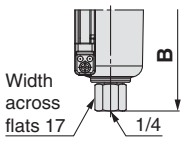	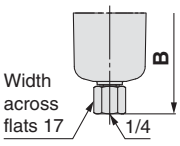	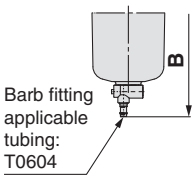

Model	Standard specifications								Optional specifications								
									Bracket mount								With auto drain
	P	A	B	C	D	E	G	J	M	N	Q	R	S	T	U	V	B
AFM20-A/AFD20-A	1/8, 1/4	40	87.6	9.8	20	—	40	20	30	27	22	5.4	8.4	40	2.3	28	104.9
AFM30-A/AFD30-A	1/4, 3/8	53	115.1	14	26.7	30	50	26.7	41	40	23	6.5	8	53	2.3	30	156.8
AFM40-A/AFD40-A	1/4, 3/8, 1/2	70	147.1	18	35.5	38.4	75	35.5	50	54	26	8.5	10.5	70	2.3	35	186.9
AFM40-06-A/AFD40-06-A	3/4	75	149.1	20	35.5	38.4	75	35.5	50	54	25	8.5	10.5	70	2.3	34	188.9

Model	Semi-standard specifications					
	With barb fitting	With drain guide	Metal bowl	Metal bowl with drain guide	Metal bowl with level gauge	Metal bowl with level gauge, with drain guide
	B	B	B	B	B	B
AFM20-A/AFD20-A	—	91.4	87.4	93.9	—	—
AFM30-A/AFD30-A	123.6	121.9	117.6	122.1	137.6	142.1
AFM40-A/AFD40-A	155.6	153.9	149.6	154.1	169.6	174.1
AFM40-06-A/AFD40-06-A	157.6	155.9	151.6	156.1	171.6	176.1

Mist Separator/*AFM20-A to AFM40-06-A*
Micro Mist Separator/*AFD20-A to AFD40-06-A*
Made to Order

Made to Order

Please contact SMC for detailed dimensions, specifications and lead times.

❶ Long Bowl

Drain capacity is greater than that of standard models.

Applicable Model/Drain Capacity

Model	AFM20-A, AFD20-A	AFM30-A, AFD30-A	AFM40-A, AFD40-A	AFM40-06-A, AFD40-06-A
Port size	1/8, 1/4	1/4, 3/8	1/4, 3/8, 1/2	3/4
Drain capacity [cm³]	19	43	88	

Note) Please consult with SMC for dimensions.

AFM 30 - ☐ 03 ☐ - ☐ - A - X64

AFD 30 - ☐ 03 ☐ - ☐ - A - X64

❶ ❷ ❸ ❹ ❺ •Long bowl

- Semi-standard: Select one each for **a** to **d**.
- Option/Semi-standard symbol: When more than one specification is required, indicate in alphanumeric order.

Example) AFM30-03B-2R-A-X64

		Symbol	Description	❶ Body size 20	30	40
❷	Pipe thread type	—	Rc	●	●	●
		N Note 1)	NPT	●	●	●
		F Note 2)	G	●	●	●
		+				
❸	Port size	01	1/8	●	—	—
		02	1/4	●	●	●
		03	3/8	—	●	●
		04	1/2	—	—	●
		06	3/4	—	—	●
		+				
❹	Option (Mounting)	—	Without mounting option	●	●	●
		B Note 3)	With bracket	●	●	●
		+				
❺ Semi-standard	a Bowl Note 4)	—	Polycarbonate bowl	●	●	●
		2	Metal bowl	●	●	●
		6	Nylon bowl	●	●	●
		C	With bowl guard	●	— Note 5)	— Note 5)
		6C	With bowl guard (Nylon bowl)	●	— Note 6)	— Note 6)
		+				
	b Drain port	—	With drain cock	●	●	●
		J Note 7)	Drain guide 1/8	●	—	—
			Drain guide 1/4	—	●	●
		W Note 8)	Drain cock with barb fitting (for ø6 x ø4 nylon tube)	—	●	●
		+				
	c Flow direction	—	Flow direction: Left to right	●	●	●
		R	Flow direction: Right to left	●	●	●
		+				
	d Pressure unit	—	Name plate and caution plate for bowl in imperial units: MPa	●	●	●
		Z Note 9)	Name plate and caution plate for bowl in imperial units: psi, °F	○ Note 10)	○ Note 10)	○ Note 10)

Note 1) Drain guide is NPT1/8 (applicable to the AFM20-A, AFD20-A) and NPT1/4 (applicable to the AFM30-A/40-A, AFD30-A/40-A).
Note 2) Drain guide is G1/8 (applicable to the AFM20-A, AFD20-A) and G1/4 (applicable to the AFM30-A/40-A, AFD30-A/40-A).
Note 3) A bracket is not assembled and supplied loose at the time of shipment. Including 2 mounting screws.
Note 4) Refer to Chemical data on page 48 for chemical resistance of the bowl.
Note 5) A bowl guard is provided as standard equipment (polycarbonate).
Note 6) A bowl guard is provided as standard equipment (nylon).
Note 7) Without a valve function
Note 8) The combination of metal bowl: 2 is not available.
Note 9) For pipe thread type: NPT.
Note 10) ○: For pipe thread type: NPT only

Mist Separator/*AFM20-A to AFM40-06-A*
Micro Mist Separator/*AFD20-A to AFD40-06-A*
Made to Order

Made to Order

Please contact SMC for detailed dimensions, specifications and lead times.

❷ With Element Service Indicator

Clogging status of elements can be checked visually.

Applicable Model

Model	AFM20-A, AFD20-A	AFM30-A, AFD30-A	AFM40-A, AFD40-A	AFM40-06-A, AFD40-06-A
Port size	1/8, 1/4	1/4, 3/8	1/4, 3/8, 1/2	3/4

AFM 30 - ☐ 03 ☐ - ☐ - A - X2141

AFD 30 - ☐ 03 ☐ - ☐ - A - X2141

❶ ❷ ❸ ❹ ❺

• **With element service indicator**

- Option/Semi-standard: Select one each for **a** to **f**.
- Option/Semi-standard symbol: When more than one specification is required, indicate in alphanumeric order.

Example) AFM30-03BD-2R-A-X2141

A special body type is required to mount the element service indicator. It cannot be mounted on a standard body.

			Symbol	Description	❶ Body size 20	30	40
❷	Pipe thread type		—	Rc	●	●	●
			N Note 1)	NPT	●	●	●
			F Note 2)	G	●	●	●
			+				
❸	Port size		01	1/8	●	—	—
			02	1/4	●	●	●
			03	3/8	—	●	●
			04	1/2	—	—	●
			06	3/4	—	—	●
			+				
❹	Option	a Mounting	—	Without mounting option	●	●	●
			B Note 3)	With bracket	●	●	●
			+				
		b Float type auto drain	—	Without auto drain	●	●	●
			C Note 4)	N.C. (Normally closed) Drain port is closed when pressure is not applied.	●	●	●
			D Note 5)	N.O. (Normally open) Drain port is open when pressure is not applied.	—	●	●
			+				
❺	Semi-standard	c Bowl Note 6)	—	Polycarbonate bowl	●	●	●
			2	Metal bowl	●	●	●
			6	Nylon bowl	●	●	●
			8	Metal bowl with level gauge	—	●	●
			C	With bowl guard	●	— Note 7)	— Note 7)
			6C	With bowl guard (Nylon bowl)	●	— Note 8)	— Note 8)
			+				
		d Drain port Note 12)	—	With drain cock	●	●	●
			J Note 9)	Drain guide 1/8	●	—	—
				Drain guide 1/4	—	●	●
			W Note 13)	Drain cock with barb fitting (for ø6 x ø4 nylon tube)	—	●	●
			+				
		e Flow direction	—	Flow direction: Left to right	●	●	●
			R	Flow direction: Right to left	●	●	●
			+				
		f Pressure unit	—	Name plate and caution plate for bowl in imperial units: MPa	●	●	●
			Z Note 10)	Name plate and caution plate for bowl in imperial units: psi, °F	○ Note 11)	○ Note 11)	○ Note 11)

Note 1) Drain guide is NPT1/8 (applicable to the AFM20-A, AFD20-A) and NPT1/4 (applicable to the AFM30-A/40-A, AFD30-A/40-A).
The auto drain port comes with ø3/8" One-touch fitting (applicable to the AFM30-A/40-A, AFD30-A/40-A).

Note 2) Drain guide is G1/8 (applicable to the AFM20-A, AFD20-A) and G1/4 (applicable to the AFM30-A/40-A, AFD30-A/40-A).

Note 3) A bracket is not assembled and supplied loose at the time of shipment. Including 2 mounting screws

Note 4) When pressure is not applied, condensate which does not start the auto drain mechanism will be left in the bowl. Releasing the residual condensate before ending operations for the day is recommended.

Note 5) If the compressor is small (0.75 kW, discharge flow is less than 100 L/min [ANR]), air leakage from the drain cock may occur during start of operations. N.C. type is recommended.

Note 6) Refer to Chemical data on page 48 for chemical resistance of the bowl.

Note 7) A bowl guard is provided as standard equipment (polycarbonate).

Note 8) A bowl guard is provided as standard equipment (nylon).

Note 9) Without a valve function

Note 10) For pipe thread type: NPT.

Note 11) ○: For pipe thread type: NPT only

Note 12) The combination of float type auto drain: C and D is not available.

Note 13) The combination of metal bowl: 2 and 8 is not available.

Modular Type Regulator

Series AR

Regulator Series AR

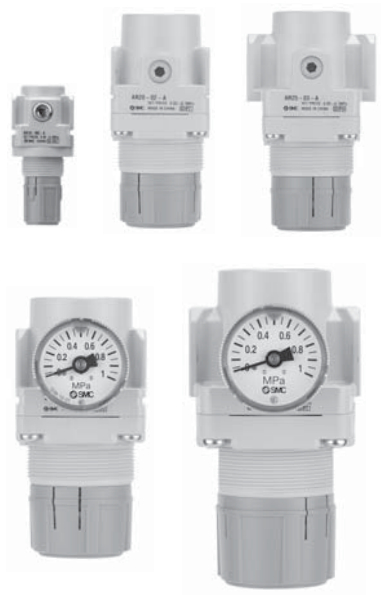

P.55 to 62

Model	Port size	Options
AR10-A	M5 x 0.8	Bracket Round type pressure gauge Set nut (for panel mount)*
AR20-A	1/8, 1/4	
AR25-A	1/4, 3/8	
AR30-A		
AR40-A	1/4, 3/8, 1/2	
AR40-06-A	3/4	

* The AR20-A to AR40-06-A are not compatible with existing AR series.

Regulator
AR10-A to AR40-A

Symbol
Regulator

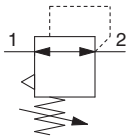

AR10-A AR20-A AR30-A

How to order

AR 30 – ❷ 03 BG – ❺ – A – ●

❶ ❷ ❸ ❹ ❺

- Option/Semi-standard: Select one each for **a** to **g**.
- Option/Semi-standard symbol: When more than one specification is required, indicate in alphanumeric order.

Example) AR30-03BG-1N-A

● **Made to Order**
(Refer to pages 61 and 62 for details.)

			Symbol	Description	❶ Body size 10	20	25	30	40
❷	Pipe thread type		—	Metric thread (M5)	●	—	—	—	—
				Rc	—	●	●	●	●
			N	NPT	—	●	●	●	●
			F	G	—	●	●	●	●
			+						
❸	Port size		M5	M5	●	—	—	—	—
			01	1/8	—	●	—	—	—
			02	1/4	—	●	●	●	●
			03	3/8	—	—	●	●	●
			04	1/2	—	—	—	—	●
			06	3/4	—	—	—	—	●
			+						
❹	Option Note 1)	a Mounting	—	Without mounting option	●	●	●	●	●
			B Note 2)	With bracket	●	●	●	●	●
			H	With set nut (for panel mount) Note 3)	●	●	●	●	●
			+						
		b Pressure gauge Note 4)	—	Without pressure gauge	●	●	●	●	●
			G	Round type pressure gauge (without limit indicator)	●	—	—	—	—
				Round type pressure gauge (with limit indicator)	—	●	●	●	●
			M	Round type pressure gauge (with colour zone)	—	●	●	●	●
			+						
❺	Semi-standard	c Set pressure Note 5)	—	0.05 to 0.7 MPa setting	●	●	●	●	●
			1	0.02 to 0.2 MPa setting	●	●	●	●	●
			+						
		d Exhaust mechanism	—	Relieving type	●	●	●	●	●
			N	Non-relieving type	●	●	●	●	●
			+						
		e Flow direction	—	Flow direction: Left to right	●	●	●	●	●
			R	Flow direction: Right to left	●	●	●	●	●
			+						
		f Knob	—	Downward	●	●	●	●	●
			Y	Upward	●	●	●	●	●
			+						
		g Pressure unit	—	Name plate and pressure gauge in imperial units: MPa	●	●	●	●	●
			Z Note 6)	Name plate and pressure gauge in imperial units: psi	○ Note 7)	○ Note 7)	○ Note 7)	○ Note 7)	○ Note 7)

Note 1) Option B, G, H, M are not assembled and supplied loose at the time of shipment.
Note 2) Assembly of a bracket and set nuts
Note 3) Only for the AR20-A to 40-A
Note 4) When the pressure gauge is attached, a 1.0 MPa pressure gauge will be fitted for standard (0.7 MPa) type. 0.4 MPa pressure gauge for 0.2 MPa type (1.0 MPa pressure gauge only for the AR10-A).
Note 5) Pressure can be set higher than the specification pressure in some cases, but use pressure within the specification range.
Note 6) For pipe thread type: NPT
Cannot be used with M: Round pressure gauge (with colour zone). Available by request for special.
Note 7) ○: For pipe thread type: M5, NPT only

Standard Specifications

Model	AR10-A	AR20-A	AR25-A	AR30-A	AR40-A	AR40-06-A
Port size	M5 x 0.8	1/8, 1/4	1/4, 3/8	1/4, 3/8	1/4, 3/8, 1/2	3/4
Pressure gauge port size	1/16 Note)	1/8				
Fluid	Air					
Ambient and fluid temperature	– 5 to 60°C (with no freezing)					
Proof pressure	1.5 MPa					
Maximum operating pressure	1.0 MPa					
Set pressure range	0.05 to 0.7 MPa					
Construction	Relieving type					
Weight [kg]	0.06	0.17	0.19	0.34	0.58	0.60

Note) Use a bushing (part no: 131368) when connecting the R1/8 pressure gauge to the Rc1/16.

Options/Part No.

Optional specifications			Model					
			AR10-A	AR20-A	AR25-A	AR30-A	AR40-A	AR40-06-A
Bracket assembly Note 1)			AR12P-270AS	AR22P-270AS	AR27P-270AS	AR32P-270AS	AR42P-270AS	AR42P-270AS
Set nut			AR12P-260S	AR22P-260S	AR22P-260S	AR32P-260S	AR42P-260S	AR42P-260S
Pressure gauge	Round type Note 2)	Standard	G27-10-R1	G36-10-□01			G46-10-□01	
		0.02 to 0.2 MPa setting	G27-10-R1 Note 3)	G36-4-□01			G46-4-□01	
	Round type (with colour zone) Note 2)	Standard	—	G36-10-□01-L			G46-10-□01-L	
		0.02 to 0.2 MPa setting	—	G36-4-□01-L			G46-4-□01-L	

Note 1) Assembly of a bracket and set nuts
Note 2) □ in round pressure gauge part numbers indicates a pipe thread type. No indication is necessary for R; however, indicate N for NPT.
Please contact SMC regarding the pipe thread type NPT and the supply of pressure gauge with psi unit display specifications.
Note 3) Standard pressure gauge

⚠ Specific Product Precautions

Be sure to read this before handling. Refer to the back cover for Safety Instructions, "Handling Precautions for SMC Products" and the Operation Manual for F.R.L. Precautions, http://www.smc.eu

Selection

⚠ Warning

1. Although exhaust of the residual pressure to the inlet side is possible when eliminating the inlet pressure, exhaust is not possible when the set pressure is 0.15 MPa or less. Use the regulator with backflow function.

Maintenance

⚠ Warning

1. When using the regulator between a solenoid valve and an actuator, check the pressure gauge periodically. Sudden pressure fluctuations may shorten the durability of the pressure gauge. A digital pressure gauge is recommended for such situation or as deemed necessary.

Mounting/Adjustment

⚠ Warning

1. Set the regulator while verifying the displayed values of the inlet and outlet pressure gauges. Turning the regulator knob excessively can cause damage to the internal parts.
2. Do not use tools on the pressure regulator knob as this may cause damage. It must be operated manually.

⚠ Caution

1. Be sure to unlock the knob before adjusting the pressure and lock it after setting the pressure. Failure to follow this procedure can cause damage to the knob and the outlet pressure may fluctuate.
   - Pull the pressure regulator knob to unlock. (You can visually verify this with the "orange mark" that appears in the gap.)
   - Push the pressure regulator knob to lock. When the knob is not easily locked, turn it left and right a little and then push it (when the knob is locked, the "orange mark", i.e., the gap will disappear).
2. Pulsation will be generated when the difference between the inlet and the outlet pressure is large. In this case, reduce the pressure difference between the inlet and the outlet. Please consult with SMC if the pulsation problem is not resolved.

Flow-rate Characteristics (Representative values)

Condition: Inlet pressure 0.7 MPa

AR10-A

M5

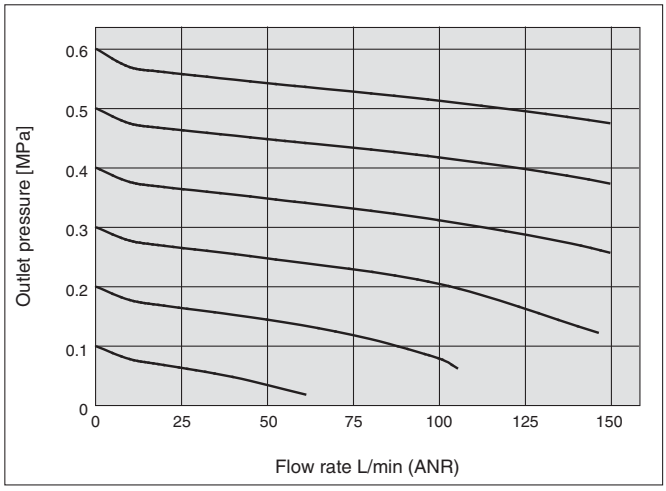

AR20-A

Rc1/4

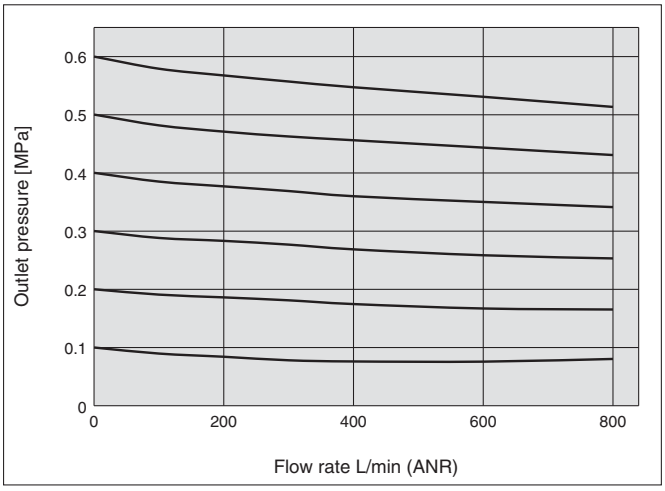

AR25-A

Rc3/8

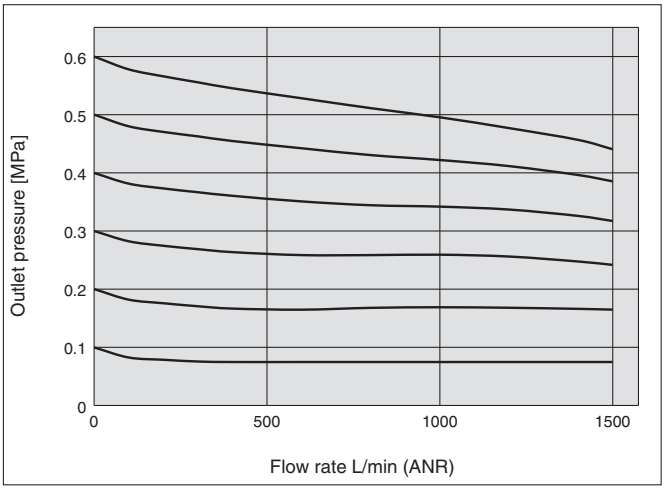

AR30-A

Rc3/8

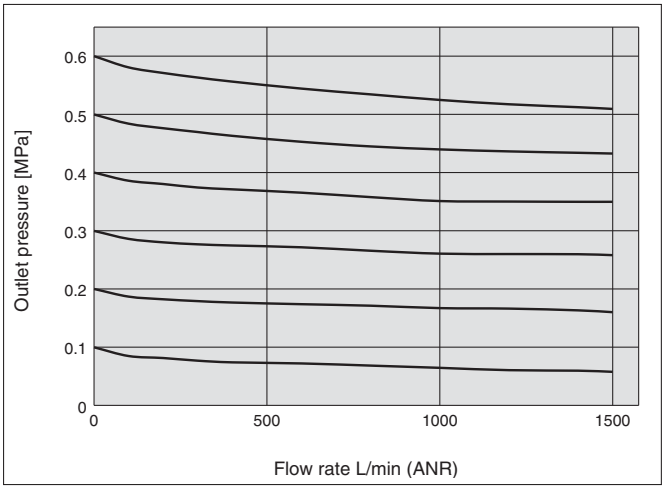

AR40-A

Rc1/2

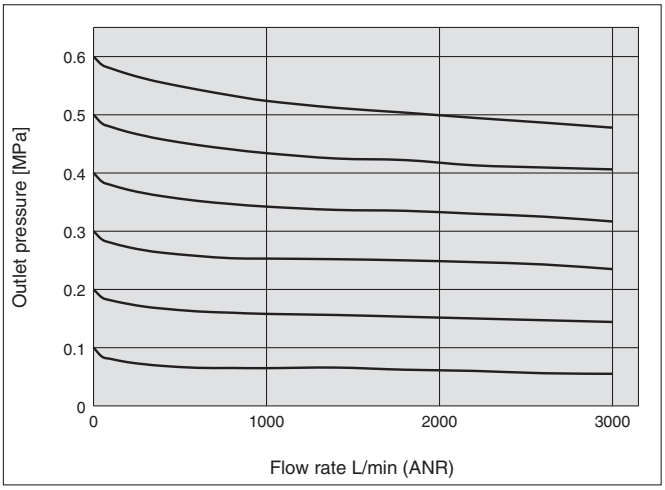

AR40-06-A

Rc3/4

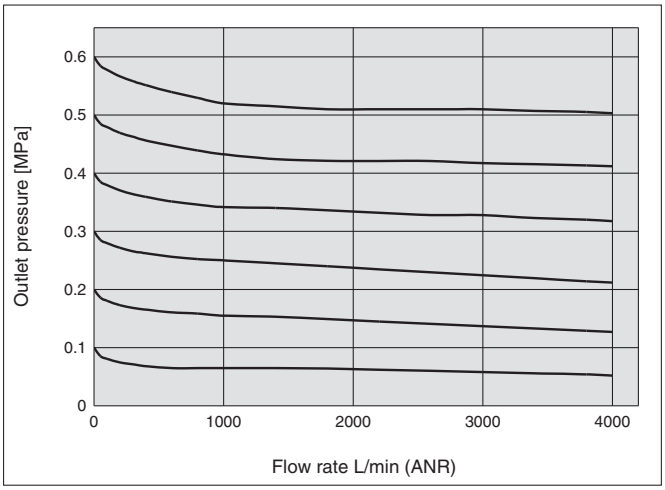

Pressure Characteristics (Representative values)

Conditions: Inlet pressure 0.7 MPa, Outlet pressure 0.2 MPa, Flow rate 20 L/min (ANR)

AR10-A

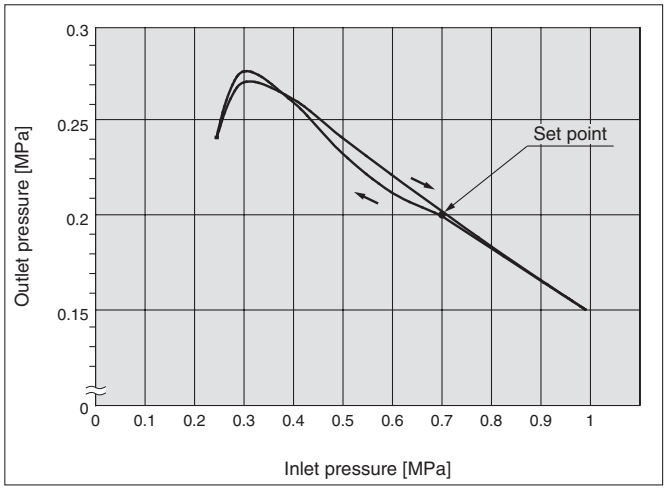

AR20-A

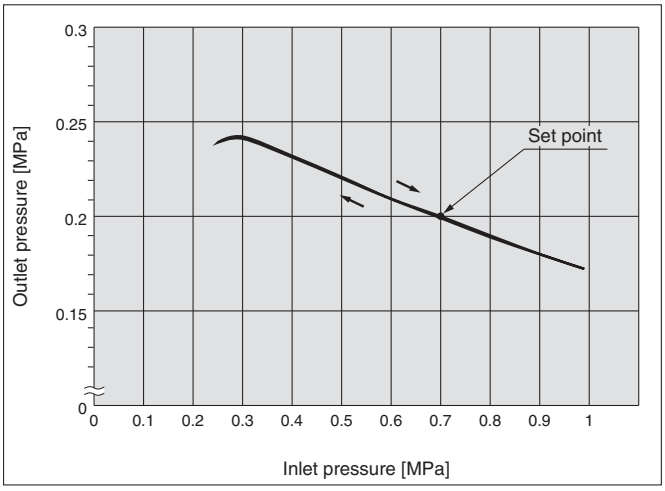

AR25-A

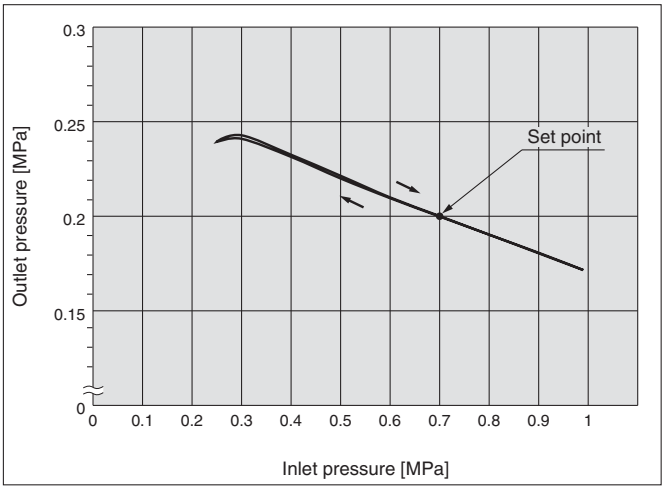

AR30-A

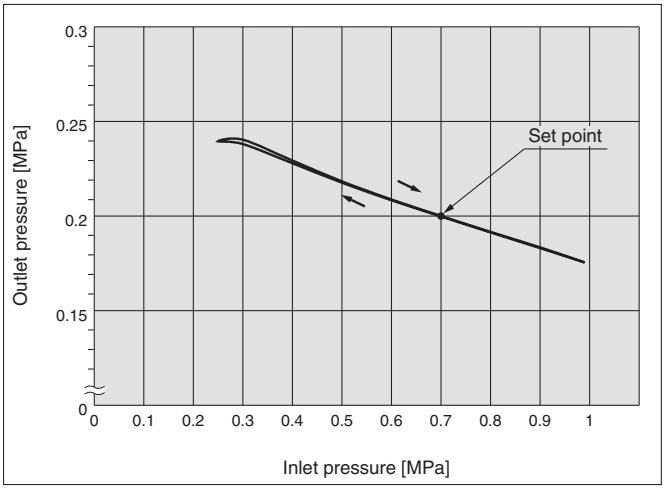

AR40-A/AR40-06-A

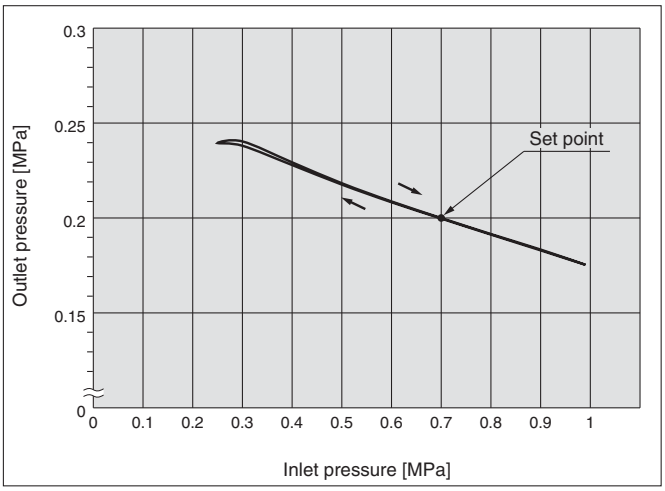

Construction

AR10-A

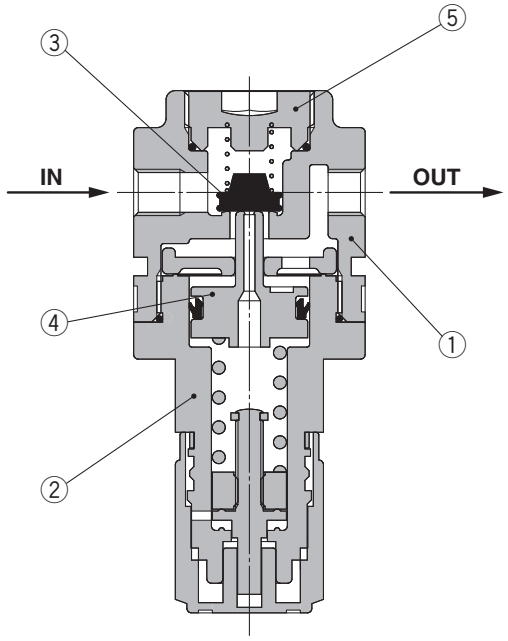

AR20-A to 40-06-A

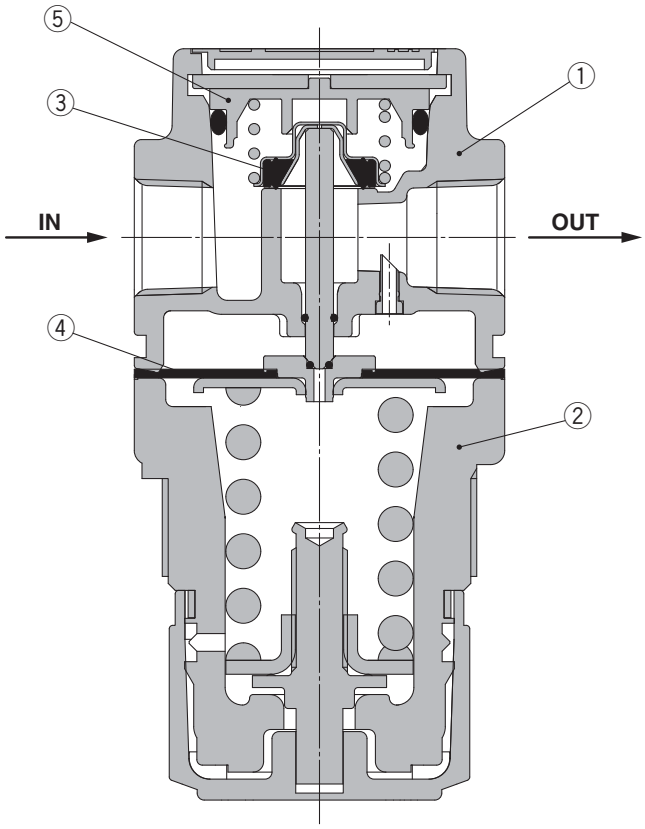

Component Parts

No.	Description	Material	Model	Colour
1	**Body**	Zinc die-cast	AR10-A	White
		Aluminum die-cast	AR20-A to AR40-A	
2	**Bonnet**	Polyacetal	AR10-A to AR40-A	White

Replacement Parts

No.	Description	Material	Part no.					
			AR10-A	**AR20-A**	**AR25-A**	**AR30-A**	**AR40-A**	**AR40-06-A**
3	**Valve assembly**	Stainless steel, HNBR	AR10P-090S	AR22P-060AS		AR32P-060AS	AR42P-060AS	
4	**Diaphragm assembly**	Weatherable NBR	AR10P-150AS Note)	AR22P-150AS		AR32P-150AS	AR42P-150AS	
5	**Valve guide assembly**	Polyacetal	131329	AR22P-050AS		AR32P-050AS	AR42P-050AS	

Note) The AR10-A is a piston type. Assembly of a piston and a seal (KSYP-13).

Dimensions

AR10-A to AR40-06-A

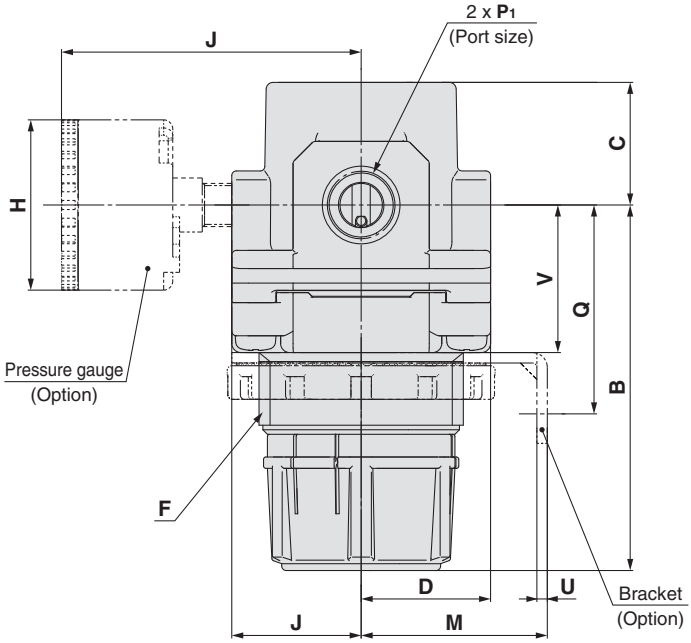

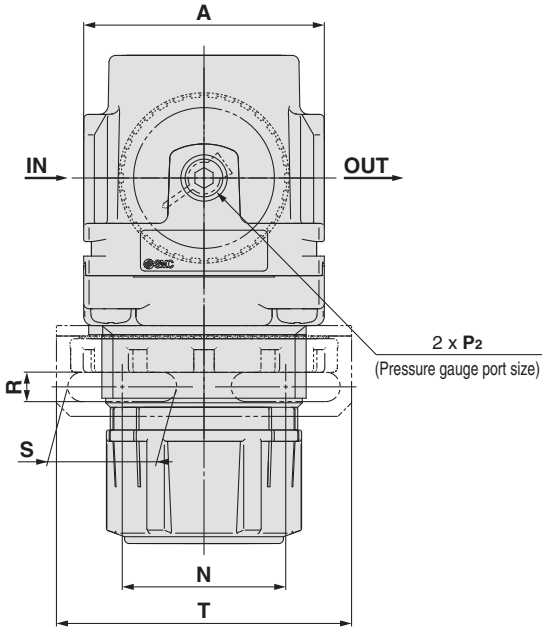

Panel fitting dimensions

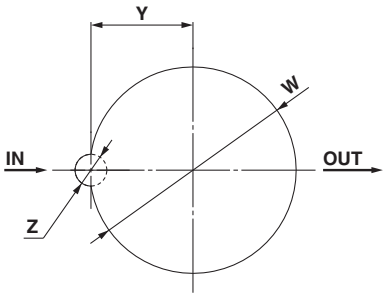

Plate thickness
AR10-A : Max. 3.5
AR20-A to AR25-A : Max. 4
AR30-A to AR40-06-A : Max. 8

Model	Standard specifications								Optional specifications														
									Round type pressure gauge		Round type pressure gauge (with colour zone)		Bracket mount							Panel mount			
	P_1	P_2	A	B Note)	C	D	F	J	H	J	H	J	M	N	Q	R	S	T	U	V	W	Y	Z
AR10-A	M5 x 0.8	1/16	25	47.4	11	12.5	M18 x 1	12.5	ø26	26	—	—	25	28	30	4.5	6.5	40	2	18	18.5	—	—
AR20-A	1/8, 1/4	1/8	40	67.4	23.5	22	M36 x 1.5	22	ø37.5	58.5	ø37.5	59.5	30	34	43.9	5.4	15.4	55	2.3	27.3	36.5	17.5	6
AR25-A	1/4, 3/8	1/8	53	70.4	23.5	22	M36 x 1.5	22	ø37.5	58.5	ø37.5	59.5	30	34	44.3	5.4	15.4	55	2.3	30.3	36.5	17.5	6
AR30-A	1/4, 3/8	1/8	53	83.5	27	28.5	M45 x 1.5	28.5	ø37.5	65	ø37.5	66	41	36	46	6.5	24	65	2.3	32.5	45.5	22.5	7
AR40-A	1/4, 3/8, 1/2	1/8	70	100	33.5	34.5	M52 x 1.5	34.5	ø42.5	72	ø42.5	72	50	38	54	8.5	26.5	70	2.3	38.4	52.5	26	7
AR40-06-A	3/4	1/8	75	101.5	33.5	34.5	M52 x 1.5	34.5	ø42.5	72	ø42.5	72	50	38	55.5	8.5	26.5	70	2.3	39.9	52.5	26	7

Note) The dimension of B is the length when the filter regulator knob is unlocked.

Regulator/*AR20-A to AR40-06-A*

Made to Order

Please contact SMC for detailed dimensions, specifications and lead times.

Made to Order

❶ 0.4 MPa Setting

The maximum set pressure is 0.4 MPa. When a pressure gauge is included, the display will show a range from 0 to 0.7 MPa.

Specifications

Proof pressure	1.5 MPa
Maximum operating pressure	1.0 MPa
Set pressure range	0.05 to 0.4 MPa

Applicable Model

Model	AR20-A	AR25-A	AR30-A	AR40-A	AR40-06-A
Port size	1/8, 1/4	1/4, 3/8	1/4, 3/8	1/4, 3/8, 1/2	3/4

AR 30 - ☐ 03 ☐ - ☐ - A - X406

❶ ❷ ❸ ❹ ❺ •0.4 MPa setting

• Option/Semi-standard: Select one each for **a** to **f**.
• Option/Semi-standard symbol: When more than one specification is required, indicate in alphanumeric order.
Example) AR30-03BG-NR-A-X406

				Symbol	Description	❶ Body size 20	25	30	40
❷	Pipe thread type				Rc	●	●	●	●
				N	NPT	●	●	●	●
				F	G	●	●	●	●
				+					
❸	Port size			**01**	1/8	●	—	—	—
				02	1/4	●	●	●	●
				03	3/8	—	●	●	●
				04	1/2	—	—	—	●
				06	3/4	—	—	—	●
				+					
❹	Option Note 1)	**a**	Mounting	—	Without mounting option	●	●	●	●
				B Note 2)	With bracket	●	●	●	●
				H	With set nut (for panel mount) Note 3)	●	●	●	●
				+					
		b	Pressure gauge	—	Without pressure gauge	●	●	●	●
				G	Round type pressure gauge (with limit indicator)	●	●	●	●
				M	Round type pressure gauge (with colour zone)	●	●	●	●
				+					
❺	Semi-standard	**c**	Exhaust mechanism	—	Relieving type	●	●	●	●
				N	Non-relieving type	●	●	●	●
				+					
		d	Flow direction	—	Flow direction: Left to right	●	●	●	●
				R	Flow direction: Right to left	●	●	●	●
				+					
		e	Knob	—	Downward	●	●	●	●
				Y	Upward	●	●	●	●
				+					
		f	Pressure unit	—	Name plate and caution plate for bowl in imperial units: MPa	●	●	●	●
				Z Note 4)	Name plate and caution plate for bowl in imperial units: psi	○ Note 5)	○ Note 5)	○ Note 5)	○ Note 5)

Note 1) Option B, G, H, M are not assembled and supplied loose at the time of shipment.
Note 2) Assembly of a bracket and set nuts
Note 3) Only for the AR20-A to 40-A
Note 4) For pipe thread type: NPT
Cannot be used with M: Round pressure gauge (with colour zone). Available by request for special.
Note 5) ○: For pipe thread type: NPT only

Made to Order

Please contact SMC for detailed dimensions, specifications and lead times.

Made to Order

❷ 0.85 MPa Setting

The maximum set pressure is 0.85 MPa. When a pressure gauge is included, the display will show a range from 0 to 1.0 MPa.

Specifications

Proof pressure	1.5 MPa
Maximum operating pressure	1.0 MPa
Set pressure range	0.05 to 0.85 MPa

Applicable Model

Model	AR20-A	AR25-A	AR30-A	AR40-A	AR40-06-A
Port size	1/8, 1/4	1/4, 3/8	1/4, 3/8	1/4, 3/8, 1/2	3/4

AR 30 - ☐ 03 ☐ - ☐ - A - X2068

❶ ❷ ❸ ❹ ❺ •0.85 MPa setting

• Option/Semi-standard: Select one each for **a** to **f**.
• Option/Semi-standard symbol: When more than one specification is required, indicate in alphanumeric order.
Example) AR30-03BG-NR-A-X2068

				Symbol	Description	❶ Body size 20	25	30	40
❷	Pipe thread type			—	Rc	●	●	●	●
				N	NPT	●	●	●	●
				F	G	●	●	●	●
				+					
❸	Port size			01	1/8	●	—	—	—
				02	1/4	●	●	●	●
				03	3/8	—	●	●	●
				04	1/2	—	—	—	●
				06	3/4	—	—	—	●
				+					
❹	Option Note 1)	a	Mounting	—	Without mounting option	●	●	●	●
				B Note 2)	With bracket	●	●	●	●
				H	With set nut (for panel mount) Note 3)	●	●	●	●
				+					
		b	Pressure gauge	—	Without pressure gauge	●	●	●	●
				G	Round type pressure gauge (with limit indicator)	●	●	●	●
				M	Round type pressure gauge (with colour zone)	●	●	●	●
				+					
❺	Semi-standard	c	Exhaust mechanism	—	Relieving type	●	●	●	●
				N	Non-relieving type	●	●	●	●
				+					
		d	Flow direction	—	Flow direction: Left to right	●	●	●	●
				R	Flow direction: Right to left	●	●	●	●
				+					
		e	Knob	—	Downward	●	●	●	●
				Y	Upward	●	●	●	●
				+					
		f	Pressure unit	—	Name plate and caution plate for bowl in imperial units: MPa	●	●	●	●
				Z Note 4)	Name plate and caution plate for bowl in imperial units: psi	○ Note 5)	○ Note 5)	○ Note 5)	○ Note 5)

Note 1) Option B, G, H, M are not assembled and supplied loose at the time of shipment.
Note 2) Assembly of a bracket and set nuts
Note 3) Only for the AR20-A to 40-A
Note 4) For pipe thread type: NPT
Cannot be used with M: Round pressure gauge (with colour zone). Available by request for special.
Note 5) ○: For pipe thread type: NPT only

Modular Type Lubricator

Series AL

Lubricator
Series AL

P.65 to 70

Model	Port size	Option
AL10-A	M5 x 0.8	Bracket (Except AL10-A)
AL20-A	1/8, 1/4	
AL30-A	1/4, 3/8	
AL40-A	1/4, 3/8, 1/2	
AL40-06-A	3/4	
AL50-A	3/4, 1	
AL60-A	1	

Lubricator

AL10-A to AL60-A

Symbol

AL10-A AL20-A AL40-A

How to Order

AL 30 – ❶ ❷ 03 ❸ B ❹ – ❺ – A

- Option/Semi-standard: Select one each for **a** to **d**.
- Option/Semi-standard symbol: When more than one specification is required, indicate in alphanumeric order.

Example) AL30-03B-3RW-A

		Symbol	Description	❶ Body size 10	20	30	40	50	60
❷	Pipe thread type	—	Metric thread (M5)	●	—	—	—	—	—
			Rc	—	●	●	●	●	●
		N	NPT	—	●	●	●	●	●
		F	G	—	●	●	●	●	●
		+							
❸	Port size	M5	M5 x 0.8	●	—	—	—	—	—
		01	1/8	—	●	—	—	—	—
		02	1/4	—	●	●	●	—	—
		03	3/8	—	—	●	●	—	—
		04	1/2	—	—	—	●	—	—
		06	3/4	—	—	—	●	●	—
		10	1	—	—	—	—	●	●
		+							
❹	Option (Mounting)	—	Without mounting option	●	●	●	●	●	●
		B Note 1)	With bracket	—	●	●	●	●	●
		+							
❺ Semi-standard	a Bowl Note 2)	—	Polycarbonate bowl	●	●	●	●	●	●
		2	Metal bowl	●	●	●	●	●	●
		6	Nylon bowl	●	●	●	●	●	●
		8	Metal bowl with level gauge	—	—	●	●	●	●
		C	With bowl guard	—	●	— Note 3)	— Note 3)	— Note 3)	— Note 3)
		6C	With bowl guard (Nylon bowl)	—	●	— Note 4)	— Note 4)	— Note 4)	— Note 4)
		+							
	b Lubricant exhaust port	—	Without drain cock	●	●	●	●	●	●
		3	With drain cock	●	●	—	—	—	—
		3W Note 5)	Drain cock with barb fitting	—	—	●	●	●	●
		+							
	c Flow direction	—	Flow direction: Left to right	●	●	●	●	●	●
		R	Flow direction: Right to left	●	●	●	●	●	●
		+							
	d Pressure unit	—	Name plate and caution plate: MPa	●	●	●	●	●	●
		Z Note 6)	Name plate and caution plate: psi, °F	○ Note 7)	○ Note 7)	○ Note 7)	○ Note 7)	○ Note 7)	○ Note 7)

Note 1) Option is not assembled and supplied loose at the time of shipment.
Note 2) Refer to Chemical data on page 68 for chemical resistance of the bowl.
Note 3) A bowl guard is provided as standard equipment (polycarbonate).
Note 4) A bowl guard is provided as standard equipment (nylon).
Note 5) The combination of metal bowl: 2 and 8 is not available.
Note 6) For pipe thread type: M5, NPT.
Note 7) ○: For pipe thread type: M5, NPT only

Standard Specifications

Model	AL10-A	AL20-A	AL30-A	AL40-A	AL40-06-A	AL50-A	AL60-A
Port size	M5 x 0.8	1/8, 1/4	1/4, 3/8	1/4, 3/8, 1/2	3/4	3/4, 1	1
Fluid	Air						
Ambient and fluid temperature	–5 to 60°C (with no freezing)						
Proof pressure	1.5 MPa						
Maximum operating pressure	1.0 MPa						
Minimum dripping flow rate [L/min (ANR)] Note)	4	15	1/4: 30 3/8: 40	1/4: 30 3/8: 40 1/2: 50	50	190	220
Oil capacity [cm³]	7	25	55	135			
Recommended lubricant	Class 1 turbine oil (ISO VG32)						
Bowl material	Polycarbonate						
Bowl guard	—	Semi-standard (Steel)	Standard (Polycarbonate)				
Weight [kg]	0.07	0.10	0.20	0.38	0.43	0.94	1.09

Note) · The flow rate is 5 drops or greater/min under the following conditions: Inlet pressure of 0.5 MPa; Class 1 turbine oil (ISO VG32); Temperature at 20°C; Oil adjustment valve fully open.
· For a circuit that repeatedly turns ON and OFF on the outlet side, make the adjustment so that the average air consumption per minute becomes the minimum dripping flow rate or more.

Option/Part No.

Optional specifications	Model						
	AL10-A	**AL20-A**	**AL30-A**	**AL40-A**	**AL40-06-A**	**AL50-A**	**AL60-A**
Bracket assembly Note)	—	AF22P-050AS	AF32P-050AS	AF42P-050AS	AF42P-070AS	AF52P-050AS	

Note) Assembly of a bracket and 2 mounting screws

Bowl Assembly/Part No.

Bowl material	Lubricant exhaust port	Other	Model						
			AL10-A	**AL20-A**	**AL30-A**	**AL40-A**	**AL40-06-A**	**AL50-A**	**AL60-A**
Polycarbonate bowl	Without drain cock	—	C1SL-A	C2SL-A	—	—			
		With bowl guard	—	C2SL-C-A	C3SL-A	C4SL-A			
	With drain cock	—	C1SL-3-A	C2SL-3-A	—	—			
		With bowl guard	—	C2SL-3C-A	C3SL-3-A	C4SL-3-A			
	Drain cock with barb fitting	With bowl guard	—	—	C3SL-3W-A	C4SL-3W-A			
Nylon bowl	Without drain cock	—	C1SL-6-A	C2SL-6-A	—	—			
		With bowl guard	—	C2SL-6C-A	C3SL-6-A	C4SL-6-A			
	With drain cock	—	C1SL-36-A	C2SL-36-A	—	—			
		With bowl guard	—	C2SL-36C-A	C3SL-36-A	C4SL-36-A			
	Drain cock with barb fitting	With bowl guard	—	—	C3SL-36W-A	C4SL-36W-A			
Metal bowl	Without drain cock	—	C1SL-2-A	C2SL-2-A	C3SL-2-A	C4SL-2-A			
		With level gauge	—	—	C3LL-8-A	C4LL-8-A			
	With drain cock	—	C1SL-23-A	C2SL-23-A	C3SL-23-A	C4SL-23-A			
		With level gauge	—	—	C3LL-38-A	C4LL-38-A			

Note) · Bowl assembly for the AL20-A to AL60-A models comes with a bowl seal.
· Please consult with SMC separately for psi and °F unit display specifications.

Flow-rate Characteristics (Representative values)

AL10-A M5

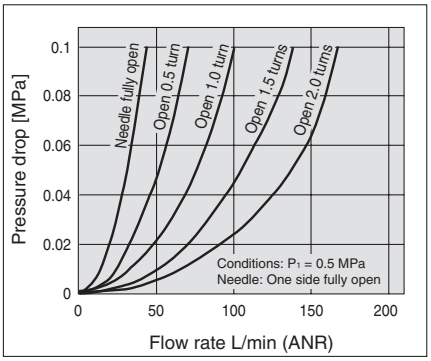

AL20-A Rc1/4

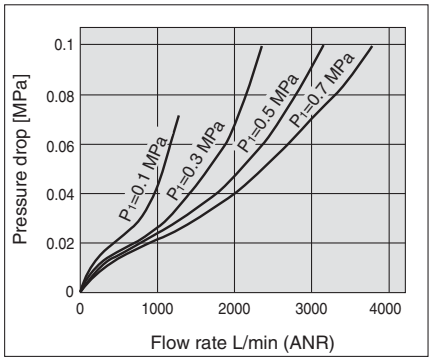

AL30-A Rc3/8

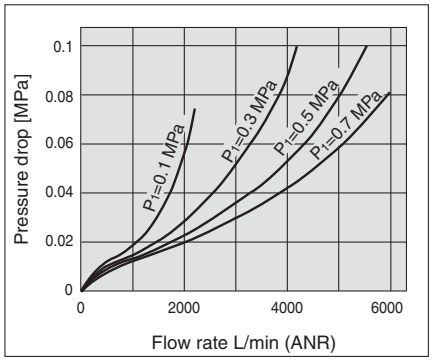

AL40-A Rc1/2

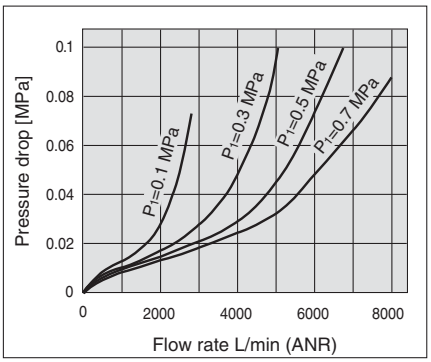

AL40-06-A Rc3/4

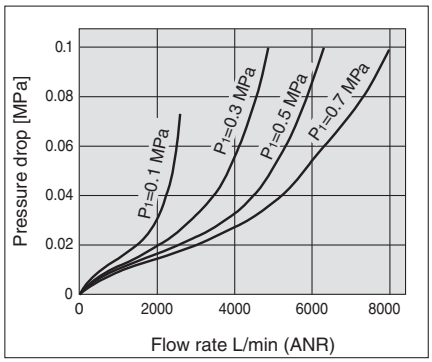

AL50-A Rc1

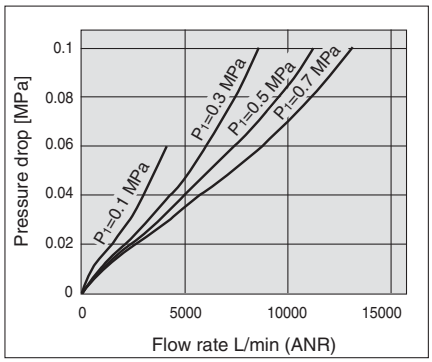

AL60-A Rc1

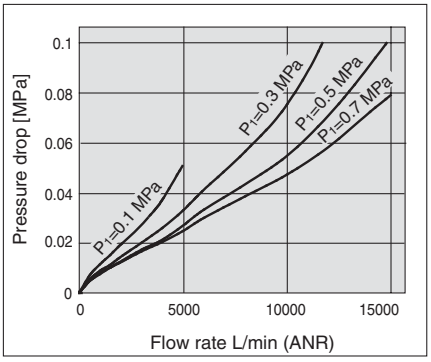

Working Principle: AL10 Type

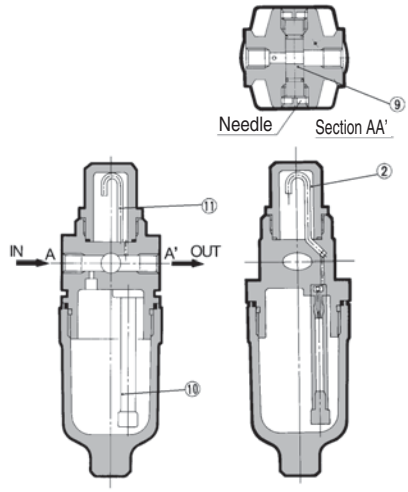

A portion of the air introduced from the IN side pressurizes the lubricant inside the bowl. The remainder of the air passes through the needle ⑨, and flows to the OUT side. The differential pressure between the inside of the bowl and the inside of the sight dome ②, causes the lubricant inside the bowl into the oil passage ⑩. The lubricant drips from the dripping tube ⑪, and lubricates the OUT side. The amount of lubricant is adjusted by the needle ⑨ on the front face. Turning the needle clockwise increases the amount of the lubricant, and turning it counterclockwise until fully open shuts off the lubricant. The needle on the side that is not used should be left fully open.

⚠ Specific Product Precautions

Be sure to read this before handling. Refer to the back cover for Safety Instructions, "Handling Precautions for SMC Products" and the Operation Manual for F.R.L. Precautions, http://www.smc.eu

Selection

⚠Warning

1. Do not introduce air from the outlet side as this can damage the bumper.
2. **The standard bowl for the air filter, filter regulator, and lubricator, as well as the sight dome for the lubricator are made of polycarbonate. Do not use in an environment where they are exposed to or come in contact with organic solvents, chemicals, cutting oil, synthetic oil, alkali, and thread lock solutions.**

Effects of atmosphere of organic solvents and chemicals, and where these elements are likely to adhere to the equipment.
Chemical data for substances causing degradation (Reference)

Type	Chemical name	Application examples	Material	
			Polycarbonate	Nylon
Acid	Hydrochloric acid Sulfuric acid, Phosphoric acid Chromic acid	Acid washing liquid for metals	△	×
Alkaline	Sodium hydroxide (Caustic soda) Potash Calcium hydroxide (Slack lime) Ammonia water Carbonate of soda	Degreasing of metals Industrial salts Water-soluble cutting oil	×	○
Inorganic salts	Sodium sulfide Sulfate of potash Sulfate of soda	—	×	△
Chlorine solvents	Carbon tetrachloride Chloroform Ethylene chloride Methylene chloride	Cleansing liquid for metals Printing ink Dilution	×	△
Aromatic series	Benzene Toluene Paint thinner	Coatings Dry cleaning	×	△
Ketone	Acetone Methyl ethyl ketone Cyclohexane	Photographic film Dry cleaning Textile industries	×	×
Alcohol	Ethyl alcohol IPA Methyl alcohol	Antifreeze Adhesives	△	×
Oil	Gasoline Kerosene	—	×	○
Ester	Phthalic acid dimethyl Phthalic acid diethyl Acetic acid	Synthetic oil Anti-rust additives	×	○
Ether	Methyl ether Ethyl ether	Brake oil additives	×	○
Amino	Methyl amino	Cutting oil Brake oil additives Rubber accelerator	×	×
Others	Thread-lock fluid Seawater Leak tester	—	×	△

○: Essentially safe △: Some effects may occur. ×: Effects will occur.

When the above factors are present, or there is some doubt, use a metal bowl for safety.

Selection

⚠Caution

1. Use a check valve (Series AKM) to prevent back flow of the lubricant when redirecting the air flow before the lubricator.

Maintenance

⚠Warning

1. For the AL10-A/AL20-A type, replenish the lubricant after releasing the inlet pressure. Lubrication cannot take place under a pressurized condition.
2. Adjustment of the oil regulating valve for models from the AL20-A to AL60-A should be carried out manually. Turning it counterclockwise increases the dripping amount, and turning it clockwise reduces the dripping amount. The use of tools etc. can result in damage to the unit. From the fully closed position, three rotations will bring it to the fully open position. Do not rotate it any further than this. Note that the numbered scale markings are guidelines for adjusting the position, and not indicators of the dripping amount.

⚠Caution

1. Check the dripping amount once a day. Drip failure can cause damage to the components that need lubrication.

Mounting/Adjustment

⚠Caution

1. When the bowl is installed on the AL30-A to AL60-A, install them so that the lock button lines up to the groove of the front (or the back) of the body to avoid drop or damage of the bowl.

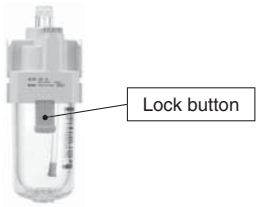

Construction

AL10-A

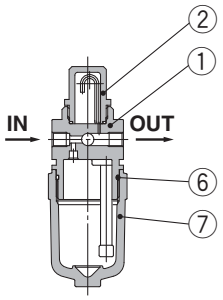

AL20-A

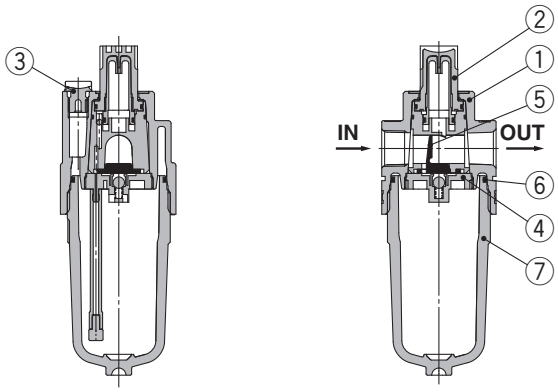

AL30-A/AL40-A

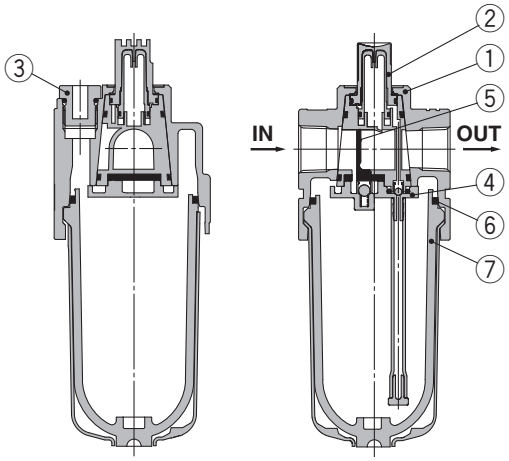

AL50-A/AL60-A

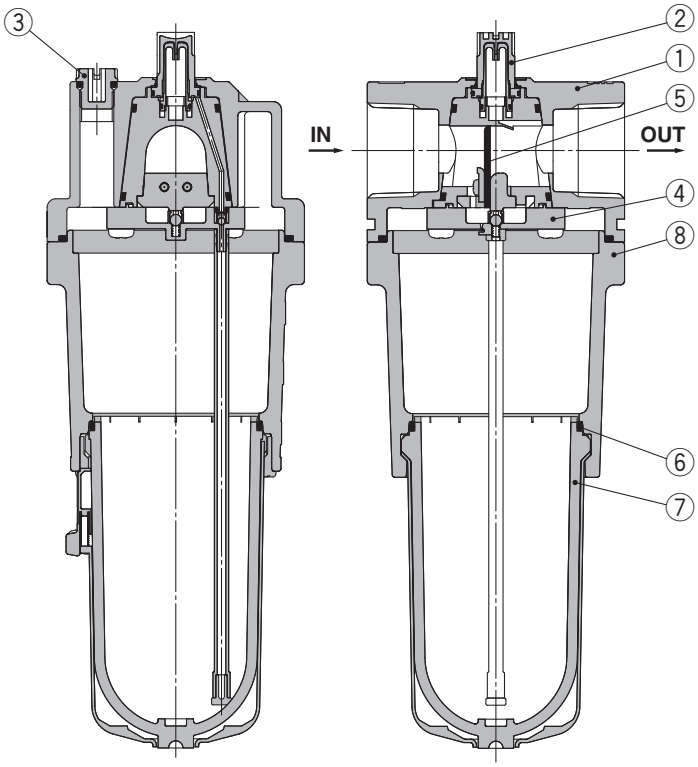

Component Parts

No.	Description	Material	Model	Colour
1	**Body**	Zinc die-cast	AL10-A	White
		Aluminum die-cast	AL20-A to AL60-A	
8	**Housing**	Aluminum die-cast	AL50-A/AL60-A	White

Replacement Parts

No.	Description	Material	Part no.						
			AL10-A	**AL20-A**	**AL30-A**	**AL40-A**	**AL40-06-A**	**AL50-A**	**AL60-A**
2	**Sight dome assembly**	Polycarbonate	AL10P-080AS	AL20P-080AS					
3	**Lubrication plug assembly**	—	—	AL22P-060AS	AL32P-060AS	AL42P-060AS			
4	**Bumper retainer assembly**	—	—	AL20P-030AS	AL30P-030AS	AL40P-030AS		AL50P-030AS	AL60P-030AS
5	**Bumper (assembly)**	Synthetic resin	—	AL20P-040S	AL30P-040S	AL40P-040S		AL50P-040AS	AL60P-040AS
6	**Bowl seal**	NBR	C1SFP-260S	C2SFP-260S	C32FP-260S	C42FP-260S			
7	**Bowl assembly** Note)	Polycarbonate	C1SL-A	C2SL-A	C3SL-A	C4SL-A			

Note) · Bowl seal is included for the AL20-A to AL60-A. Please consult with SMC separately for psi and °F unit display specifications.
· Bowl assembly for the AL30-A to AL60-A models comes with a bowl guard (Material: Polycarbonate).

Dimensions

AL10-A

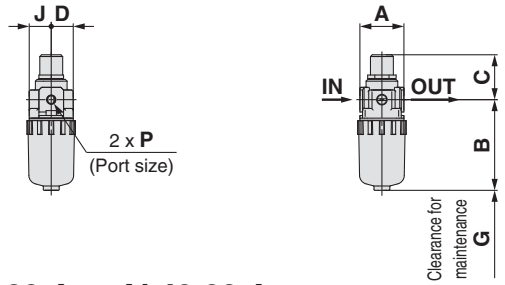

AL20-A

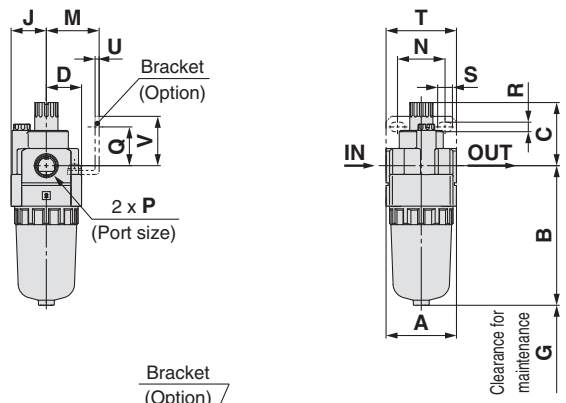

AL30-A to AL40-06-A

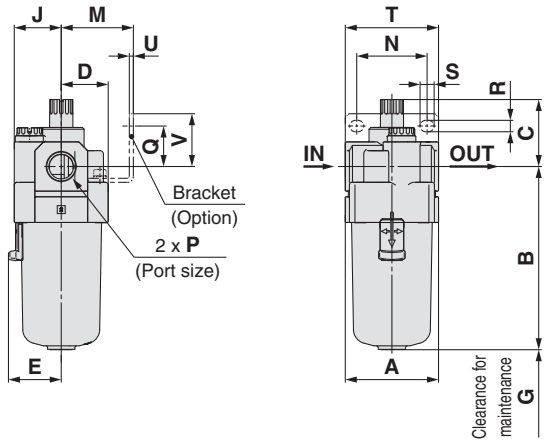

AL50-A
AL60-A

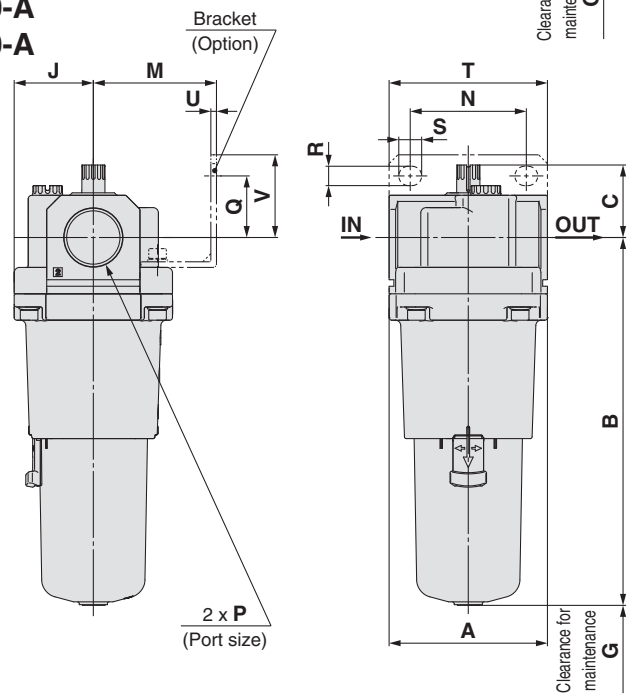

Applicable model	AL10-A/AL20-A			AL30-A to AL60-A
Optional/Semi-standard specifications	With drain cock	Metal bowl	Metal bowl with drain cock	Metal bowl
Dimensions	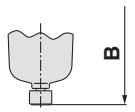	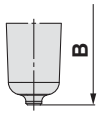	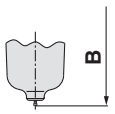	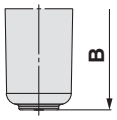

Applicable model	AL30-A to AL60-A				
Optional/Semi-standard specifications	With drain cock	Metal bowl with level gauge	Metal bowl with drain cock	Metal bowl with level gauge, with drain cock	Drain cock with barb fitting
Dimensions	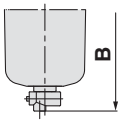	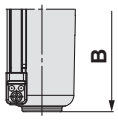	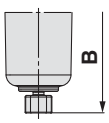	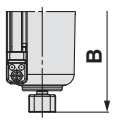	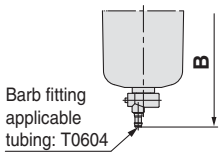 Barb fitting applicable tubing: T0604

Model	Standard specifications								Optional specifications								Semi-standard specifications					
									Bracket mount								With drain cock	With barb fitting	Metal bowl	Metal bowl with drain cock	Metal bowl with level gauge	Metal bowl with level gauge, with drain cock
	P	A	B	C	D	E	G	J	M	N	Q	R	S	T	U	V	B	B	B	B	B	B
AL10-A	M5 x 0.8	25	51.5	25.5	12.5	—	35	12.5	—	—	—	—	—	—	—	—	59.9	—	56.3	59.3	—	—
AL20-A	1/8, 1/4	40	79.3	35.9	20	—	60	20	30	27	22	5.4	8.4	40	2.3	28	87.7	—	84.5	87.5	—	—
AL30-A	1/4, 3/8	53	104.1	38.1	26.7	30	80	26.7	41	40	23	6.5	8	53	2.3	30	115.1	123.6	104.1	117.6	124.1	137.6
AL40-A	1/4, 3/8, 1/2	70	136.1	39.8	35.5	38.4	110	35.5	50	54	26	8.5	10.5	70	2.3	35	147.1	155.6	136.1	149.6	156.1	169.6
AL40-06-A	3/4	75	138.1	37.8	35.5	38.4	110	35.5	50	54	25	8.5	10.5	70	2.3	34	149.1	157.6	138.1	151.6	158.1	171.6
AL50-A	3/4, 1	90	209.1	41.2	45	—	110	45	70	66	35	11	13	90	3.2	47	220.1	228.6	209.1	222.6	229.1	246.2
AL60-A	1	95	223.1	44.7	47.5	—	110	47.5	70	66	35	11	13	90	3.2	47	234.1	242.6	223.1	236.6	243.1	256.6

Modular Type
Filter Regulator
Series AW

Filter Regulator
Series AW

P.73 to 84

Model	Port size	Options
AW10-A	M5 x 0.8	Bracket Float type auto drain Round type pressure gauge Set nut (for panel mount)*
AW20-A	1/8, 1/4	
AW30-A	1/4, 3/8	
AW40-A	1/4, 3/8, 1/2	
AW40-06-A	3/4	* For the AW20-A to AW40-06-A, mounting pitch is different from existing AW series.

Filter Regulator

AW10-A to AW40-A

Symbol
Filter Regulator

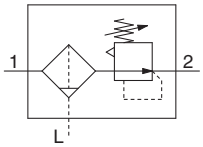

• Integrated filter and regulator units save space and require less piping.

How to Order

AW 30 – ☐ 03 BG – ☐ – A – ☐

❶ ❷ ❸ ❹ ❺

• Option/Semi-standard: Select one each for **a** to **i**.
• Option/Semi-standard symbol: When more than one specification is required, indicate in alphanumeric order.
Example) AW30-03BG-1N-A

• Made to Order
(Refer to pages 81 to 84 for details.)

			Symbol	Description	❶ Body size 10	20	30	40
❷	Pipe thread type		—	Metric thread (M5)	●	—	—	—
				Rc	—	●	●	●
			N Note 1)	NPT	—	●	●	●
			F Note 2)	G	—	●	●	●
			+					
❸	Port size		M5	M5	●	—	—	—
			01	1/8	—	●	—	—
			02	1/4	—	●	●	●
			03	3/8	—	—	●	●
			04	1/2	—	—	—	●
			06	3/4	—	—	—	●
			+					
❹ Option Note 3)	a	Mounting	—	Without mounting option	●	●	●	●
			B Note 4)	With bracket	●	●	●	●
			H	With set nut (for panel mount)	●	●	●	●
			+					
	b	Float type auto drain	—	Without auto drain	●	●	●	●
			C Note 5)	N.C. (Normally closed) Drain port is closed when pressure is not applied.	●	●	●	●
			D Note 6)	N.O. (Normally open) Drain port is open when pressure is not applied.	—	—	●	●
			+					
	c	Pressure gauge Note 7)	—	Without pressure gauge	●	●	●	●
			G	Round type pressure gauge (without limit indicator)	●	—	—	—
				Round type pressure gauge (with limit indicator)	—	●	●	●
			M	Round type pressure gauge (with colour zone)	—	●	●	●
			+					
❺ Semi-standard	d	Set pressure Note 8)	—	0.05 to 0.7 MPa setting	●	●	●	●
			1	0.02 to 0.2 MPa setting	●	●	●	●
			+					
	e	Bowl Note 9)	—	Polycarbonate bowl	●	●	●	●
			2	Metal bowl	●	●	●	●
			6	Nylon bowl	●	●	●	●
			8	Metal bowl with level gauge	—	—	●	●
			C	With bowl guard	—	●	— Note 10)	— Note 10)
			6C	With bowl guard (Nylon bowl)	—	●	— Note 11)	— Note 11)

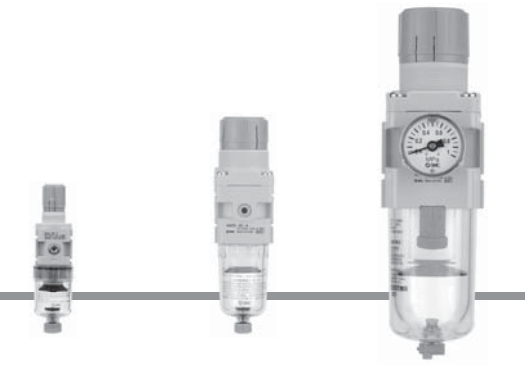

AW10-A **AW20-A** **AW40-A**

		Symbol	Description	❶ Body size 10	20	30	40
❺ Semi-standard	f Drain port Note 12)	—	With drain cock	●	●	●	●
		J Note 13)	Drain guide 1/8	—	●	—	—
			Drain guide 1/4	—	—	●	●
		W Note 14)	Drain cock with barb fitting (for ø6 x ø4 nylon tube)	—	—	●	●
		+					
	g Exhaust mechanism	—	Relieving type	●	●	●	●
		N	Non-relieving type	●	●	●	●
		+					
	h Flow direction	—	Flow direction: Left to right	●	●	●	●
		R	Flow direction: Right to left	●	●	●	●
		+					
	i Pressure unit	—	Name plate, caution plate for bowl, and pressure gauge in imperial units: MPa	●	●	●	●
		Z Note 15)	Name plate, caution plate for bowl, and pressure gauge in imperial units: psi, °F	○ Note 16)	○ Note 16)	○ Note 16)	○ Note 16)

Note 1) Drain guide is NPT1/8 (applicable to the AW20-A) and NPT1/4 (applicable to the AW30-A to AW40-A). The auto drain port comes with ø3/8" One-touch fitting (applicable to the AW30-A to AW40-A).
Note 2) Drain guide is G1/8 (applicable to the AW20-A) and G1/4 (applicable to the AW30-A to AW40-A).
Note 3) Option B, G, H, M are not assembled and supplied loose at the time of shipment.
Note 4) Assembly of a bracket and set nuts
Note 5) When pressure is not applied, condensate which does not start the auto drain mechanism will be left in the bowl. Releasing the residual condensate before ending operations for the day is recommended.
Note 6) If the compressor is small (0.75 kW, discharge flow is less than 100 L/min[ANR]), air leakage from the drain cock may occur during start of operations. N.C. type is recommended.
Note 7) When the pressure gauge is attached, a 1.0 MPa pressure gauge will be fitted for standard (0.7 MPa) type. 0.4 MPa pressure gauge for 0.2 MPa type (1.0 MPa pressure gauge only for the AW10-A).
Note 8) Pressure can be set higher than the specification pressure in some cases, but use pressure within the specification range.
Note 9) Refer to Chemical data on page 76 for chemical resistance of the bowl.
Note 10) A bowl guard is provided as standard equipment (polycarbonate).
Note 11) A bowl guard is provided as standard equipment (nylon).
Note 12) The combination of float type auto drain: C and D is not available.
Note 13) Without a valve function
Note 14) The combination of metal bowl: 2 and 8 is not available.
Note 15) For pipe thread type: NPT. Cannot be used with M: Round pressure gauge (with colour zone). Available by request for special.
Note 16) ○: For pipe thread type: M5, NPT only

Standard Specifications

Model	AW10-A	AW20-A	AW30-A	AW40-A	AW40-06-A
Port size	M5 x 0.8	1/8, 1/4	1/4, 3/8	1/4, 3/8, 1/2	3/4
Pressure gauge port size	1/16 Note)	1/8			
Fluid	Air				
Ambient and fluid temperature	–5 to 60°C (with no freezing)				
Proof pressure	1.5 MPa				
Maximum operating pressure	1.0 MPa				
Set pressure range	0.05 to 0.7 MPa				
Nominal filtration rating	5 μm				
Drain capacity (cm³)	2.5	8	25	45	
Bowl material	Polycarbonate				
Bowl guard	—	Semi-standard (Steel)	Standard (Polycarbonate)		
Construction	Relieving type				
Weight [kg]	0.09	0.21	0.41	0.75	0.81

Note) Use a bushing (part no: 131368) when connecting the R1/8 pressure gauge to the Rc1/16.

Options/Part No.

Optional specifications			Model				
			AW10-A	AW20-A	AW30-A	AW40-A	AW40-06-A
Bracket assembly Note 1)			AR12P-270AS	AR22P-270AS	AR32P-270AS	AR42P-270AS	
Set nut			AR12P-260S	AR22P-260S	AR32P-260S	AR42P-260S	
Pressure gauge Note 2)	Round type	Standard	G27-10-R1	G36-10-□01		G46-10-□01	
		0.02 to 0.2 MPa setting	G27-10-R1 Note 3)	G36-4-□01		G46-4-□01	
	Round type (with colour zone)	Standard	—	G36-10-□01-L		G46-10-□01-L	
		0.02 to 0.2 MPa setting	—	G36-4-□01-L		G46-4-□01-L	

Note 1) Assembly of a bracket and set nuts
Note 2) □ in round pressure gauge part numbers indicates a pipe thread type. No indication is necessary for R; however, indicate N for NPT.
Please contact SMC regarding the pipe thread type NPT and the supply of pressure gauge with psi unit display specifications.
Note 3) Standard pressure gauge

Bowl Assembly/Part No.

Bowl material	Drain discharge mechanism	Drain port	Other	Model				
				AW10-A	AW20-A	AW30-A	AW40-A	AW40-06-A
Polycarbonate bowl	Manual discharge	With drain cock	—	C1SF-A	C2SF-A	—	—	
			With bowl guard	—	C2SF-C-A	C3SF-A	C4SF-A	
		Drain cock with barb fitting	With bowl guard	—	—	C3SF-W-A	C4SF-W-A	
		With drain guide (without valve function)	—	—	C2SF□-J-A	—	—	
			With bowl guard	—	C2SF□-CJ-A	C3SF□-J-A	C4SF□-J-A	
	Automatic discharge Note) (Auto drain)	Normally closed (N.C.)	—	AD17-A	AD27-A	—	—	
			With bowl guard	—	AD27-C-A	AD37□-A	AD47□-A	
		Normally open (N.O.)	With bowl guard	—	—	AD38□-A	AD48□-A	
Nylon bowl	Manual discharge	With drain cock	—	C1SF-6-A	C2SF-6-A	—	—	
			With bowl guard	—	C2SF-6C-A	C3SF-6-A	C4SF-6-A	
		Drain cock with barb fitting	With bowl guard	—	—	C3SF-6W-A	C4SF-6W-A	
		With drain guide (without valve function)	—	—	C2SF□-6J-A	—	—	
			With bowl guard	—	C2SF□-6CJ-A	C3SF□-6J-A	C4SF□-6J-A	
	Automatic discharge Note) (Auto drain)	Normally closed (N.C.)	—	AD17-6-A	AD27-6-A	—	—	
			With bowl guard	—	AD27-6C-A	AD37□-6-A	AD47□-6-A	
		Normally open (N.O.)	With bowl guard	—	—	AD38□-6-A	AD48□-6-A	
Metal bowl	Manual discharge	With drain cock	—	C1SF-2-A	C2SF-2-A	C3SF-2-A	C4SF-2-A	
			With level gauge	—	—	C3LF-8-A	C4LF-8-A	
		With drain guide (without valve function)	—	—	C2SF□-2J-A	C3SF□-2J-A	C4SF□-2J-A	
			With level gauge	—	—	C3LF□-8J-A	C4LF□-8J-A	
	Automatic discharge Note) (Auto drain)	Normally closed (N.C.)	—	AD17-2-A	AD27-2-A	AD37□-2-A	AD47□-2-A	
			With level gauge	—	—	AD37□-8-A	AD47□-8-A	
		Normally open (N.O.)	—	—	—	AD38□-2-A	AD48□-2-A	
			With level gauge	—	—	AD38□-8-A	AD48□-8-A	

Note) Minimum operating pressure: N.O. type–0.1 MPa (AD38-A, AD48-A); N.C. type–0.1 MPa (AD17-A, AD27-A) and 0.15 MPa (AD37-A, AD47-A).
Bowl assembly for the AW10-A to AW40-06-A models comes with a bowl seal.
□ in bowl assembly part numbers indicates a pipe thread type (applicable tubing for auto drain).
No indication is necessary for Rc thread; however, indicate N for NPT thread, and F for G thread. (For auto drain, —: ø10, N: ø3/8")
Please consult with SMC separately for psi and °F unit display specifications.

⚠ Specific Product Precautions

Be sure to read this before handling. Refer to the back cover for Safety Instructions, "Handling Precautions for SMC Products" and the Operation Manual for F.R.L. Precautions, http://www.smc.eu

Design/Selection

⚠ Warning

1. Although exhaust of the residual pressure to the inlet side is possible when eliminating the inlet pressure, exhaust is not possible when the set pressure is 0.15 MPa or less. Use the regulator with backflow function.
2. **The standard bowl for the air filter, filter regulator, and lubricator, as well as the sight dome for the lubricator are made of polycarbonate. Do not use in an environment where they are exposed to or come in contact with organic solvents, chemicals, cutting oil, synthetic oil, alkali, and thread lock solutions.**

Effects of atmosphere of organic solvents and chemicals, and where these elements are likely to adhere to the equipment.
Chemical data for substances causing degradation (Reference)

Type	Chemical name	Application examples	Material	
			Polycarbonate	Nylon
Acid	Hydrochloric acid Sulfuric acid, Phosphoric acid Chromic acid	Acid washing liquid for metals	△	×
Alkaline	Sodium hydroxide (Caustic soda) Potash Calcium hydroxide (Slack lime) Ammonia water Carbonate of soda	Degreasing of metals Industrial salts Water-soluble cutting oil	×	○
Inorganic salts	Sodium sulfide Sulfate of potash Sulfate of soda	—	×	△
Chlorine solvents	Carbon tetrachloride Chloroform Ethylene chloride Methylene chloride	Cleansing liquid for metals Printing ink Dilution	×	△
Aromatic series	Benzene Toluene Paint thinner	Coatings Dry cleaning	×	△
Ketone	Acetone Methyl ethyl ketone Cyclohexane	Photographic film Dry cleaning Textile industries	×	×
Alcohol	Ethyl alcohol IPA Methyl alcohol	Antifreeze Adhesives	△	×
Oil	Gasoline Kerosene	—	×	○
Ester	Phthalic acid dimethyl Phthalic acid diethyl Acetic acid	Synthetic oil Anti-rust additives	×	○
Ether	Methyl ether Ethyl ether	Brake oil additives	×	○
Amino	Methyl amino	Cutting oil Brake oil additives Rubber accelerator	×	×
Others	Thread-lock fluid Seawater Leak tester	—	×	△

○: Essentially safe △: Some effects may occur. ×: Effects will occur.

When the above factors are present, or there is some doubt, use a metal bowl for safety.

Maintenance

⚠ Warning

1. Replace the element every 2 years or when the pressure drop becomes 0.1 MPa, whichever comes first, to prevent damage to the element.

Mounting/Adjustment

⚠ Warning

1. Set the regulator while verifying the displayed values of the inlet and outlet pressure gauges. Turning the regulator knob excessively can cause damage to the internal parts.
2. Do not use tools on the pressure regulator knob as this may cause damage. It must be operated manually.

⚠ Caution

1. Be sure to unlock the knob before adjusting the pressure and lock it after setting the pressure. Failure to follow this procedure can cause damage to the knob and the outlet pressure may fluctuate.
   - Pull the pressure regulator knob to unlock. (You can visually verify this with the "orange mark" that appears in the gap.)
   - Push the pressure regulator knob to lock. When the knob is not easily locked, turn it left and right a little and then push it (when the knob is locked, the "orange mark", i.e., the gap will disappear).

2. Pulsation will be generated when the difference between the inlet and the outlet pressure is large. In this case, reduce the pressure difference between the inlet and the outlet. Please consult with SMC if the pulsation problem is not resolved.
3. When the bowl is installed on the AW30-A/AW40-A, install them so that the lock button lines up to the groove of the front (or the back) of the body to avoid drop or damage of the bowl.

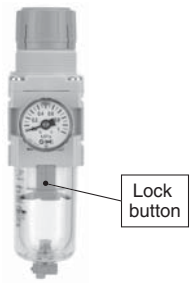

Flow-rate Characteristics (Representative values)

Condition: Inlet pressure 0.7 MPa

AW10-A

M5

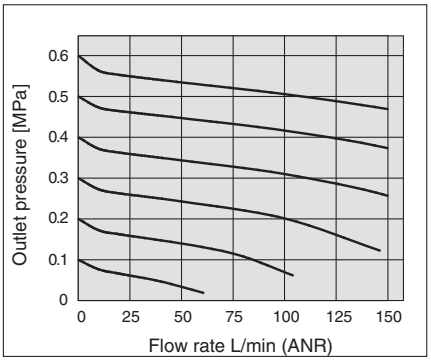

AW20-A

Rc1/4

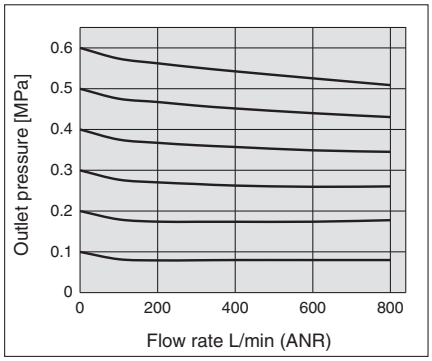

AW30-A

Rc3/8

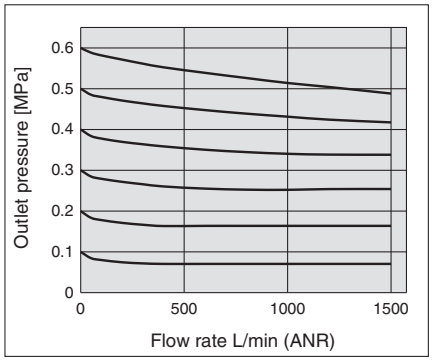

AW40-A

Rc1/2

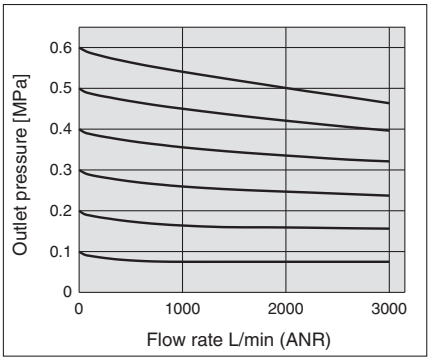

AW40-06-A

Rc3/4

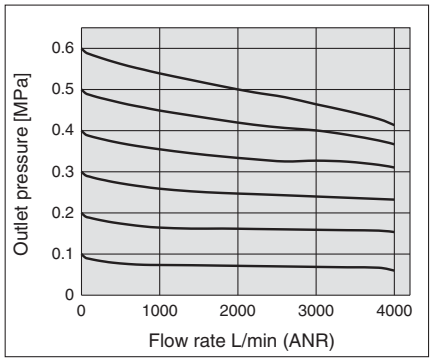

Pressure Characteristics (Representative values)

Conditions: Inlet pressure 0.7 MPa, Outlet pressure 0.2 MPa, Flow rate 20 L/min (ANR)

AW10-A

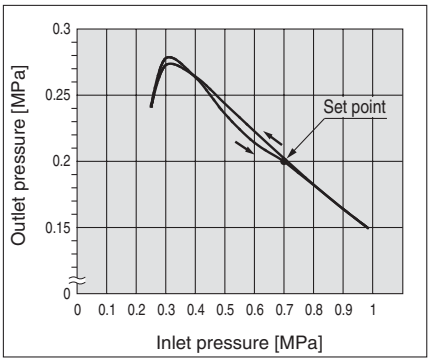

AW20-A

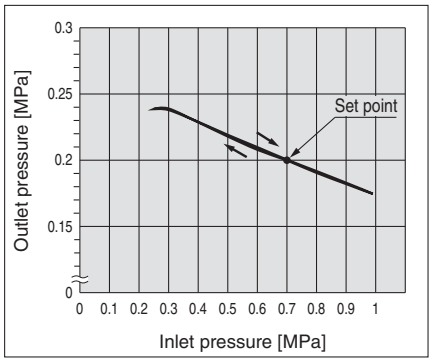

AW30-A

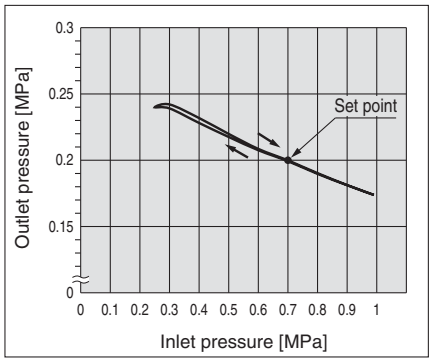

AW40-A/AW40-06-A

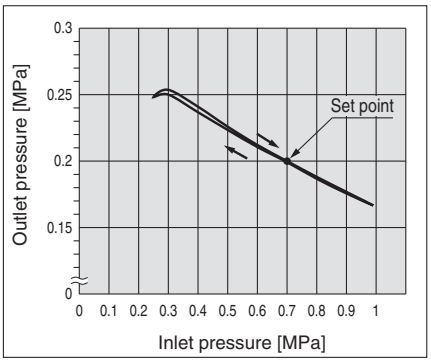

Construction

AW10-A

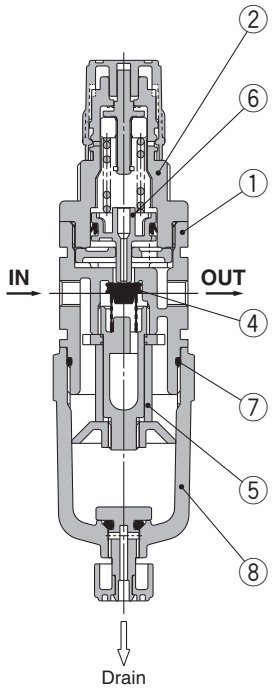

AW20-A

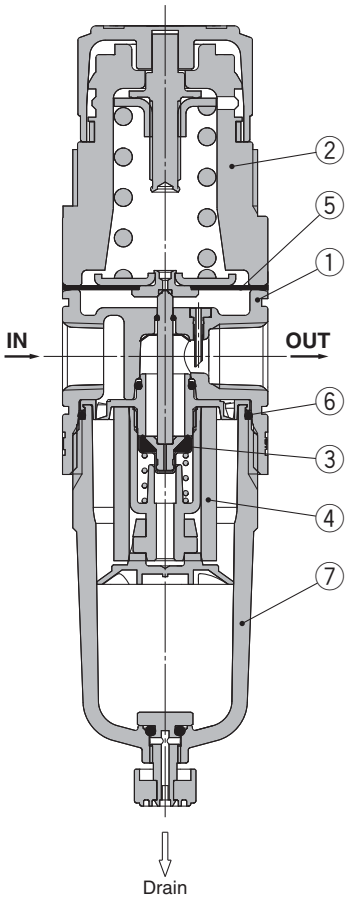

AW30-A to AW40-06-A

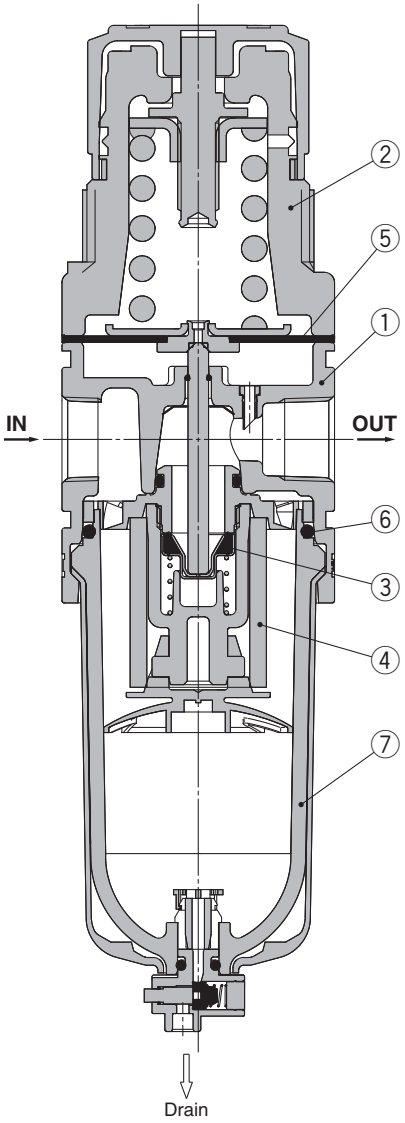

Component Parts

No.	Description	Material	Model	Colour
1	**Body**	Zinc die-cast	AW10-A	White
		Aluminum die-cast	AW20-A to AW40-06-A	
2	**Bonnet**	Polyacetal	AW10-A to AW40-06-A	White

Replacement Parts

No.	Description	Material	Part no.				
			AW10-A	**AW20-A**	**AW30-A**	**AW40-A**	**AW40-06-A**
3	**Valve assembly**	Stainless steel, HNBR	AR10P-090S	AW22P-060AS	AW32P-060AS	AW42P-060AS	
4	**Filter element**	Non-woven fabric	AF10P-060S	AF20P-060S	AF30P-060S	AF40P-060S	
5	**Diaphragm assembly**	Weatherable NBR	AR10P-150AS Note 1)	AR22P-150AS	AR32P-150AS	AR42P-150AS	
6	**Bowl seal**	NBR	C1SFP-260S	C2SFP-260S	C32FP-260S	C42FP-260S	
7	**Bowl assembly** Note 2)	Polycarbonate	C1SF-A	C2SF-A	C3SF-A	C4SF-A	

Note 1) The AW10-A is a piston type. Assembly of a piston and a seal (KSYP-13).
Note 2) Bowl seal is included for the AW20-A to AW40-06-A. Please contact SMC regarding the supply of bowl assembly with psi and °F unit display specifications.

Dimensions

AW10-A

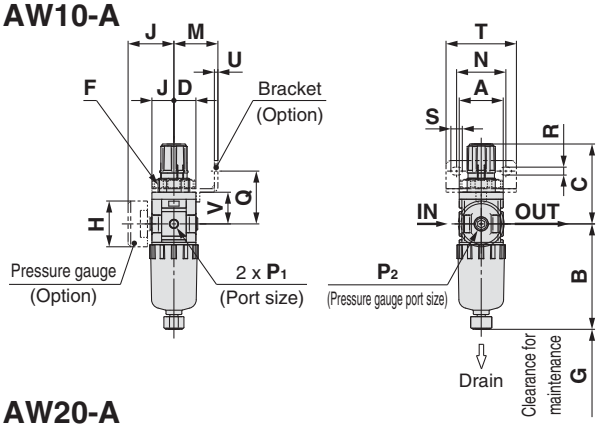

AW20-A

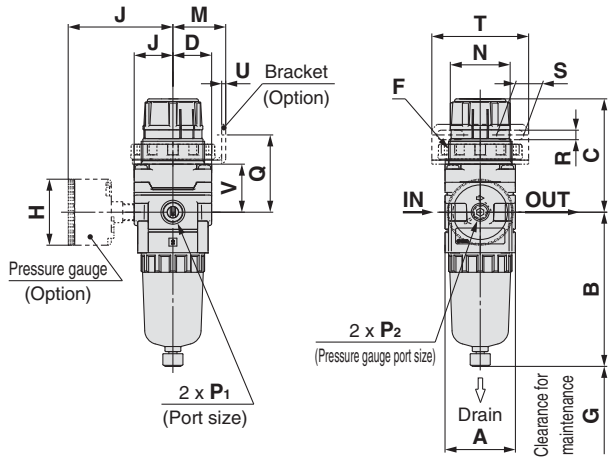

AW30-A to AW40-06-A

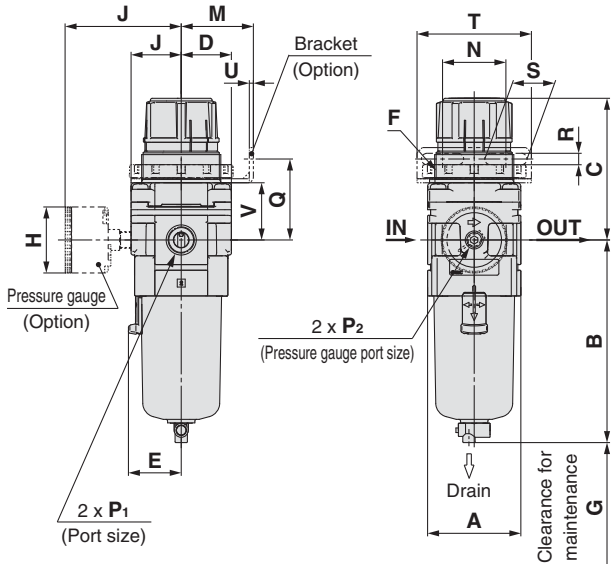

Panel fitting dimensions

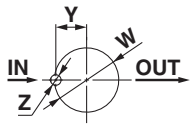

Plate thickness
AW10-A: Max. 3.5
AW20-A: Max. 4

Panel fitting dimensions

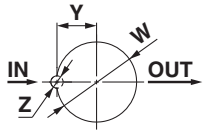

Plate thickness
AW30-A to AW40-06-A: Max. 8

Applicable model	AW10-A/AW20-A		AW20-A		AW30-A to AW40-06-A
Optional/Semi-standard specifications	With auto drain (N.C.)	Metal bowl	With drain guide	Metal bowl with drain guide	With auto drain (N.O./N.C.)
Dimensions	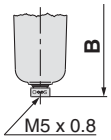	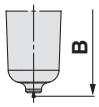	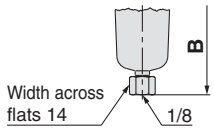	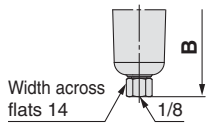	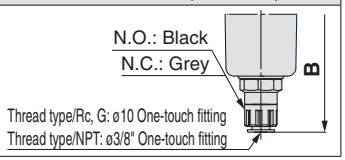

Applicable model	AW30-A to AW40-06-A					
Optional/Semi-standard specifications	Metal bowl	Metal bowl with drain guide	Metal bowl with level gauge	Metal bowl with level gauge, with drain guide	With drain guide	Drain cock with barb fitting
Dimensions	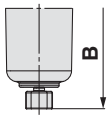	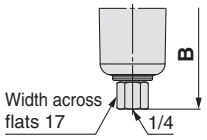	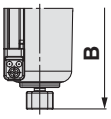	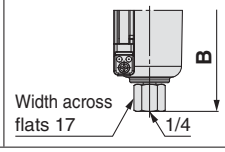	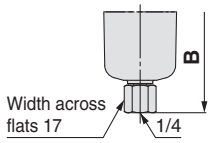	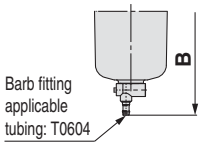

Model	Standard specifications										Optional specifications			
											Round type pressure gauge		Round type pressure gauge (with colour zone)	
	P_1	P_2	A	B	C Note)	D	E	F	G	J	H	J	H	J
AW10-A	M5 x 0.8	1/16	25	59.9	47.4	12.5	—	M18 x 1	25	12.5	ø26	26	—	—
AW20-A	1/8, 1/4	1/8	40	87.6	67.4	22	—	M36 x 1.5	25	22	ø37.5	58.5	ø37.5	59.5
AW30-A	1/4, 3/8	1/8	53	115.1	83.5	28.5	30	M45 x 1.5	35	28.5	ø37.5	65	ø37.5	66
AW40-A	1/4, 3/8, 1/2	1/8	70	147.1	100	34.5	38.4	M52 x 1.5	40	34.5	ø42.5	72	ø42.5	72
AW40-06-A	3/4	1/8	75	149.1	101.5	34.5	38.4	M52 x 1.5	40	34.5	ø42.5	72	ø42.5	72

Model	Optional specifications												Semi-standard specifications					
	Bracket mount							Panel mount				With auto drain	With barb fitting	With drain guide	Metal bowl	Metal bowl with drain guide	Metal bowl with level gauge	Metal bowl with level gauge, with drain guide
	M	N	Q	R	S	T	U	V	W	Y	Z	B	B	B	B	B	B	B
AW10-A	25	28	30	4.5	6.5	40	2	18	18.5	—	—	77.9	—	—	59.3	—	—	—
AW20-A	30	34	43.9	5.4	15.4	55	2.3	27.3	36.5	17.5	6	104.9	—	91.4	87.4	93.9	—	—
AW30-A	41	36	46	6.5	24	65	2.3	32.5	45.5	22.5	7	156.8	123.6	121.9	117.6	122.1	137.6	142.1
AW40-A	50	38	54	8.5	26.5	70	2.3	38.4	52.5	26	7	186.9	155.6	153.9	149.6	154.1	169.6	174.1
AW40-06-A	50	38	55.5	8.5	26.5	70	2.3	39.9	52.5	26	7	188.9	157.6	155.9	151.6	156.1	171.6	176.1

Note) The dimension of C is the length when the filter regulator knob is unlocked.

Filter Regulator/*AW20-A to AW40-06-A*

Made to Order

Please contact SMC for detailed dimensions, specifications and lead times.

Made to Order

❶ 0.4 MPa Setting

The maximum set pressure is 0.4 MPa. When a pressure gauge is included, the display will show a range from 0 to 0.7 MPa.

Specifications

Proof pressure	1.5 MPa
Maximum operating pressure	1.0 MPa
Set pressure range	0.05 to 0.4 MPa

Applicable Model

Model	AW20-A	AW30-A	AW40-A	AW40-06-A
Port size	1/8, 1/4	1/4, 3/8	1/4, 3/8, 1/2	3/4

❷ Long Bowl

Drain capacity is greater than that of standard models.

Applicable Model/Drain Capacity

Model	AW20-A	AW30-A	AW40-A	AW40-06-A
Port size	1/8, 1/4	1/4, 3/8	1/4, 3/8, 1/2	3/4
Drain capacity (cm^3)	19	43	88	

Note) Please consult with SMC for dimensions.

How to Order

AW 30 – ❶ ❷ 03 ❸ ❹ – ❺ – A – X406

X406	0.4 MPa setting
X64	Long bowl

• Option/Semi-standard: Select one each for **a** to **i**.
• Option/Semi-standard symbol: When more than one specification is required, indicate in alphanumeric order.
Example) AW30-03BG-2N-A-X406

			Symbol	Description	0.4 MPa Setting ❶ Body size 20	30	40	Long Bowl ❶ Body size 20	30	40
❷	Pipe thread type		—	Rc	●	●	●	●	●	●
			N Note 1)	NPT	●	●	●	●	●	●
			F Note 2)	G	●	●	●	●	●	●
			+							
❸	Port size		**01**	1/8	●	—	—	●	—	—
			02	1/4	●	●	●	●	●	●
			03	3/8	—	●	●	—	●	●
			04	1/2	—	—	●	—	—	●
			06	3/4	—	—	●	—	—	●
			+							
❹	Option Note 3)	**a** Mounting	—	Without mounting option	●	●	●	●	●	●
			B Note 4)	With bracket	●	●	●	●	●	●
			H	With set nut (for panel mount)	●	●	●	●	●	●
			+							
		b Float type auto drain	—	Without auto drain	●	●	●	—	—	—
			C Note 5)	Float type auto drain (N.C.)	●	●	●	—	—	—
			D Note 6)	Float type auto drain (N.O.)	—	●	●	—	—	—
			+							
		c Pressure gauge	—	Without pressure gauge	●	●	●	●	●	●
			G	Round type pressure gauge (with limit indicator)	●	●	●	● Note 7)	● Note 7)	● Note 7)
			M	Round type pressure gauge (with colour zone)	●	●	●	● Note 7)	● Note 7)	● Note 7)

Note 1) Drain guide is NPT1/8 (applicable to the AW20-A) and NPT1/4 (applicable to the AW30-A to AW40-A).
The auto drain port comes with ø3/8" One-touch fitting (applicable to the AW30-A to AW40-A).
Note 2) Drain guide is G1/8 (applicable to the AW20-A) and G1/4 (applicable to the AW30-A to AW40-A).
Note 3) Option B, G, H, M are not assembled and supplied loose at the time of shipment.
Note 4) Assembly of a bracket and set nuts
Note 5) When pressure is not applied, condensate which does not start the auto drain mechanism will be left in the bowl.
Releasing the residual condensate before ending operations for the day is recommended.
Note 6) If the compressor is small (0.75 kW, discharge flow is less than 100 L/min[ANR]), air leakage from the drain cock may occur during start of operations.
N.C. type is recommended.
Note 7) When the pressure gauge is attached, a 1.0 MPa pressure gauge will be fitted for standard (0.7 MPa) type. 0.4 MPa pressure gauge for 0.2 MPa type.

			Symbol	Description	0.4 MPa Setting			Long Bowl		
					❶ Body size			❶ Body size		
					20	30	40	20	30	40
❺	Semi-standard	d Set pressure Note 8)	—	0.05 to 0.7 MPa setting	—	—	—	●	●	●
			1	0.02 to 0.2 MPa setting	—	—	—	●	●	●
		+								
		e Bowl Note 9)	—	Polycarbonate bowl	●	●	●	●	●	●
			2	Metal bowl	●	●	●	●	●	●
			6	Nylon bowl	●	●	●	●	●	●
			8	Metal bowl with level gauge	—	●	●	—	—	—
			C	With bowl guard	●	—	—	●	— Note 11)	— Note 11)
			6C	With bowl guard (Nylon bowl)	●	—	—	●	— Note 12)	— Note 12)
		+								
		f Drain port Note 10)	—	With drain cock	●	●	●	●	●	●
			J Note 13)	Drain guide 1/8	●	—	—	●	—	—
				Drain guide 1/4	—	●	●	—	●	●
			W Note 14)	Drain cock with barb fitting (for ø6 x ø4 nylon tube)	—	●	●	—	●	●
		+								
		g Exhaust mechanism	—	Relieving type	●	●	●	●	●	●
			N	Non-relieving type	●	●	●	●	●	●
		+								
		h Flow direction	—	Flow direction: Left to right	●	●	●	●	●	●
			R	Flow direction: Right to left	●	●	●	●	●	●
		+								
		i Pressure unit	—	Name plate and caution plate for bowl in imperial units: MPa	●	●	●	●	●	●
			Z Note 15)	Name plate and caution plate for bowl in imperial units: psi, °F	○ Note 16)	○ Note 16)	○ Note 16)	○ Note 16)	○ Note 16)	○ Note 16)

Note 8) Pressure can be set higher than the specification pressure in some cases, but use pressure within the specification range.
Note 9) Refer to Chemical data on page 76 for chemical resistance of the bowl.
Note 10) The combination of float type auto drain: C and D is not available.
Note 11) A bowl guard is provided as standard equipment (polycarbonate).
Note 12) A bowl guard is provided as standard equipment (nylon).
Note 13) Without a valve function
Note 14) The combination of metal bowl: 2 and 8 is not available.
Note 15) For pipe thread type: NPT.
Cannot be used with M: Round pressure gauge (with colour zone). Available by request for special.
Note 16) ○: For pipe thread type: NPT only

Made to Order

Please contact SMC for detailed dimensions, specifications and lead times.

Made to Order

❸ 0.85 MPa Setting

The maximum set pressure is 0.85 MPa. When a pressure gauge is included, the display will show a range from 0 to 1.0 MPa.

Specifications

Proof pressure	1.5 MPa
Maximum operating pressure	1.0 MPa
Set pressure range	0.05 to 0.85 MPa

Applicable Model

Model	AW20-A	AW30-A	AW40-A	AW40-06-A
Port size	1/8, 1/4	1/4, 3/8	1/4, 3/8, 1/2	3/4

How to Order

AW 30 – ☐ 03 ☐ – ☐ – A – X2068

❶ ❷ ❸ ❹ ❺

X2068	0.85 MPa setting

• Option/Semi-standard: Select one each for **a** to **i**.
• Option/Semi-standard symbol: When more than one specification is required, indicate in alphanumeric order.
Example) AW30-03BG-2N-A-X2068

0.85 MPa Setting

			Symbol	Description	❶ Body size 20	30	40
❷	Pipe thread type		—	Rc	●	●	●
			N Note 1)	NPT	●	●	●
			F Note 2)	G	●	●	●
			+				
❸	Port size		**01**	1/8	●	—	—
			02	1/4	●	●	●
			03	3/8	—	●	●
			04	1/2	—	—	●
			06	3/4	—	—	●
			+				
❹	Option Note 3)	**a** Mounting	—	Without mounting option	●	●	●
			B Note 4)	With bracket	●	●	●
			H	With set nut (for panel mount)	●	●	●
			+				
		b Float type auto drain	—	Without auto drain	●	●	●
			C Note 5)	Float type auto drain (N.C.)	●	●	●
			D Note 6)	Float type auto drain (N.O.)	—	●	●
			+				
		c Pressure gauge	—	Without pressure gauge	●	●	●
			G	Round type pressure gauge (with limit indicator)	●	●	●
			M	Round type pressure gauge (with colour zone)	●	●	●

Note 1) Drain guide is NPT1/8 (applicable to the AW20-A) and NPT1/4 (applicable to the AW30-A to AW40-A).
The auto drain port comes with ø3/8" One-touch fitting (applicable to the AW30-A to AW40-A).
Note 2) Drain guide is G1/8 (applicable to the AW20-A) and G1/4 (applicable to the AW30-A to AW40-A).
Note 3) Option B, G, H, M are not assembled and supplied loose at the time of shipment.
Note 4) Assembly of a bracket and set nuts
Note 5) When pressure is not applied, condensate which does not start the auto drain mechanism will be left in the bowl.
Releasing the residual condensate before ending operations for the day is recommended.
Note 6) If the compressor is small (0.75 kW, discharge flow is less than 100 L/min[ANR]), air leakage from the drain cock may occur during start of operations.
N.C. type is recommended.

0.85 MPa Setting

			Symbol	Description	❶ Body size 20	30	40
❺	Semi-standard	d	Bowl Note 7)	—	Polycarbonate bowl	●	●	●
				2	Metal bowl	●	●	●
				6	Nylon bowl	●	●	●
				8	Metal bowl with level gauge	—	●	●
				C	With bowl guard	●	—	—
				6C	With bowl guard (Nylon bowl)	●	—	—
				+				
		e	Drain port Note 8)	—	With drain cock	●	●	●
				J Note 9)	Drain guide 1/8	●	—	—
					Drain guide 1/4	—	●	●
				W Note 10)	Drain cock with barb fitting (for ø6 x ø4 nylon tube)	—	●	●
				+				
		f	Exhaust mechanism	—	Relieving type	●	●	●
				N	Non-relieving type	●	●	●
				+				
		g	Flow direction	—	Flow direction: Left to right	●	●	●
				R	Flow direction: Right to left	●	●	●
				+				
		h	Pressure unit	—	Name plate and caution plate for bowl in imperial units: MPa	●	●	●
				Z Note 11)	Name plate and caution plate for bowl in imperial units: psi, °F	○ Note 12)	○ Note 12)	○ Note 12)

Note 7) Refer to Chemical data on page 76 for chemical resistance of the bowl.
Note 8) The combination of float type auto drain: C and D is not available.
Note 9) Without a valve function
Note 10) The combination of metal bowl: 2 and 8 is not available.
Note 11) For pipe thread type: NPT.
Cannot be used with M: Round pressure gauge (with colour zone). Available by request for special.
Note 12) ○: For pipe thread type: NPT only

SMC

⚠ Safety Instructions

These safety instructions are intended to prevent hazardous situations and/or equipment damage. These instructions indicate the level of potential hazard with the labels of **"Caution," "Warning"** or **"Danger."** They are all important notes for safety and must be followed in addition to International Standards (ISO/IEC)*1), and other safety regulations.

⚠ Caution: **Caution** indicates a hazard with a low level of risk which, if not avoided, could result in minor or moderate injury.

⚠ Warning: **Warning** indicates a hazard with a medium level of risk which, if not avoided, could result in death or serious injury.

⚠ Danger : **Danger** indicates a hazard with a high level of risk which, if not avoided, will result in death or serious injury.

*1) ISO 4414: Pneumatic fluid power – General rules relating to systems.
ISO 4413: Hydraulic fluid power – General rules relating to systems.
IEC 60204-1: Safety of machinery – Electrical equipment of machines. (Part 1: General requirements)
ISO 10218-1: Manipulating industrial robots - Safety.
etc.

⚠ Warning

1. **The compatibility of the product is the responsibility of the person who designs the equipment or decides its specifications.**
   Since the product specified here is used under various operating conditions, its compatibility with specific equipment must be decided by the person who designs the equipment or decides its specifications based on necessary analysis and test results. The expected performance and safety assurance of the equipment will be the responsibility of the person who has determined its compatibility with the product. This person should also continuously review all specifications of the product referring to its latest catalogue information, with a view to giving due consideration to any possibility of equipment failure when configuring the equipment.
2. **Only personnel with appropriate training should operate machinery and equipment.**
   The product specified here may become unsafe if handled incorrectly. The assembly, operation and maintenance of machines or equipment including our products must be performed by an operator who is appropriately trained and experienced.
3. **Do not service or attempt to remove product and machinery/equipment until safety is confirmed.**
   1. The inspection and maintenance of machinery/equipment should only be performed after measures to prevent falling or runaway of the driven objects have been confirmed.
   2. When the product is to be removed, confirm that the safety measures as mentioned above are implemented and the power from any appropriate source is cut, and read and understand the specific product precautions of all relevant products carefully.
   3. Before machinery/equipment is restarted, take measures to prevent unexpected operation and malfunction.
4. **Contact SMC beforehand and take special consideration of safety measures if the product is to be used in any of the following conditions.**
   1. Conditions and environments outside of the given specifications, or use outdoors or in a place exposed to direct sunlight.
   2. Installation on equipment in conjunction with atomic energy, railways, air navigation, space, shipping, vehicles, military, medical treatment, combustion and recreation, or equipment in contact with food and beverages, emergency stop circuits, clutch and brake circuits in press applications, safety equipment or other applications unsuitable for the standard specifications described in the product catalogue.
   3. An application which could have negative effects on people, property, or animals requiring special safety analysis.
   4. Use in an interlock circuit, which requires the provision of double interlock for possible failure by using a mechanical protective function, and periodical checks to confirm proper operation.

Limited warranty and Disclaimer/ Compliance Requirements

The product used is subject to the following "Limited warranty and Disclaimer" and "Compliance Requirements".
Read and accept them before using the product.

Limited warranty and Disclaimer

1. The warranty period of the product is 1 year in service or 1.5 years after the product is delivered, wichever is first.*2)
   Also, the product may have specified durability, running distance or replacement parts. Please consult your nearest sales branch.
2. For any failure or damage reported within the warranty period which is clearly our responsibility, a replacement product or necessary parts will be provided.
   This limited warranty applies only to our product independently, and not to any other damage incurred due to the failure of the product.
3. Prior to using SMC products, please read and understand the warranty terms and disclaimers noted in the specified catalogue for the particular products.

*2) **Vacuum pads are excluded from this 1 year warranty.**
A vacuum pad is a consumable part, so it is warranted for a year after it is delivered.
Also, even within the warranty period, the wear of a product due to the use of the vacuum pad or failure due to the deterioration of rubber material are not covered by the limited warranty.

Compliance Requirements

1. The use of SMC products with production equipment for the manufacture of weapons of mass destruction (WMD) or any other weapon is strictly prohibited.
2. The exports of SMC products or technology from one country to another are governed by the relevant security laws and regulations of the countries involved in the transaction. Prior to the shipment of a SMC product to another country, assure that all local rules governing that export are known and followed.

⚠ Caution

1. **The product is provided for use in manufacturing industries.**
   The product herein described is basically provided for peaceful use in manufacturing industries.
   If considering using the product in other industries, consult SMC beforehand and exchange specifications or a contract if necessary.
   If anything is unclear, contact your nearest sales branch.

⚠ Caution

SMC products are not intended for use as instruments for legal metrology.
Measurement instruments that SMC manufactures or sells have not been qualified by type approval tests relevant to the metrology (measurement) laws of each country. Therefore, SMC products cannot be used for business or certification ordained by the metrology (measurement) laws of each country.

⚠ Safety Instructions Be sure to read "Handling Precautions for SMC Products" (M-E03-3) before using.

SMC Corporation (Europe)

Austria	☎ +43 (0)2262622800	www.smc.at	office@smc.at
Belgium	☎ +32 (0)33551464	www.smcpneumatics.be	info@smcpneumatics.be
Bulgaria	☎ +359 (0)2807670	www.smc.bg	office@smc.bg
Croatia	☎ +385 (0)13707288	www.smc.hr	office@smc.hr
Czech Republic	☎ +420 541424611	www.smc.cz	office@smc.cz
Denmark	☎ +45 70252900	www.smcdk.com	smc@smcdk.com
Estonia	☎ +372 6510370	www.smcpneumatics.ee	smc@smcpneumatics.ee
Finland	☎ +358 207513513	www.smc.fi	smcfi@smc.fi
France	☎ +33 (0)164761000	www.smc-france.fr	promotion@smc-france.fr
Germany	☎ +49 (0)61034020	www.smc.de	info@smc.de
Greece	☎ +30 210 2717265	www.smchellas.gr	sales@smchellas.gr
Hungary	☎ +36 23511390	www.smc.hu	office@smc.hu
Ireland	☎ +353 (0)14039000	www.smcpneumatics.ie	sales@smcpneumatics.ie
Italy	☎ +39 0292711	www.smcitalia.it	mailbox@smcitalia.it
Latvia	☎ +371 67817700	www.smclv.lv	info@smclv.lv
Lithuania	☎ +370 5 2308118	www.smclt.lt	info@smclt.lt
Netherlands	☎ +31 (0)205318888	www.smcpneumatics.nl	info@smcpneumatics.nl
Norway	☎ +47 67129020	www.smc-norge.no	post@smc-norge.no
Poland	☎ +48 (0)222119616	www.smc.pl	office@smc.pl
Portugal	☎ +351 226166570	www.smc.eu	postpt@smc.smces.es
Romania	☎ +40 213205111	www.smcromania.ro	smcromania@smcromania.ro
Russia	☎ +7 8127185445	www.smc-pneumatik.ru	info@smc-pneumatik.ru
Slovakia	☎ +421 (0)413213212	www.smc.sk	office@smc.sk
Slovenia	☎ +386 (0)73885412	www.smc.si	office@smc.si
Spain	☎ +34 902184100	www.smc.eu	post@smc.smces.es
Sweden	☎ +46 (0)86031200	www.smc.nu	post@smc.nu
Switzerland	☎ +41 (0)523963131	www.smc.ch	info@smc.ch
Turkey	☎ +90 212 489 0 440	www.smcpnomatik.com.tr	info@smcpnomatik.com.tr
UK	☎ +44 (0)845 121 5122	www.smcpneumatics.co.uk	sales@smcpneumatics.co.uk

SMC CORPORATION Akihabara UDX 15F, 4-14-1, Sotokanda, Chiyoda-ku, Tokyo 101-0021, JAPAN Phone: 03-5207-8249 FAX: 03-5298-5362

1st printing TO printing TO 00 Printed in Spain

Specifications are subject to change without prior notice and any obligation on the part of the manufacturer.