Downloaded from Arrow.com.

Copyright FCI.

FCIconnect.com

PRODUCT NUMBER	PITCH
TVxx51x000J0G	5.00 mm

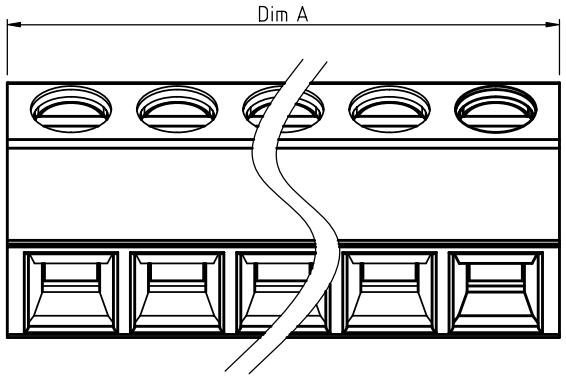

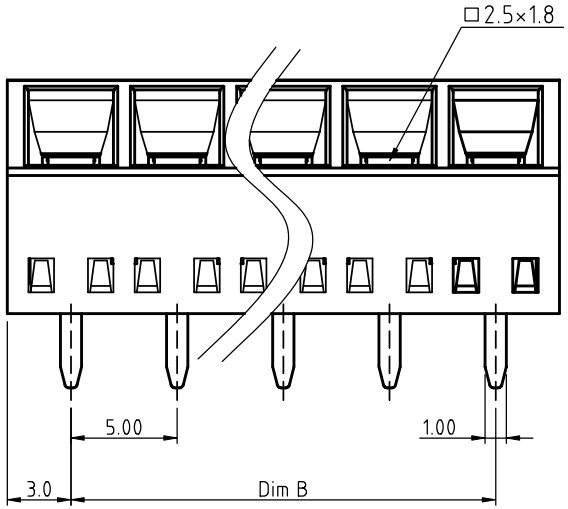

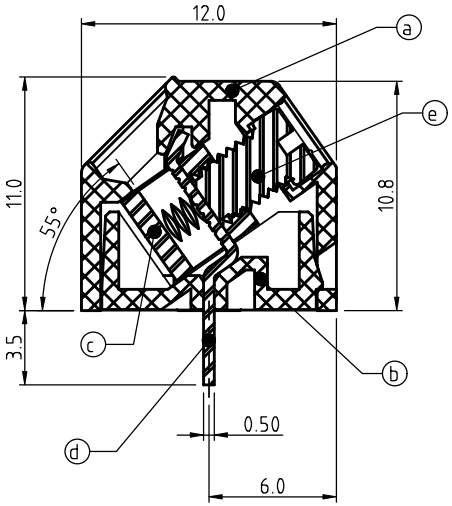

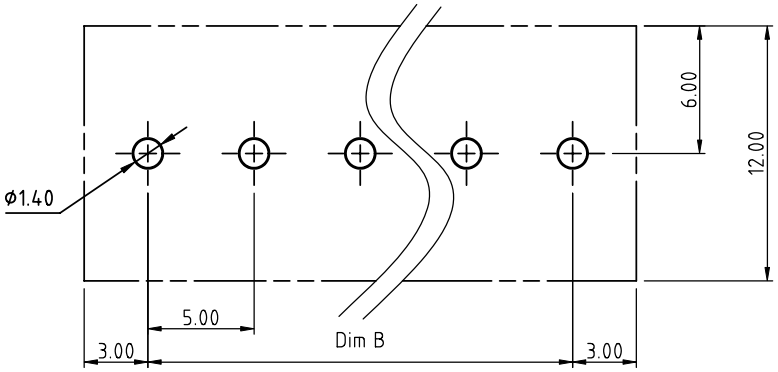

RECOMMENDED P.C.B LAYOUT
TOP VIEW

Material:

- Item ⓐ Terminal housing: Thermoplastic (UL 94V-0)
- Item ⓑ Terminal Cover: Thermoplastic (UL 94V-0)
- Item ⓒ Clamp: Brass ,Ni plated
- Item ⓓ Solder pin: Brass ,Tin plated
- Item ⓔ Terminal screw: Steel Zinc plating"-"slot type

Electrical cULus

- Voltage rating: 300VAC
- Current rating: 10A
- Wire range:
- Solid wire(AWG): 14-26
- Stranded wire(AWG): 16-26
- Torque(Lb-In): 3.5
- Screw: M3.0
- Wire strip length: 5-6mm
- Withstanding Voltage: 1.6KV
- Operating temperature: -40°C to +115°C
- Soldering temperature: 260°C±5°C/5 Sec
- Safety Approval: c UL us

DIMENSION

Dim A	NX5.0+1.00
Dim B	(N-1)X5.0

N=Number of poles

Poles	Tolerance
2p-6p	±0.10
7p-12p	±0.20
13p-18p	±0.30
19p-24p	±0.40

PART NO.: TV xx 5 1 x 0 00J0 G

Solid Block
No. of poles
02 2 poles
03 3 poles
... ...
24 24 poles

Body Color
0 Black (RAL9005)
2 Red (RAL3001/D)
3 Orange(RAL2011/P)
4 Yellow(RAL1018/A)
5 Green(RAL6018/T)
6 Blue (RAL5015/A)
8 Grey(RAL7035/D)
9 White(RAL1102)
C Green(RAL6018/U)

RoHS compliant
(lead<4%)
In copper Alloy

mat'l. code				surface ASME Y14.5	tolerance ASME Y14.5	projection
ltr	ecn no	dr	date	tolerances unless otherwise specified		
				angles	linear X.±0.5	MM
				X°±1°	X.X±0.3	
					X.XX±0.1	scale
				dr	EVIN ZHONG 040814	
				engr	EVIN ZHONG 040814	
				chr	HANKE FENG 040814	
				appd	SHI JUN 040814	
sheet index	revision	A				
	sheet	1				

product family: TERMINAL BLOCK

title: TERMINAL BLOCK
RISING CLAMP,55D WIRE INLET,SOLID BLOCK

dwg no: TVxx51x000J0G
sheet 1 of 1
size: A4

type: CUSTOMER Drawing

form: A4mmXLc

PDS: Rev :A STATUS:Released Printed: May 28 2014