SAMZO | REAC/ROHS

REV	ECN NO	DESRIPTION	DESIGN	APPROVAL	DATE
A1	NEW	Replace frame			2018.06.14

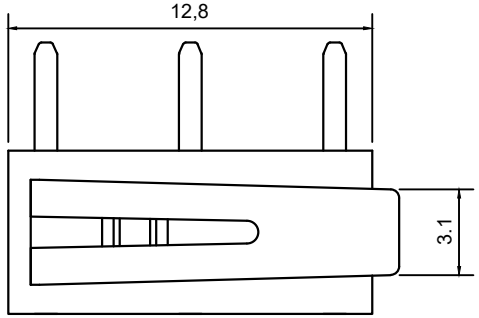

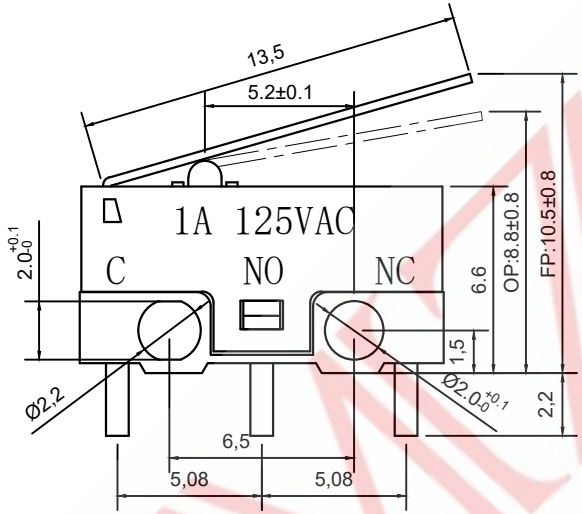

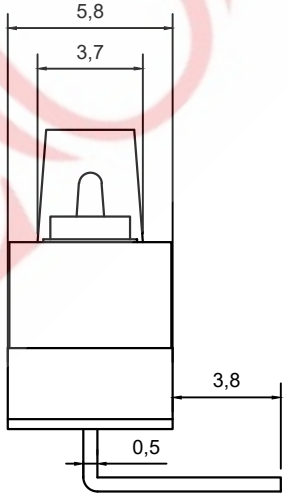

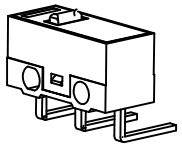

右弯脚

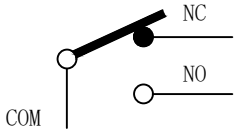

4B Y B B Y D B 135

Ⓐ Ⓑ Ⓒ Ⓓ Ⓔ Ⓕ Ⓖ Ⓗ

A. 系列:4B:12.8系列
B. 贴装方式:Y-右弯插件
C. 操作方式:B:压柄
D. 性能特性:B:1A 125V AC
E. 触点镀层:Y-镀银
F. 操作力度:D-50gf
G. 使用寿命:B:300,000万次
H. 压柄长：13.5mm（可定制）

Rating	DC30V 100mA	Electrical Life	100,000 cycles
Contact Resistance	500mΩ Max	Mechanical Life	300,000 cycles
Insulation Resistance	>100MΩ DC500V	Ambient Temper. Used	-25℃ to +85℃
Withstand Voltage	AC500V 1min.	Ambient Humidity Used	≤85% at +40℃
Soldering Temper.	235±5℃ 5s	Operating Force	50gf Max

H	压柄	SUS	1	XXX					
F	触点	银合金	1	镀银					
E	端子	C2680	3	镀银				GENERAL TOLERANCE	
D	弹片	C17200	1	进口高铍				≥0~2<	±0.15
C	按钮	PBT	1	白色	DESIGN	WANGGUIFA	2018.06.12	≥2~5<	±0.25
B	上盖	PBT	1	黑色	CHECKED	ZHENGUILAN	2018.06.12	≥0~2<	±0.15
A	底座	PBT	1	白色	APPROVED	LILIANJIANG	2018.06.14	≥5	±0.35

FIRST VIEW

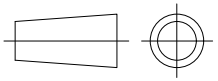

SCALE 1:1 UNIT mm

The copyright belongs to samzo parts [China] Co., Ltd. please use the material after samzo parts agree to authorize. The final right of interpretation belongs to samzo parts.
WWW.KKK-JP.COM

SAMZO COMPONENTS
Electronic switch and connector manufacturer

TITLE:: 12.8*5.8 右弯脚 柄长13.5mm
DWG NO：4BY1280-C01
PART NO：4BYDM1-02CR303
MODEL NO：4BYBBYDB135
NAME: MICRO SWITCH