Jul.1.2024 Copyright 2024 HIROSE ELECTRIC CO., LTD. All Rights Reserved.
In case of consideration for using Automotive equipment / device which demand high reliability, kindly contact our sales window correspondents.

	COUNT	DESCRIPTION OF REVISIONS	BY	CHKD	DATE		COUNT	DESCRIPTION OF REVISIONS	BY	CHKD	DATE
△					. .	△					. .
△					. .	△					. .
△					. .	△					. .

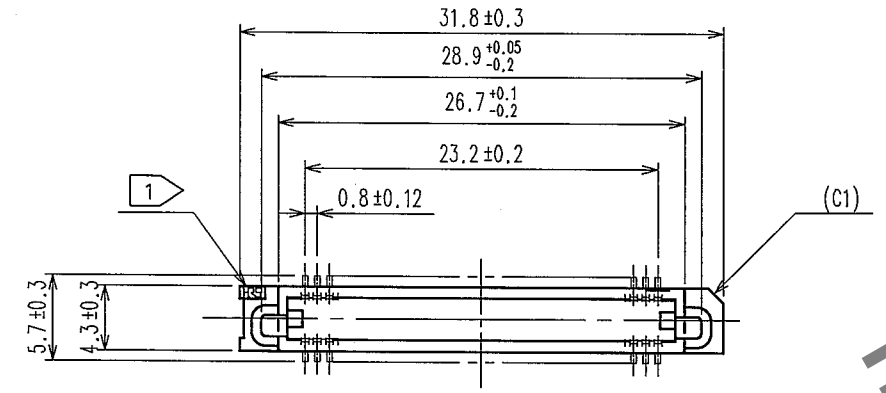

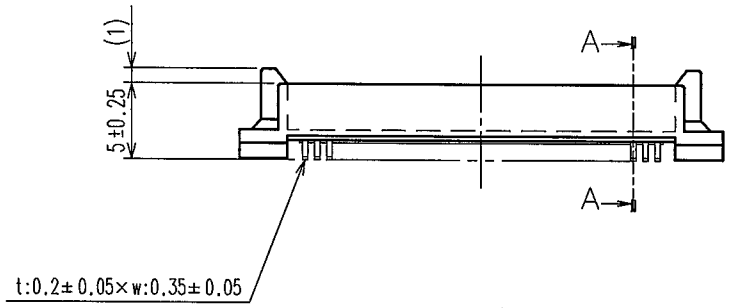

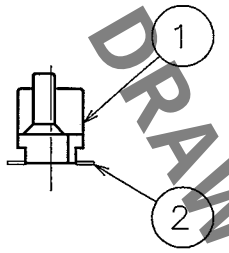

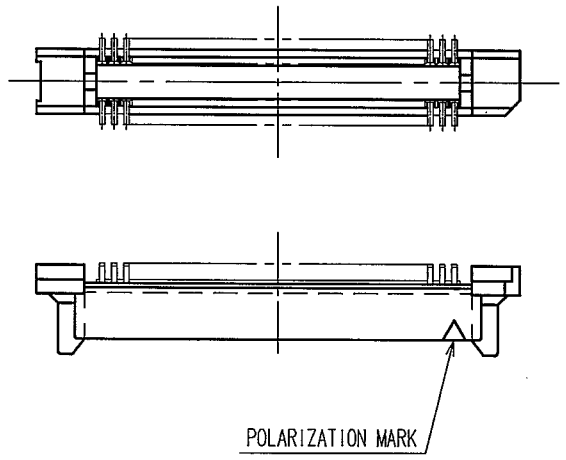

A-A(10:1)

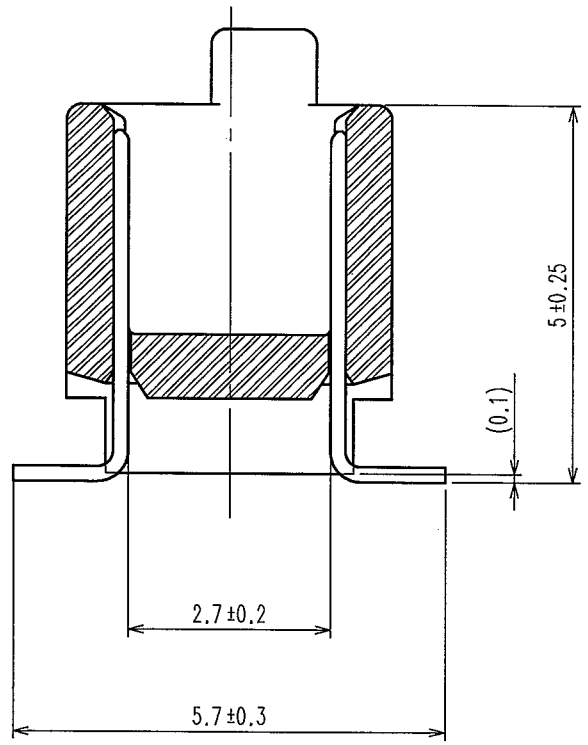

NOTE 1 HRS MARK SHALL BE OPTIONAL.
2 LEAD CO-PLANARITY SHALL BE 0.1mm MAX.
3 THE DIMENSIONS IN PARENTHESES ARE FOR REFERENCE.
4 EMBOSSED CARRIER TAPE PACKAGING SHALL BE APPLIED FOR THIS PRODUCT.
5 THIS PRODUCT HAS TAPE FOR VACUUM PICKUP.
SEE NEXT PAGE FOR DETAIL OF STICKING POSITION,ETC.
6 FOR MODIFICATION,ETC,PREVENTIVE HOLE FOR SINK MARK MAY BE ADDED ACCORDING TO CIRCUMSTANCES.

RECOMMENDED P.C.B. LAND PATTERN (MOUNT SIDE)

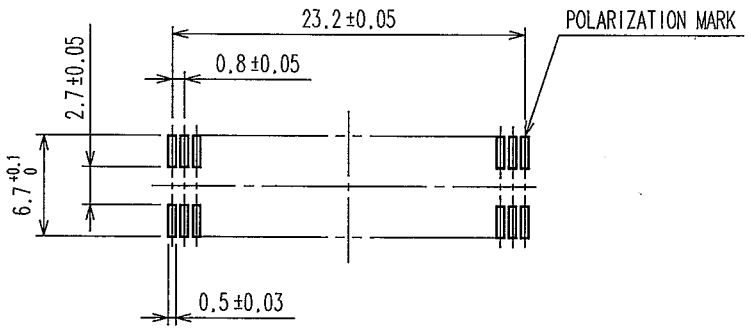

HRS DRAWING FOR REFERENCE

NO.	MATERIAL	FINISH, REMARKS	NO.	MATERIAL	FINISH, REMARKS
1	POLYPHENYLENE SULFIDE	LIGHT BROWN UL94V-0	2	PHOSPHOR BRONZE	CONTACT AREA : GOLD 0.1μm min. LEAD AREA : TIN-PLATING 1μm min. UNDER PLATING : NICKEL 1μm min.

CODE NO.(OLD)	DRAWN	DESIGNED	CHECKED	APPROVED	RELEASED
CL	Y.AOYAGI '05.09.15	J.Noda '05·09·26	K.Ogawa '05·09·26	H.Okawa '05·09·26	. .

SCALE	DRAWING NO.	PART NO.
2 : 1	EDC3-071325-23	FX6A-60P-0.8SV1(93)
UNITS mm	HRS HIROSE ELECTRIC CO., LTD	CODE NO. CL576-0225-0-93 1/2

TO

Jul.1.2024 Copyright 2024 HIROSE ELECTRIC CO., LTD. All Rights Reserved.
In case of consideration for using Automotive equipment / device which demand high reliability, kindly contact our sales window correspondents.

	COUNT	DESCRIPTION OF REVISIONS	BY	CHKD	DATE		COUNT	DESCRIPTION OF REVISIONS	BY	CHKD	DATE
△					. .	△					. .
△					. .	△					. .
△					. .	△					. .

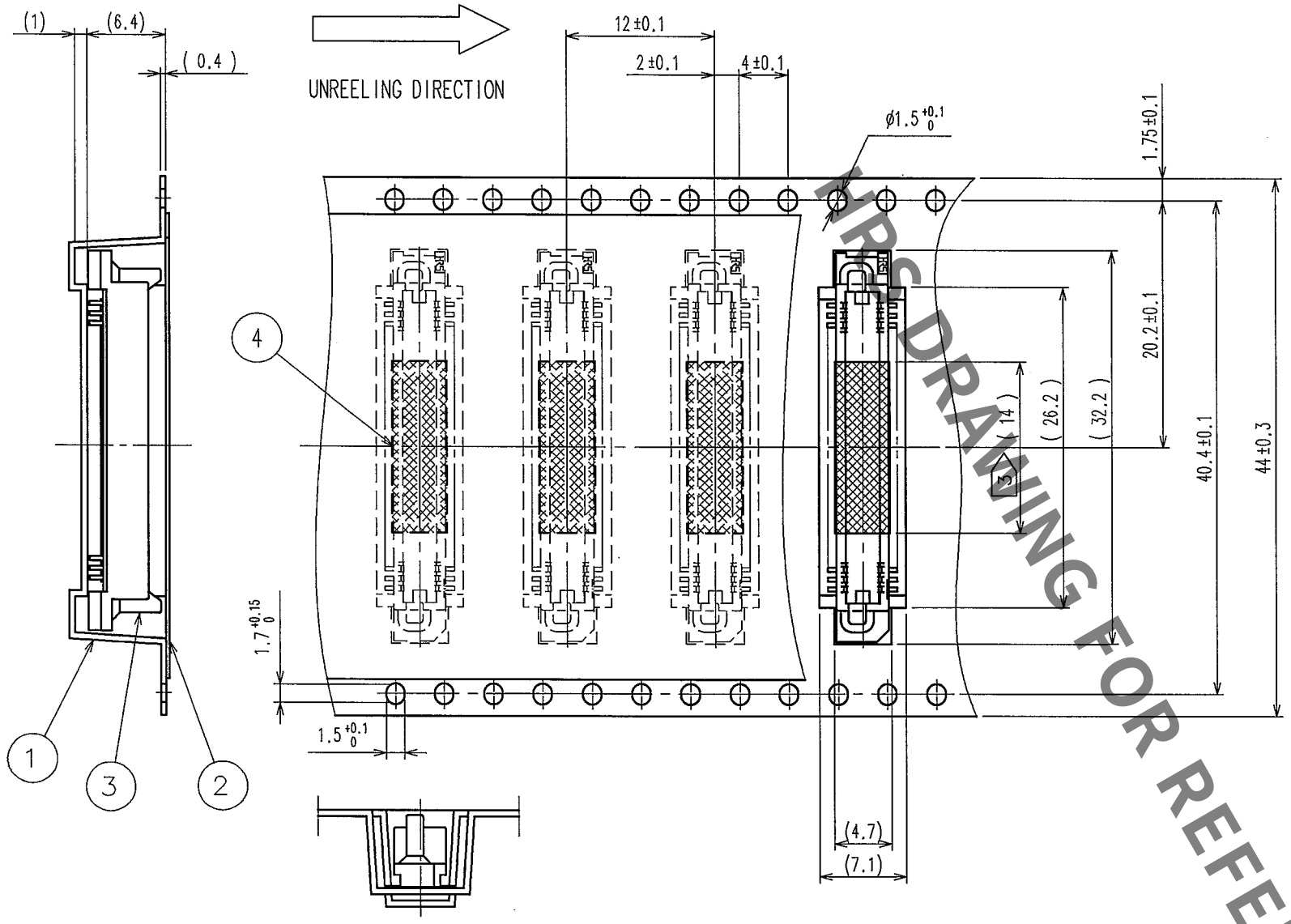

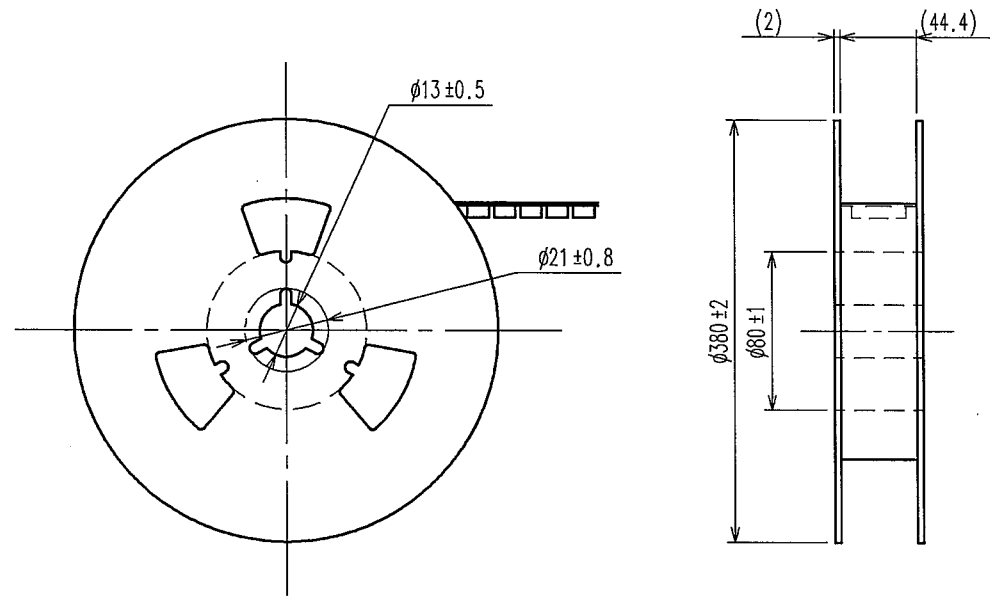

REEL DIMENSION (FREE)

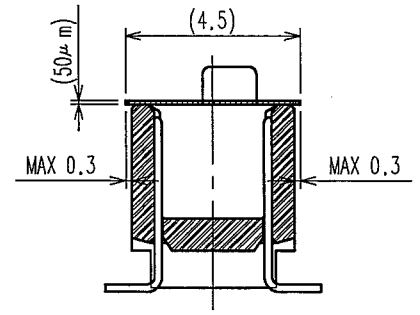

DETAIL OF TAPE FOR VACUUM PICKUP (5:1)

NOTE 1 THE DIMENSIONS IN PARENTHESES ARE FOR REFERENCE.
2 1 REEL : 1000 CONNECTORS
3 REMOVE THE VACUUM PICK-UP TAPE AFTER MOUNTING THE CONNECTOR.

HRS DRAWING FOR REFERENCE

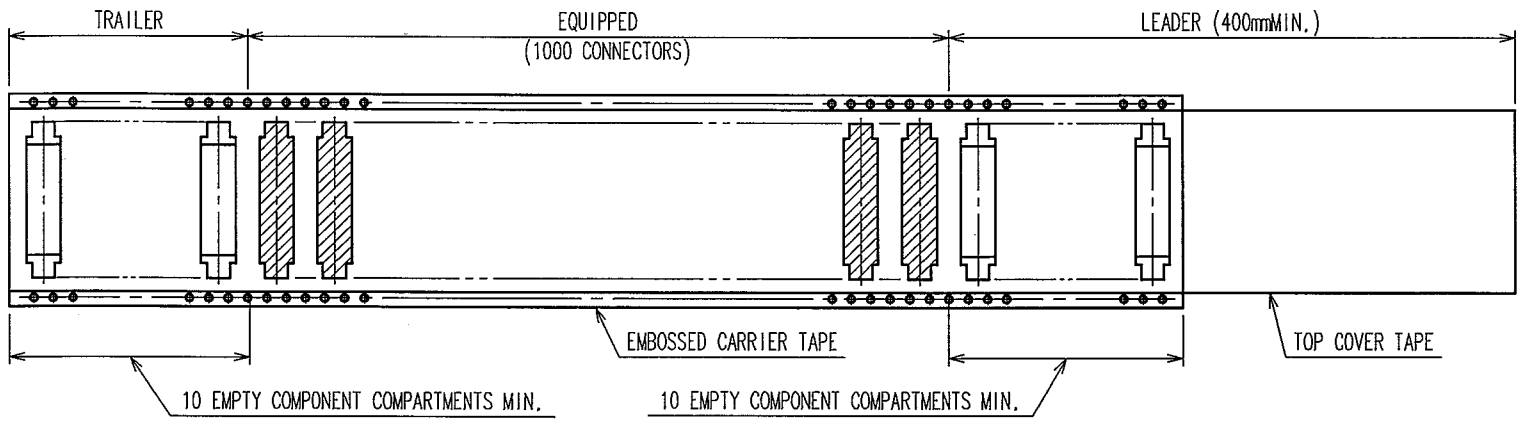

NO.	MATERIAL	FINISH, REMARKS	NO.	MATERIAL	FINISH, REMARKS
2	POLYESTER	TOP COVER TAPE	4	POLYIMIDE	TAPE FOR VACUUM PICKUP
1	POLYSTYRENE	EMBOSSED CARRIER TAPE	3		(CONNECTOR)

CODE NO.(OLD)	DRAWN	DESIGNED	CHECKED	APPROVED	RELEASED
CL	Y.AOYAGI '05.09.15	J.Noda '05.09.26	K.Ogawa '05.09.26	H.Okawa '05.09.26	. .

SCALE 2 : 1	DRAWING NO. EDC3-071325-23	PART NO. FX6A-60P-0.8SV1(93)
UNITS mm	HRS HIROSE ELECTRIC CO., LTD	CODE NO. CL576-0225-0-93

2/

TO