MATERIAL NO.	ENGINEERING NO.	FINISHED LENGTH
1300131178	1R3006A20A1208	12 IN [1FT]
1300130369	1R4006A20M0108	1M [3FT 3 IN]
1300131021	1R5006A20A1208	12 IN [1FT]
1300130602	1R6006A20F0208	2 FT [0.6M]

A1

CABLE LENGTH TOLERANCES
<.3M [1FT]: +19mm-0 [+.75in-0]
.3 - .9M [1 - 3FT]: +44.5mm-0 [+1.75in-0]
.9 - 1.8M [3 - 6FT]: +55.6mm-0 [+2.19in-0]
1.8 - 3.7M [6 - 12FT: +88.9mm-0 [+3.50in-0]
3.7 - 7.3M [12 - 24FT]: +165.1mm-0 [+6.50in-0]
7.3-14.6M [24 - 48FT]: +317.5mm-0 [+12.50in-0]
14.6 - 30.5M [48-100FT]: +622.3mm-0 [+24.50in-0]
OVER 30M [100FT] +2% OF FINISHED LENGTH

FACE VIEW - MALE INSERT

A1

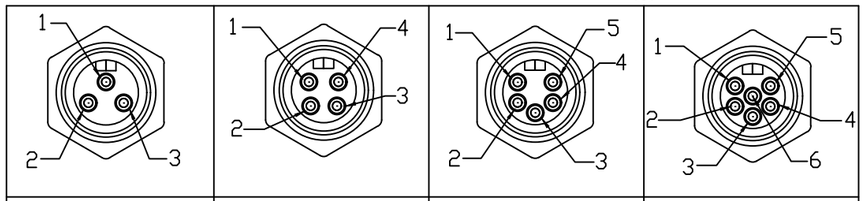

1 GREEN/YELLOW 2 BLACK 3 WHITE	1 BLACK 2 WHITE 3 RED 4 GREEN/YELLOW	1 WHITE 2 RED 3 GREEN/YELLOW 4 ORANGE 5 BLACK	1 WHITE 2 RED 3 GREEN/YELLOW 4 ORANGE 5 BLACK 6 BLUE

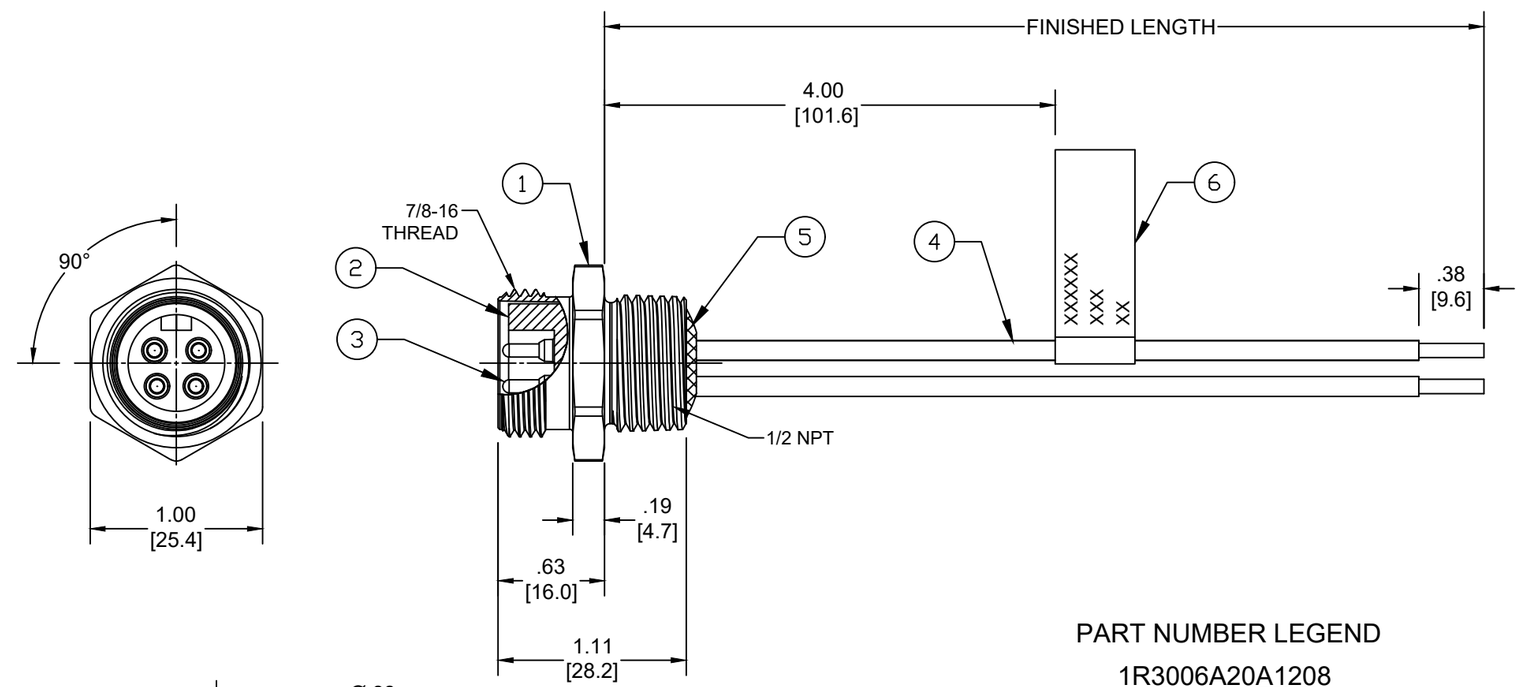

NOTES:
1. MATERIAL: AS NOTED
2. FINISH: AS NOTED
3. ELECTRICAL:
   VOLTAGE: 600V PER UL 2238
   3P 500V PER IEC 60664
   4P 483V PER IEC 60664
   5P & 6P 400V PER IEC 60664 A1
   CURRENT: 3 POLE: 13A
   4 POLE: 10A
   5 & 6 POLE: 8A A1
4. TEMP RATING: -20°TO +105°C
5. PROTECTION: IP67, IP69K (WHEN MATED)
6. UL RECOGNIZED FILE: E152210
   CSA CERTIFIED FILE: LR6837 A1
7. ALL DIMENSIONS ARE FOR REFERENCE UNLESS TOLERANCED OR NOTED OTHERWISE

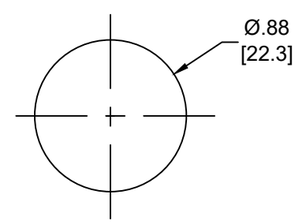

REF. KNOCKOUT HOLE

PART NUMBER LEGEND

1R3006A20A1208

POLES (3 - 6)

FINISHED LENGTH:
A120= 12 IN.
F030= 3 FEET
F100= 10 FEET

M005= 0.5 METER
M010= 1 METER
M100= 10 METER

ITEM	COMPONENT	MATERIAL	FINISH
6	FLAG LABEL	VINYL	BLACK/YELLOW
5	POTTING	EPOXY	
4	WIRE, 16 AWG, UL 1015	PVC INSULATION	SEE FACE VIEW
3	CONTACT PIN	COPPER ALLOY	GOLD PLATED
2	INSERT	TPE	YELLOW
1	RECEPTACLE SHELL	STAINLESS STEEL 316	PASSIVATED

THIS DRAWING CONTAINS INFORMATION THAT IS PROPRIETARY TO MOLEX ELECTRONIC TECHNOLOGIES, LLC AND SHOULD NOT BE USED WITHOUT WRITTEN PERMISSION

FUNCTIONAL SYMBOLS: FA=0, FC=0, FP=0
DIVISIONAL SYMBOLS

DIMENSION UNITS	SCALE
INCH/MM	NTS

GENERAL TOLERANCES (UNLESS SPECIFIED)

	mm	INCH
4 PLACES	± ----	± ----
3 PLACES	± ----	± ----
2 PLACES	± ----	± ----
1 PLACE	± ----	± ----
0 PLACES	± ----	± ----
ANGULAR TOL ± 1.0 °		

DRAFT WHERE APPLICABLE MUST REMAIN WITHIN DIMENSIONS

CURRENT REV DESC: ADDED 5P & 6P DETAILS. MODIFED PN TABLE. CORRECTED UL NUMBER. ADDED CSA IN NOTES

EC NO: 797107
DRWN: ABENJAMINLW 2024/09/02
CHK'D: PDODDAMANEMY 2024/09/03
APPR: BWOODMAN 2024/09/03

INITIAL REVISION:
DRWN: CCHRASTKA 2020/06/11
APPR: BWOODMAN 2020/06/17

THIRD ANGLE PROJECTION

molex

MINI CHANGE RECEPTACLE, A-SIZE
3 TO 6P, MALE, STRAIGHT, SINGLE KEY, #16 AWG

PRODUCT CUSTOMER DRAWING

DOCUMENT NUMBER	DOC TYPE	DOC PART	REVISION
1300660076	PSD	000	A1

DRAWING	SERIES	MATERIAL NUMBER	CUSTOMER	SHEET NUMBER
B-SIZE	130066	SEE TABLE	GENERAL MARKET	1 OF 1

DOCUMENT STATUS	P1	RELEASE DATE	2024/09/03 15:23:54

FORMAT: IN-ACAD-tb-prod-B
REVISION: B
DATE: 2020/01/14