SAMZO | REAC/ROHS

REV	ECN NO	DESRIPTION	DESIGN	APPROVAL	DATE
A1	NEW	Replace frame			2018.06.12

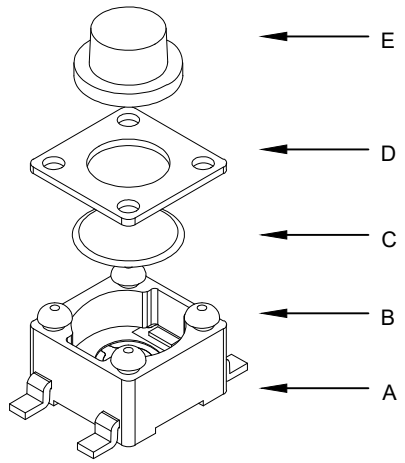

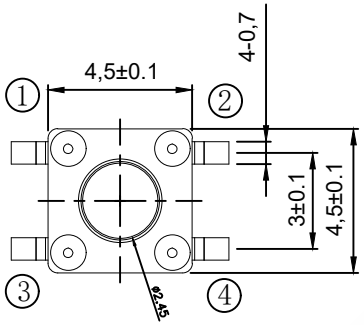

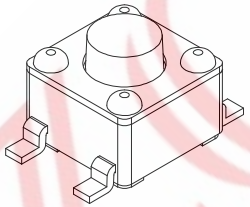

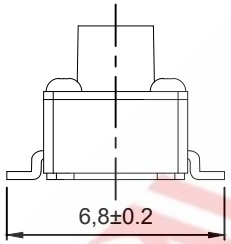

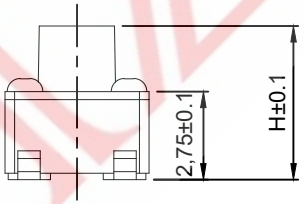

主要技术参数、性能
The Main Thchnology Performance

额定电流、电压 Rate voltage.current	50mA DC12V
接触电阻 Contact resistance	≤100mΩ
按力 Operating force	±30gf
行程 Travel	0.20±0.10mm
绝缘电阻 Insulated resistance	≥100MΩ
介电强度 Dielectric strength	≥250VAC/1min

F	4	B	*	*	*	*	*	1	0
Ⓐ	Ⓑ	Ⓒ		Ⓓ		Ⓔ	Ⓕ	Ⓖ	Ⓗ

A.产品系列:F-4.5*4.5mm SMT系列
B.贴装方式:4-立式贴片
C.贴装规格:B-4P
D.贴装高度:035-3.5mm/060-6.0mm/095-9.5mm(3.5-10.0)
E:操作力度:1-100gf/2-160gf/3-260gf/4-320gf
F:操作寿命:1-100,000次/2-500,000次/3-1,000,000次
G:固定方式:1-无柱
H:物料编码:0-常规(确认待编)

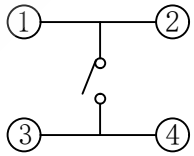

电路图
CIRCUIT DIAGRAM

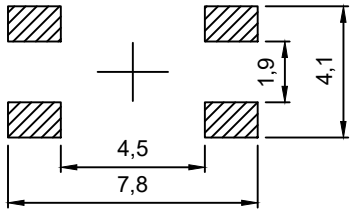

PCB.焊接图
PCB.WELDING DRAWING

ITEM	DESCRIPTION	MATERIAL	QTY	FINSH/COLOR					
E	按钮	黄铜	1	酸洗				GENERAL TOLERANCE	
D	盖板	不锈钢	1	清洗				≥0~2<	±0.15
C	弹片	不锈钢	1	镀银	DESIGN	WANGGUIFA	2018.06.12	≥2~5<	±0.25
B	本件	PPA	1	黑色	CHECKED	ZHENGUILAN	2018.06.12	≥0~2<	±0.15
A	卡件	黄铜	1	镀银	APPROVED	LILIANJIANG	2018.06.14	≥5	±0.35

FIRST VIEW

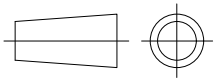

SCALE	1:1	UNIT	mm

The copyright belongs to samzo parts [China] Co., Ltd. please use the material after samzo parts agree to authorize. The final right of interpretation belongs to samzo parts.
WWW.KKK-JP.COM

SAMZO COMPONENTS
Electronic switch and connector manufacturer

TITLE:: 4.5*4.5*H mm 4P-LT
DWG NO: F4B000-P01
PART NO: F4B1511033
MODEL NO: F4B***-*-*-10
NAME: TACT SWITCH