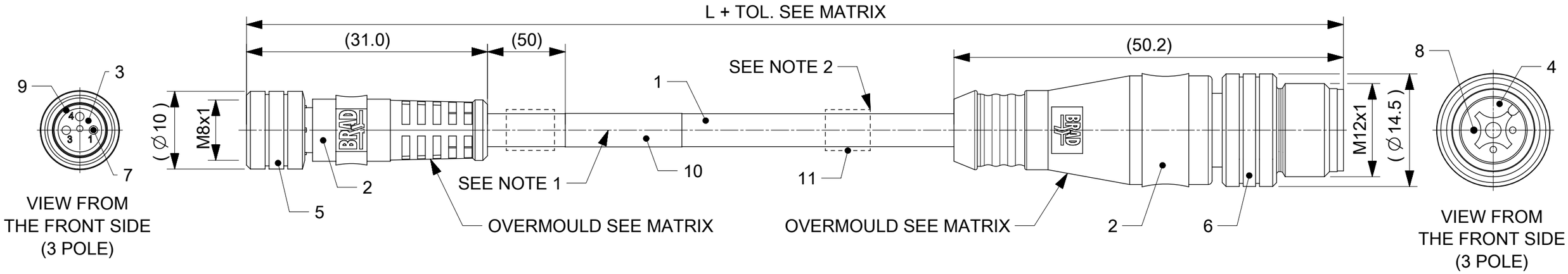


CONTACTS POSITION FRONT VIEW:

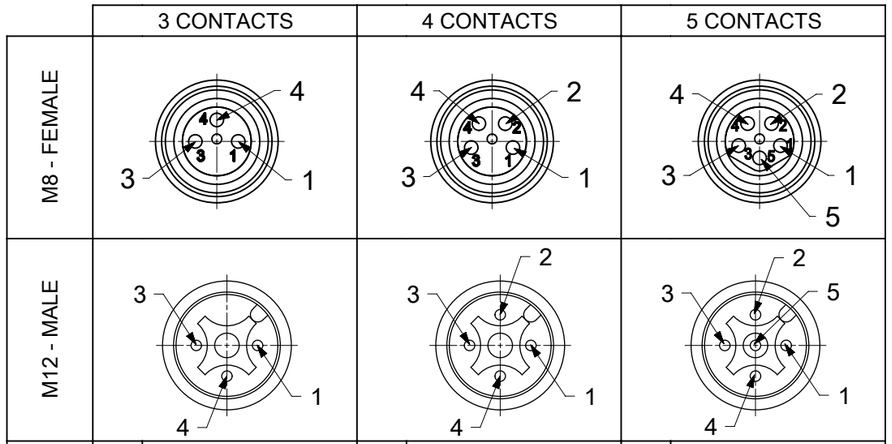


CONNECTIONS

| 3 CONTACTS PIN | 3 CONTACTS WIRE | 4 CONTACTS PIN | 4 CONTACTS WIRE | 5 CONTACTS PIN | 5 CONTACTS WIRE |
|---|---|---|---|---|---|
| 1 | BROWN | 1 | BROWN | 1 | BROWN |
| 3 | BLUE | 2 | WHITE | 2 | WHITE |
| 4 | BLACK | 3 | BLUE | 3 | BLUE |
| | | 4 | BLACK | 4 | BLACK |
| | | | | 5 | GREY |

CODING M8 ACCORDING TO IEC 61076-2-104
CODING M12 ACCORDING TO IEC IEC 61076-2-101

NOTES:

1. LABEL ON THE CABLE
   / FOR CABLE Ixx PRINTING ON THE CABLE
   (ENGINEERING No – THE SAME DIMENSION LIKE FOR LABEL)
2. 2 x ID CARRIER IF IN MATRIX IS "H"
   OR FOR CABLE IXX & P82.

ELECTRICAL DATA:
RATED VOLTAGE: 3 contacts 60V AC/DC
4 & 5 contacts 30V AC/DC
CURRENT RATING: 3, 4, 5 contacts 3A
PROTECTION CLASS: IP67
TEMPERATURE: SEE CABLE TYPE TABLE
PACKAGING ACCORDING TO PACKAGING SPEC. 1201202000

THIS DRAWING CONTAINS INFORMATION THAT IS PROPRIETARY TO MOLEX ELECTRONIC TECHNOLOGIES, LLC AND SHOULD NOT BE USED WITHOUT WRITTEN PERMISSION

FUNCTIONAL SYMBOLS: FA = 0, FC = 0, FP = 0
DIVISIONAL SYMBOLS

| DIMENSION UNITS | SCALE |
|---|---|
| mm | 2:1 |

GENERAL TOLERANCES (UNLESS SPECIFIED)

| | | |
|---|---|---|
| ANGULAR TOL | ± | 1.0 ° |
| 4 PLACES | ± | |
| 3 PLACES | ± | |
| 2 PLACES | ± | 0.05 |
| 1 PLACE | ± | 0.3 |
| 0 PLACES | ± | 0.5 |

DRAFT WHERE APPLICABLE MUST REMAIN WITHIN DIMENSIONS

CURRENT REV DESC: PACKAGING SPEC ADDED

EC NO: 770174
DRWN: RSCHIEBER 2023/11/17
CHK'D: RSILLER 2023/11/30
APPR: RSILLER 2023/11/30

INITIAL REVISION:
DRWN: AKONDRACIUK 2017/06/12
APPR: MIWASIECZKO 2017/06/14

molex

NC/MMC-XP-FE/MM-ST/ST-XM

PRODUCT CUSTOMER DRAWING

| DOCUMENT NUMBER | DOC TYPE | DOC PART | REVISION |
|---|---|---|---|
| 1200878038 | PSD | 000 | A10 |

| THIRD ANGLE PROJECTION | DRAWING | SERIES | MATERIAL NUMBER | CUSTOMER | SHEET NUMBER |
|---|---|---|---|---|---|
| | A3-SIZE | 120087 | SEE PART LIST | GENERAL MARKET | 1 OF 3 |

| DOCUMENT STATUS | P1 | RELEASE DATE | 2023/11/30 13:30:59 |
|---|---|---|---|

FORMAT: master_Sealed-A3
REVISION: J
DATE: 2020/01/14

# PART NO MATRIX

| 4 | 8 | * | 0 | 3 | 0 | * | * | * | M | * | * | * | * | * |
|---|---|---|---|---|---|---|---|---|---|---|---|---|---|---|

OPTIONS (last two positions)

- 48 = M8x1/M12x1 DOUBLE ENDED
- POLES:
  3 = 3 POLES
  4 = 4 POLES
  5 = 5 POLES
- HEADER:
  030 = FEMALE STRAIGHT
  - MALE STRAIGHT
- CABLE TYPE SEE TABLE
- UNIT:
  M = METER
- LENGTH:
  EXAMPLE:
  010 = 1 m
  050 = 5 m
  100 = 10 m
- H = 2 PCS. OF I/D CARIERR
  MOLDING/OVERMOULD:
  BLANK = BLACK
  BLANK = YELLOW TPE-E for cables K05
  BLANK = YELLOW PUR for cables A09
  A = GREY
  G = BLACK
  Y = YELLOW
  COUPLING NUT:
  BLANK=KNU/HEX
  7=TEFLON
  BLANK=7 for cables K05

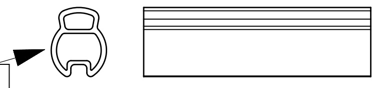

# CABLE TYPE TABLE

| CABLE TYPE | NO. OF WIRES | CROSS SECTION | CABLE JACKET | UL | CSA | STATIC: TEMP. / BENDING RADIUS | DYNAMIC: TEMP. / BENDING RADIUS | DRAG CHAIN | SHIELD |
|---|---|---|---|---|---|---|---|---|---|
| E02 | 3 / 4 | 0.25mm² | PVC BLACK | UL 2464/1729 | C22.2 I/II A/B 80°C/300V | -30°C to +80°C, 10xO.D. | -10°C to +80°C, 15xO.D. | - | - |
| H08 | 3 / 4 | 0.25mm² | PUR BLACK LS0H | UL 21198/10493 | C22.2 I/II A/B 80°C/300V | -40°C to +80°C, 5xO.D. | -25°C to +80°C, 10xO.D. | 2 000 000 cycles at 20°C, Temp. range +5°C to +60°C | - |
| P02 | 3 / 4 | 0.25mm² | PUR / PVC BLACK | - | - | -30°C to +80°C, 7xO.D. | -5°C to +80°C, 15xO.D. | - | - |
| P82 | 3 | 0.34mm² | PUR IRR ORANGE | - | - | -50°C to +105°C, >5xO.D. | -40°C to +105°C, >7.5xO.D. | - | - |
| I02 | 3 / 4 | 0.25mm² | PVC CEI GREY | - | - | -30°C to +70°C | -5°C to +70°C | - | - |
| A09 | 4 | 0.34mm² | PVC YELLOW | UL 2661 | I/II A/B 80°C/300V | - | - | - | - |
| K05 | 3 / 4 | 0.34mm² | TPE YELLOW | UL ITC or PLTC | I/II A/B 90°C/300V | max 105°C | - | - | - |

TABLE OF LENGTH TOLERANCES

| OVER (mm) | UP TO AND INCLUDING (mm) | TOLERANCE (+) (mm) |
|---|---|---|
| 0 | 305 | +19 |
| 305 | 915 | +45 |
| 915 | 1830 | +56 |
| 1830 | 3660 | +89 |
| 3660 | 7320 | +165 |
| 7320 | 14640 | +317 |
| 14640 | 30500 | +610 |
| 30500 | > | +2% OF LENGTH |

BILL OF MATERIALS

| ITEM | 3P | 4P | QTY. | DESCRIPTION | MATERIAL | FINISH |
|---|---|---|---|---|---|---|
| 1 | X | X | - | CABLE (SEE MATRIX) | - | - |
| 2 | X | X | - | MOULDING MATERIAL | SEE MATRIX | - |
| 3 | X | X | 3/4 | CONTACT 10 FE STA AU CR WRA 0.14-0.50 | COPPER | Au |
| 4 | X | X | 3/4 | CONTACT 10 MA STA NI AU CR WRA 0.14-0.5 | COPPER | Au |
| 5 | X | | 1,000 | INSERT M8 FE 3P 0C CSE PUR BK UNSH | PUR | BK |
| 6 | X | X | 1,000 | GASKET OR FKM 5.0X0.8 RD 70 | FKM | RD |
| 7 | X | X | 1,000 | NUT:M8:FEMALE-COUPLING | BRASS | |
| 8 | X | | 1,000 | MMC-3P-MALE/MALE INSERT | PUR | BK |
| 9 | X | X | 1,000 | M12 MALE COUPLING NUT-BRASS;rev.1 | BRASS | |
| 10 | X | X | 1,000 | HEAD BK M8 STR;12115-1;899921504 | TPU | BK |
| 11 | X | X | 1,000 | HEAD BK M12 STR;12114-1;899921504 | TPU | BK |
| 12 | X | X | 1,000 | LABEL;2.0X1.75;WRAP-B427;YE | PVC | YE |
| 13 | X | X | 2,000 | I/D CARRIER DIA 4-7MMX30MM | PVC | |
| 14 | | X | 1,000 | INSERT M8 FE 4P 0C CSE PUR BK UNSH | PUR | BK |
| 15 | | X | 1,000 | MMC-4P-MALE/MALE HOUSING | PUR | BK |

| DOCUMENT STATUS | P1 | RELEASE DATE | 2023/11/30 13:30:59 |
|---|---|---|---|

THIS DRAWING CONTAINS INFORMATION THAT IS PROPRIETARY TO MOLEX ELECTRONIC TECHNOLOGIES, LLC AND SHOULD NOT BE USED WITHOUT WRITTEN PERMISSION

| | |
|---|---|
| DIMENSION UNITS | mm |
| SCALE | 1:1 |
| GENERAL TOLERANCES (UNLESS SPECIFIED) | |
| ANGULAR TOL | ± 1.0 ° |
| 4 PLACES | ± |
| 3 PLACES | ± |
| 2 PLACES | ± 0.05 |
| 1 PLACE | ± 0.3 |
| 0 PLACES | ± 0.5 |

FUNCTIONAL SYMBOLS: = 0, = 0, = 0
DIVISIONAL SYMBOLS
DRAFT WHERE APPLICABLE MUST REMAIN WITHIN DIMENSIONS

CURRENT REV DESC: PACKAGING SPEC ADDED

EC NO: 770174
DRWN: RSCHIEBER 2023/11/17
CHK'D: RSILLER 2023/11/30
APPR: RSILLER 2023/11/30
INITIAL REVISION:
DRWN: AKONDRACIUK 2017/06/12
APPR: MIWASIECZKO 2017/06/14

molex

NC/MMC-XP-FE/MM-ST/ST-XM

PRODUCT CUSTOMER DRAWING

| DOCUMENT NUMBER | DOC TYPE | DOC PART | REVISION |
|---|---|---|---|
| 1200878038 | PSD | 000 | A10 |

| THIRD ANGLE PROJECTION | DRAWING | SERIES | MATERIAL NUMBER | CUSTOMER | SHEET NUMBER |
|---|---|---|---|---|---|
| | A3-SIZE | 120087 | SEE PART LIST | GENERAL MARKET | 2 OF 3 |

FORMAT: master-tb-prod-A3
REVISION: J
DATE: 2020/01/14

# PART LIST

| Part No | Engineering No | Cable Length |
|---|---|---|
| 1200668248 | 483030A09M006 | 0.6m |
| | | |
| 1200878404 | 483030E02M003 | 0.3m |
| 1200878459 | 484030E02M003 | 0.3m |
| 1200878460 | 484030E02M005 | 0.5m |
| 1200878405 | 483030E02M005 | 0.5m |
| 1200878461 | 484030E02M006 | 0.6m |
| 1200878038 | 483030E02M006 | 0.6m |
| 1200878073 | 484030E02M010 | 1m |
| 1200878406 | 483030E02M010 | 1m |
| 1200878462 | 484030E02M015 | 1.5m |
| 1200878955 | 483030E02M015 | 1.5m |
| 1200879032 | 484030E02M016 | 1.6m |
| 1200878961 | 484030E02M018 | 1.8m |
| 1200878039 | 483030E02M020 | 2m |
| 1200878463 | 484030E02M020 | 2m |
| 1200878962 | 484030E02M024 | 2.4m |
| 1200878464 | 484030E02M025 | 2.5m |
| 1200879033 | 484030E02M027 | 2.7m |
| 1200878408 | 483030E02M030 | 3m |
| 1200878074 | 484030E02M030 | 3m |
| 1200878963 | 484030E02M031 | 3.1m |
| 1200878466 | 484030E02M035 | 3.5m |
| 1200879034 | 484030E02M038 | 3.8m |
| 1200878467 | 484030E02M040 | 4m |
| 1200878964 | 484030E02M042 | 4.2m |
| 1200878468 | 484030E02M050 | 5m |
| 1200878409 | 483030E02M050 | 5m |
| 1200878469 | 484030E02M100 | 10m |
| 1200878410 | 483030E02M100 | 10m |
| 1200878646 | 483030E02M003H | 0.3m |
| 1200878597 | 483030E02M005H | 0.5m |
| 1200878696 | 484030E02M005H | 0.5m |
| 1200878647 | 483030E02M006H | 0.6m |
| 1200878407 | 483030E02M010H | 1m |
| 1200878662 | 484030E02M010H | 1m |
| 1200878668 | 484030E02M020H | 2m |
| 1200878648 | 483030E02M020H | 2m |
| 1200878669 | 484030E02M025H | 2.5m |
| 1200878649 | 483030E02M030H | 3m |
| 1200878465 | 484030E02M030H | 3m |
| 1200878656 | 483030E02M040H | 4m |
| 1200878670 | 484030E02M050H | 5m |
| 1200878650 | 483030E02M050H | 5m |

| Part No | Engineering No | Cable Length |
|---|---|---|
| 1200868220 | 483030H08M003 | 0.3m |
| 1200878147 | 484030H08M003 | 0.3m |
| 1200878565 | 484030H08M006 | 0.6m |
| 1200868221 | 483030H08M006 | 0.6m |
| 1200878516 | 484030H08M010 | 1m |
| 1200878510 | 483030H08M010 | 1m |
| 1200878566 | 484030H08M020 | 2m |
| 1200878578 | 484030H08M0209 | 2m |
| 1200878255 | 483030H08M020 | 2m |
| 1200878524 | 483030H08M030 | 3m |
| 1200878525 | 484030H08M030 | 3m |
| 1200878567 | 484030H08M050 | 5m |
| 1200878600 | 484030H08M0509 | 5m |
| 1200878511 | 483030H08M050 | 5m |
| 1200878598 | 484030H08M100 | 10m |
| 1200878512 | 483030H08M100 | 10m |
| 1200868619 | 483030H08M003H | 0.3m |
| 1200879000 | 484030H08M003H | 0.3m |
| 1200879008 | 484030H08M006H | 0.6m |
| 1200868935 | 483030H08M006H | 0.6m |
| 1200879005 | 484030H08M010H | 1.0m |
| 1200879064 | 483030H08M010H | 1.0m |
| 1200878544 | 483030H08M010Y | 1m |
| 1200878992 | 483030H08M015H | 1.5m |
| 1200878994 | 484030H08M015H | 1.5m |
| 1200879009 | 484030H08M020H | 2.0m |
| 1200879002 | 483030H08M020H | 2.0m |
| 1200878995 | 484030H08M025H | 2.5m |
| 1200878993 | 483030H08M025H | 2.5m |
| 1200879006 | 484030H08M030H | 3.0m |
| 1200878996 | 484030H08M035H | 3.5m |
| 1200879065 | 483030H08M035H | 3.5m |
| 1200868817 | 483030H08M040H | 4m |
| 1200879066 | 483030H08M045H | 4.5m |
| 1200879067 | 483030H08M050H | 5.0m |
| 1200879068 | 483030H08M055H | 5.5m |
| 1200879069 | 483030H08M060H | 6.0m |
| 1200879075 | 484030H08M060H | 6.0m |
| 1200879070 | 483030H08M065H | 6.5m |
| 1200879076 | 484030H08M065H | 6.5m |
| 1200879077 | 484030H08M070H | 7.0m |
| 1200879071 | 483030H08M070H | 7.0m |
| 1200879072 | 483030H08M075H | 7.5m |
| 1200879078 | 484030H08M075H | 7.5m |

| Part No | Engineering No | Cable Length |
|---|---|---|
| 1200879079 | 484030H08M080H | 8.0m |
| 1200879073 | 483030H08M080H | 8.0m |
| | | |
| 1200878411 | 483030I02M003 | 0.3m |
| 1200280282 | 483030I02M006 | 0.6m |
| 1200878519 | 484030I02M006 | 0.6m |
| 1200280056 | 483030I02M010 | 1m |
| 1200878520 | 484030I02M010 | 1m |
| 1200878412 | 483030I02M015 | 1.5m |
| 1200280057 | 483030I02M020 | 2m |
| 1200280058 | 483030I02M030 | 3m |
| 1200878470 | 484030I02M030 | 3m |
| 1200280059 | 483030I02M050 | 5m |
| 1200878523 | 484030I02M050 | 5m |
| 1200878549 | 483030I02M010Y | 1m |
| 1200878531 | 483030I02M020Y | 2m |
| 1200878829 | 483030I02M030Y | 3m |
| 1200878532 | 483030I02M050Y | 5m |
| 1200878830 | 483030I02M100Y | 10m |
| | | |
| 1200878550 | 484030K05M003 | 0.3m |
| 1200281261 | 483030K05M003 | 0.3m |
| 1200870491 | 483030K05M006 | 0.6m |
| 1200868555 | 484030K05M006 | 0.6m |
| 1200281315 | 484030K05M010 | 1.0m |
| 1200868556 | 484030K05M020 | 2.0m |
| 1200870493 | 483030K05M020 | 2.0m |
| 1200870496 | 483030K05M050 | 5.0m |
| 1200868557 | 484030K05M050 | 5.0m |
| 1200860669 | 484030K05M250 | 25m |
| 1200871081 | 483030K05M250 | 25m |

| Part No | Engineering No | Cable Length |
|---|---|---|
| 1200878121 | 483030P82M003 | 0.3m |
| 1200280411 | 483030P82M0037 | 0.3m |
| 1200878045 | 483030P82M0067 | 0.6m |
| 1200280869 | 483030P82M0107 | 1m |
| 1200280532 | 483030P82M030 | 3m |
| | | |
| 1200668183 | 483030P02M003 | 0.3m |
| 1200878413 | 483030P02M006 | 0.6m |
| 1200878471 | 484030P02M006 | 0.6m |
| 1200878414 | 483030P02M010 | 1m |
| 1200878472 | 484030P02M010 | 1m |
| 1200878848 | 483030P02M015 | 1.5m |
| 1200878849 | 484030P02M015 | 1.5m |
| 1200878473 | 484030P02M020 | 2m |
| 1200878415 | 483030P02M020 | 2m |
| 1200878416 | 483030P02M030 | 3m |
| 1200878474 | 484030P02M030 | 3m |
| 1200878475 | 484030P02M050 | 5m |
| 1200878417 | 483030P02M050 | 5m |
| 1200878418 | 483030P02M065 | 6.5m |
| 1200878419 | 483030P02M070 | 7m |
| 1200878420 | 483030P02M100 | 10m |
| 1200878476 | 484030P02M100 | 10m |

| | | | |
|---|---|---|---|
| DOCUMENT STATUS | P1 | RELEASE DATE | 2023/11/30 13:30:59 |

FUNCTIONAL SYMBOLS: FA = 0, FC = 0, FP = 0

DIVISIONAL SYMBOLS

THIS DRAWING CONTAINS INFORMATION THAT IS PROPRIETARY TO MOLEX ELECTRONIC TECHNOLOGIES, LLC AND SHOULD NOT BE USED WITHOUT WRITTEN PERMISSION

| DIMENSION UNITS | SCALE |
|---|---|
| mm | 1:1 |

GENERAL TOLERANCES (UNLESS SPECIFIED)

| | | |
|---|---|---|
| ANGULAR TOL | ± | 1.0 ° |
| 4 PLACES | ± | |
| 3 PLACES | ± | |
| 2 PLACES | ± | 0.05 |
| 1 PLACE | ± | 0.3 |
| 0 PLACES | ± | 0.5 |

DRAFT WHERE APPLICABLE MUST REMAIN WITHIN DIMENSIONS

CURRENT REV DESC: PACKAGING SPEC ADDED

EC NO: 770174
DRWN: RSCHIEBER 2023/11/17
CHK'D: RSILLER 2023/11/30
APPR: RSILLER 2023/11/30

INITIAL REVISION:
DRWN: AKONDRACIUK 2017/06/12
APPR: MIWASIECZKO 2017/06/14

molex

NC/MMC-XP-FE/MM-ST/ST-XM

PRODUCT CUSTOMER DRAWING

| DOCUMENT NUMBER | DOC TYPE | DOC PART | REVISION |
|---|---|---|---|
| 1200878038 | PSD | 000 | A10 |

| THIRD ANGLE PROJECTION | DRAWING | SERIES | MATERIAL NUMBER | CUSTOMER | SHEET NUMBER |
|---|---|---|---|---|---|
| | A3-SIZE | 120087 | SEE PART LIST | GENERAL MARKET | 3 OF 3 |

FORMAT: master Sheet-A3
REVISION: J
DATE: 2020/01/14

## FEMALE 4 POLE

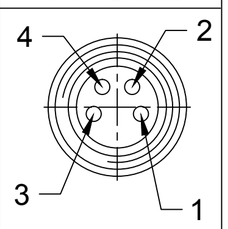


1 BROWN
2 WHITE
3 BLUE
4 BLACK

## MALE 4 POLE

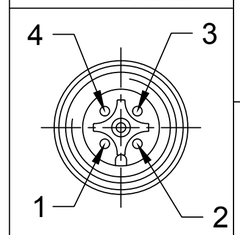


1 BROWN
2 WHITE
3 BLUE
4 BLACK

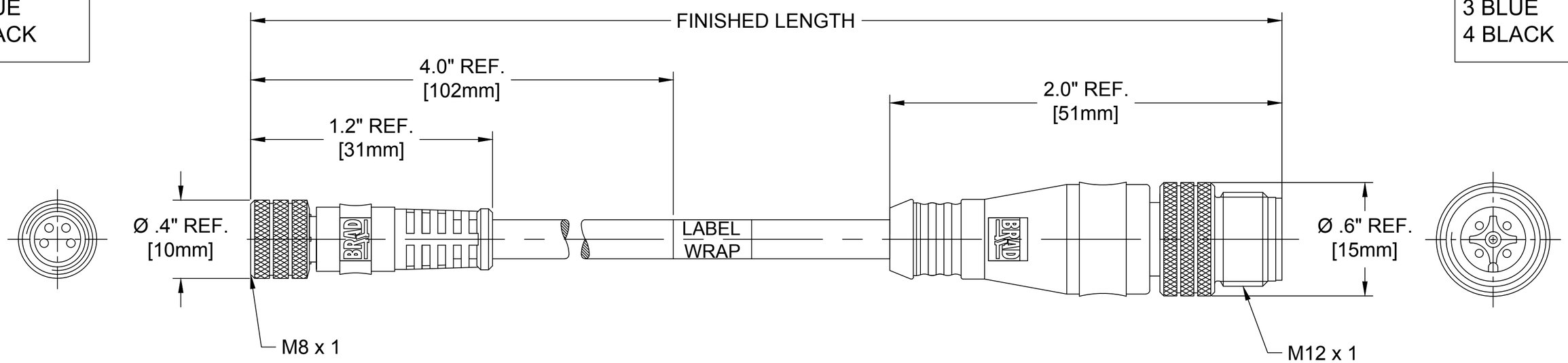


# 484030K05M050

cable type
4 x 0.34 mm²
YELLOW TPE

cable length
050----5 Meters
500----50 Meters

SPECIFICATION DATA

| COMPONENT | MATERIAL | FINISH |
|---|---|---|
| LABEL | MYLAR | BLACK/YELLOW |
| COUPLER | BRASS | NICKEL PLATED |
| CONTACT | COPPER ALLOY | Au OVER Ni |
| INSERT | PUR | BLACK |
| OVERMOLD | TPE | YELLOW |
| CABLE | TPE | YELLOW |
| VOLTAGE RATING: | | 60V AC/75V DC |
| AMPERAGE RATING: | | 4A |
| PROTECTION CLASS: | | IP 67 |
| OPERATING TEMPERATURE: | | -40°C / 105°C |

| REV | DESCRIPTION |
|---|---|
| C | UPDATED MALE END VIEW<br>EC NO: IPG2016-0921<br>DRWN: GGUSTAFS 2015/12/17<br>CH'KD: BARDEN 2016/01/20<br>APPR: BWOODMAN2013/12/02 |

QUALITY SYMBOL
▼=0
(C)=0

GENERAL TOLERANCES (UNLESS SPECIFIED)

| | mm | INCH |
|---|---|---|
| 4 PLACES | ±--- | ±--- |
| 3 PLACES | ±--- | ±.005 |
| 2 PLACES | ±.13 | ±.010 |
| 1 PLACE | ±.25 | ±.020 |
| ANGULAR ±1/2° | | |

DRAFT WHERE APPLICABLE MUST REMAIN WITHIN DIMENSIONS

DIMENSION STYLE: IN/MM
SCALE: NTS
DESIGN UNITS: INCH
THIRD ANGLE PROJECTION

DRAWN BY: GGUSTAFS DATE: 2013/10/09
CHECKED BY: BARDEN DATE: 2013/11/20
APPROVED BY: BWOODMAN DATE: 2013/12/02

TITLE: NANO CHANGE MIRCO CHANGE 4 POLE FEMALE/MALE ST/ST #22 TPE

molex MOLEX INCORPORATED

MATERIAL NO.: SEE CHART
DOCUMENT NO.: SD-120086-058
SHEET NO.: 1 0F 1
SIZE: C

THIS DRAWING CONTAINS INFORMATION THAT IS PROPRIETARY TO MOLEX INCORPORATED AND SHOULD NOT BE USED WITHOUT WRITTEN PERMISSION