SAMZO | REAC/ROHS

REV	ECN NO	DESRIPTION	DESIGN	APPROVAL	DATE
A1	NEW	Replace frame			2018.06.12

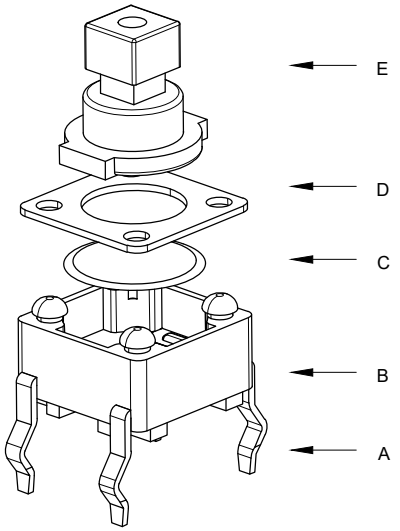

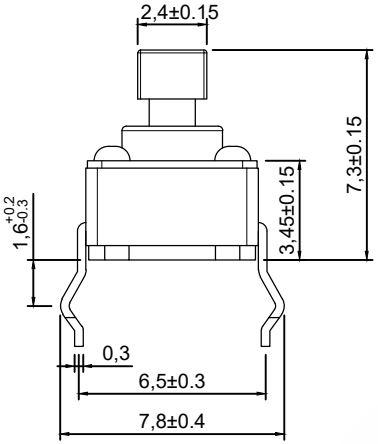

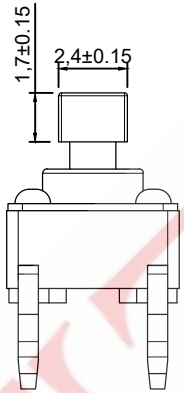

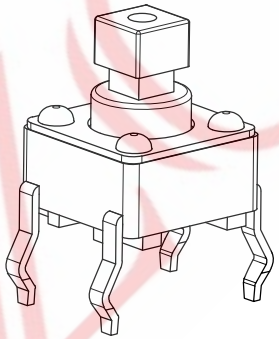

主要技术参数、性能
The Main Thchnology Performance

额定电流、电压 Rate voltage.current	50mA DC12V
接触电阻 Contact resistance	≤100mΩ
按力 Operating force	±50gf
行程 Travel	0.25±0.10mm
绝缘电阻 Insulated resistance	≥100MΩ
介电强度 Dielectric strength	≥250VAC/1min

J 1 L 73 * * 1 0
A B C D E F G H

A. 系列:J-6*6mm
B. 贴装方式:1-立式插件
C. 引脚规格:L-4PIN
D. 操作高度:73-7.3mm
E:操作力度:1-160/2-260gf
F:操作寿命:1-100,000/2-1,000,000次
G:固定方式:1-无柱
H:物料编码:0-常规

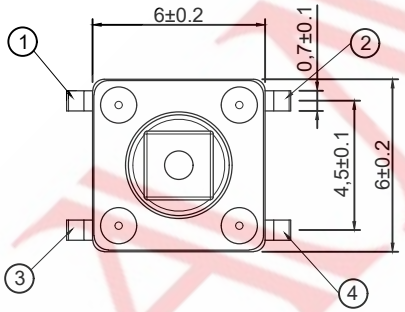

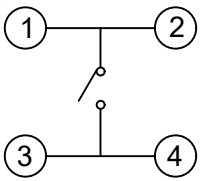

电路图
CIRCUIT DIAGRAM

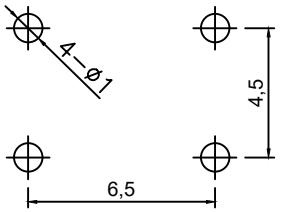

PCB. 焊接图
PCB. WELDING DRAWING

项目 ITEM	名称 DESCRIPTION	材质 MATERIAL	数量 QTY	表面处理/颜色 FINSH/COLOR
E	按钮	PPA	1	黑色
D	盖板	铁/黄铜	1	镀铜锡
C	弹片	磷铜/不锈钢	1	镀银
B	本体	PPA	1	黑色
A	卡件	黄铜	1	镀银

DESIGN	WANGGUIFA	2018.06.12
CHECKED	ZHENGUILAN	2018.06.12
APPROVED	LILIANJIANG	2018.06.14

GENERAL TOLERANCE	
≥0~2<	±0.15
≥2~5<	±0.25
≥0~2<	±0.15
≥5	±0.35

FIRST VIEW

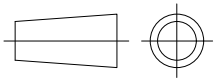

SCALE	1:1	UNIT	mm

The copyright belongs to samzo parts [China] Co., Ltd. please use the material after samzo parts agree to authorize. The final right of interpretation belongs to samzo parts.
WWW.KKK-JP.COM

SAMZO COMPONENTS
Electronic switch and connector manufacturer

TITLE:: 6*6*7.3方头立式插件
DWG NO: J1L-P30170
PART NO: J1L7318030
MODEL NO: J1L73-*-*-10
NAME: TACT SWITCH