REVISIONS							
REV	ZONE	ECO	DESCRIPTION	DATE	BY	CHK	APPR
A1	-	-	TECHNICAL DATA SHEET RELEASE	08 OCT 15	JLAG	-	–

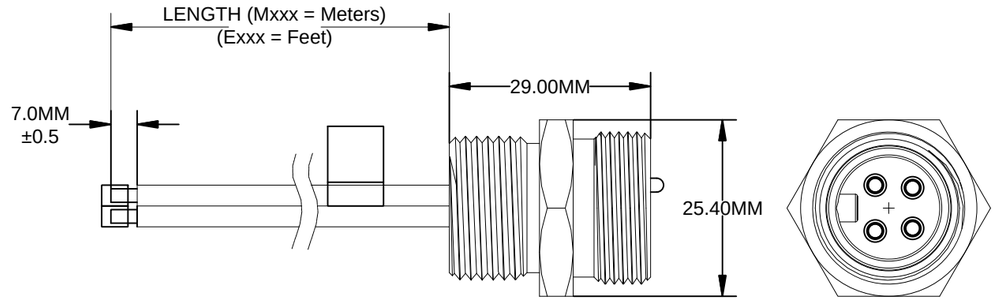

WIRING DIAGRAM

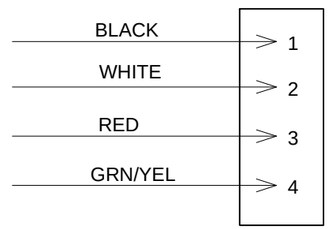

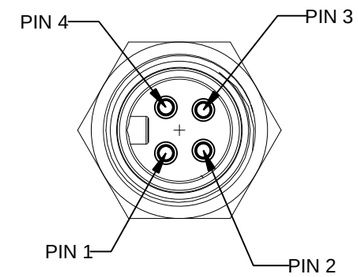

FACE VIEW

TECHNICAL DATA:

1) MATERIALS:
- COUPLING NUT: MACHINED ALUMINUM, ANODIZED
- INSULATION INSERT: THERMOPLASTIC, UL 94/V-0
- CONTACT: GOLD FLASH PLATING OVER COPPER ALLOY
- CABLE RATING: UL LISTED TYPE 1015, CSA CERTIFIED TYPE TEW, FT1 FLAME RATING, 600V, 105°C
- CABLE JACKET MATERIAL: PVC
- CONDUCTOR INSULATION: PVC
- NUMBER OF CONDUCTORS: (4) 16AWG

2) ELECTRICAL DATA:
- CURRENT (MAX): 10A
- VOLTAGE (MAX): 600V AC/DC
- INSULATION RESISTANCE (MIN): 5000M OHMS
- DIELECTRIC TEST VOLTAGE: 2200V

3) MECHANICAL DATA:
- TEMPERATURE RANGE: -20°C TO +105°C
- PROTECTION: IP67 (MATED CONDITION)
- MATING CYCLES: >500
- VIBRATION RESISTANCE PER MIL-STD-202 METHOD 204
- THERMAL SHOCK PER MIL-STD-202 METHOD 207
- 48 HOUR SALT SPRAY PER MIL-STD-202 METHOD 101

4) RoHS COMPLIANT
5) UL 2238 LISTED ASSEMBLY
UL FILE NUMBERS: E224856

Risk of Electrical Shock
Do Not Disconnect Under Load.
Risque de chocs electriques
Ne pas debrancher sous tension.
WARNING

TOLERANCE	
0-2.99 M = +100.0/-25.0mm	0-9.99 FT = +4" / -1"
3-8.99 M = +150.0/-25.0mm	10.00-29.99 FT = +6" / -1"
9-14.99 M = +300.0/-25.0mm	30.00-49.99 FT = +12" / -1"
15-OVER M = +450.0/-25.0mm	50 FT-OVER = +18" / -1"

QUANTITY	PART NUMBER	DESCRIPTION	ITEM
	MATERIALS LIST		

UNLESS OTHERWISE SPECIFIED
1) All dimensions are in metric(mm).
2) Tolerances are as follows:
1 PL DEC ±0.30
2 PL DEC ±0.15
3 PL DEC ±0.08
Fractions ±1/64
Angles ±1°
3) Note reference = X

SIGNATURES		DATE
DRAWN:	KMM	12-MAY-14
CHECKED:	MRF	12-MAY-14
ENGINEER:	KMM	
APPROVAL:	RFC	12-MAY-14
CUSTOMER:		

MATERIAL SPECIFICATIONS:

PROCESS SPECIFICATIONS:

NEXT ASS'Y:

THIS DRAWING IS SUPPLIED FOR INFORMATION ONLY. DESIGN FEATURES, SPECIFICATIONS AND PERFORMANCE DATA SHOWN HEREON ARE THE PROPERTY OF THE AMPHENOL CORPORATION. NO RIGHTS OF REPRODUCTION ARE IMPLIED. ALL DIMENSIONS ARE SUBJECT TO NORMAL MANUFACTURING VARIATIONS.

Amphenol

Sine Systems - www.sineco.com
44724 Morley Drive
Clinton Township, MI 48036

MINIBOSS M22 (7/8"), 4 PIN, Male Receptacle, External threads, 16 AWG, UL1015, PVC Wire

SIZE	TYPE	DWG NO:	REVISION
	C-	MN41PW02M	A1

SCALE: HALF | MN41PW02M | SHEET 1 OF 1

TITLE: 4 PIN MINI, RECPT, # METERS
DWG NO: MN41PW02Mxxx
REV: B7
SH: 1
OF: 1