REF. -49 OPT. SCREW
(WHERE APPLICABLE)

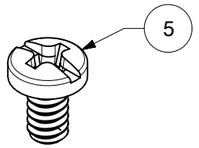

REF. -50 OPT. SCREW
(WHERE APPLICABLE)

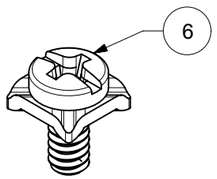

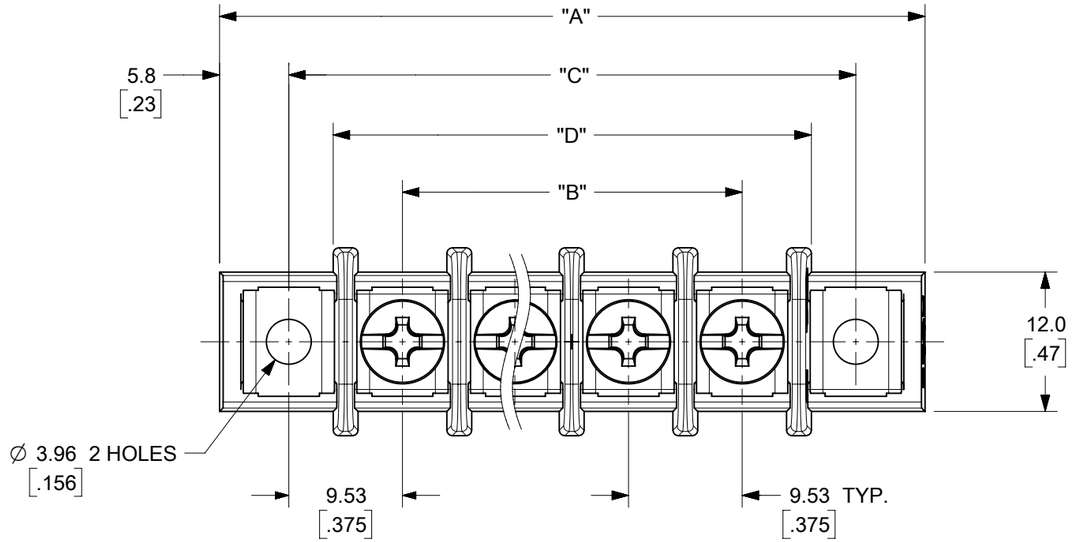

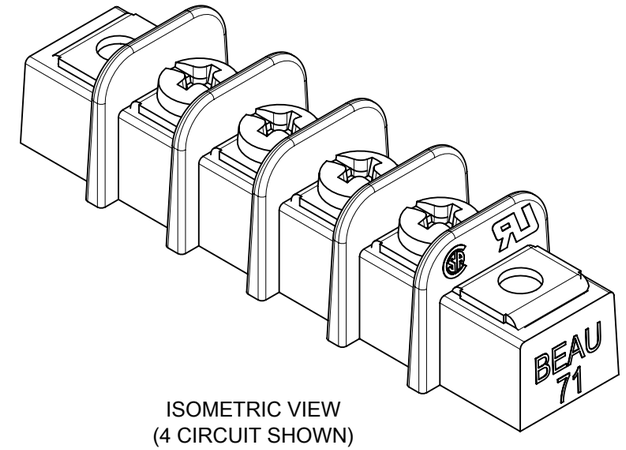

ISOMETRIC VIEW
(4 CIRCUIT SHOWN)

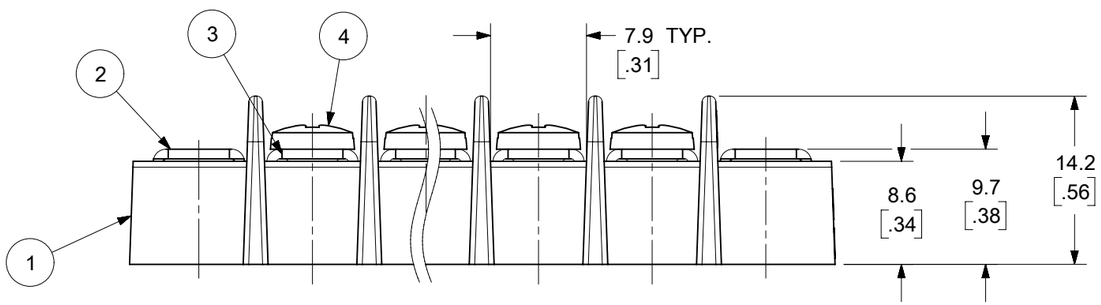

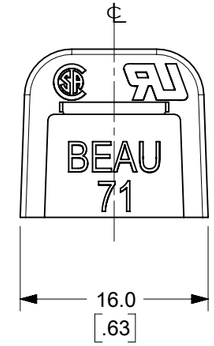

PART NUMBER LEGEND

71 - 1 - XX - XX

- SERIES
- TERMINAL STYLE
- CIRCUIT QTY. (2 TO 26)
- OPTION (-49 BRASS, PHIL/SLOT SCREW) (-50 CLAMP WASHER, PHIL/SLOT SCREW)

NOTES:

1. MATERIAL: SEE TABLE
2. FINISHES: SEE TABLE
3. PRODUCT SPECIFICATION: PS-38710-001
4. "XX" REFERS TO THE QUANTITY OF CIRCUITS.
5. ASSEMBLY IS RoHS COMPLIANT.

TOLERANCES			
MM	TOL	INCH	TOL
0-6	±0.25	0-.24	±.010
>6-30	±0.40	.24-1.18	±.016
>30-120	±0.50	1.18-4.76	±.020
>120	±0.80	>4.76	±.031

ITEM	QTY.	DESCRIPTION	MATERIAL	FINISH
6	XX	SCREW W/WASHER, #6-32 X .250 PAN, PHIL-SLOT (-50 OPT)	STEEL	ZINC
5	XX	SCREW, #6-32 X .250, BHD, PHIL-SLOT (-49 OPT)	BRASS	NICKEL
4	XX	SCREW, #6-32 X .250, BHD, PHIL-SLOT	STEEL	ZINC
3	XX	TERMINAL, CB	BRASS	TIN PLATED
2	2	MOUNTING PLATE	BRASS	NICKEL
1	1	INSULATOR	POLYESTER (PBT)	BLACK

A1

DOCUMENT STATUS	P1	RELEASE DATE	2023/08/23 16:23:49

FORMAT: Eng-lega-master-lb-prod-B
REVISION: E1
DATE: 2021/05/01

THIS DRAWING CONTAINS INFORMATION THAT IS PROPRIETARY TO MOLEX ELECTRONIC TECHNOLOGIES, LLC AND SHOULD NOT BE USED WITHOUT WRITTEN PERMISSION

FUNCTIONAL SYMBOLS: FA = 0, FC = 0, FP = 0

DIVISIONAL SYMBOLS

DIMENSION UNITS: MM/INCH
SCALE: 2:1

GENERAL TOLERANCES (UNLESS SPECIFIED)

	MM	INCH
4 PLACES	± ---	± ---
3 PLACES	± ---	± SEE CHART
2 PLACES	± SEE CHART	± SEE CHART
1 PLACE	± SEE CHART	± ---
0 PLACES	± ---	± ---
ANGULAR TOL	± ---	

DRAFT WHERE APPLICABLE MUST REMAIN WITHIN DIMENSIONS

CURRENT REV DESC: MIGRATED TO ECTR/NX.
ADDED ITEM-3. UPDATED PART NUMBER TABLE

EC NO: 744321
DRWN: ABENJAMINLW 2022/04/12
CHK'D: DACHAMMER 2023/03/29
APPR: JFMURPHY 2023/08/23

INITIAL REVISION:
DRWN: SVMURTHY 2015/06/30
APPR: JFMURPHY 2016/07/11

THIRD ANGLE PROJECTION

DRAWING: B-SIZE
SERIES: 38710

molex

9.53MM [.375"] SR BTS
NO TERMINAL, MTG ENDS

PRODUCT CUSTOMER DRAWING

DOCUMENT NUMBER	DOC TYPE	DOC PART	REVISION
SD-38710-0202	PSD	001	A1

MATERIAL NUMBER	CUSTOMER	SHEET NUMBER
SEE SHEET-2	GENERAL MARKET	1 OF 2

A1

NO. OF CIRCUITS "XX"	DIM. "A"		DIM. "B"		DIM. "C"		DIM. "D"		ASSEMBLY MATERIAL NO. (STD)	ASSEMBLY MATERIAL NO. (OPT -49)	ASSEMBLY MATERIAL NO. (OPT -50)
	MM	IN	MM	IN	MM	IN	MM	IN			
02	40.2	[1.58]	9.53	[.375]	28.58	[1.125]	21.1	[.83]	387100202	387100802	387101402
03	49.7	[1.96]	19.05	[.750]	38.10	[1.500]	30.7	[1.21]	387100203	387100803	387101403
04	59.2	[2.33]	28.58	[1.125]	47.63	[1.875]	40.2	[1.58]	387100204	387100804	387101404
05	68.7	[2.71]	38.10	[1.500]	57.15	[2.250]	49.7	[1.96]	387100205	387100805	387101405
06	78.3	[3.08]	47.63	[1.875]	66.68	[2.625]	59.2	[2.33]	387100206	387100806	387101406
07	87.8	[3.46]	57.15	[2.250]	76.20	[3.000]	68.7	[2.71]	387100207	387100807	387101407
08	97.3	[3.83]	66.68	[2.625]	85.73	[3.375]	78.3	[3.08]	387100208	387100808	387101408
09	106.8	[4.21]	76.20	[3.000]	95.25	[3.750]	87.8	[3.46]	387100209	387100809	387101409
10	116.4	[4.58]	85.73	[3.375]	104.78	[4.125]	97.3	[3.83]	387100210	387100810	387101410
11	125.9	[4.96]	95.25	[3.750]	114.30	[4.500]	106.8	[4.21]	387100211	387100811	387101411
12	135.4	[5.33]	104.78	[4.125]	123.83	[4.875]	116.4	[4.58]	387100212	387100812	387101412
13	144.9	[5.71]	114.30	[4.500]	133.35	[5.250]	125.9	[4.96]	387100213	387100813	387101413
14	154.5	[6.08]	123.83	[4.875]	142.88	[5.625]	135.4	[5.33]	387100214	387100814	387101414
15	164.0	[6.46]	133.35	[5.250]	152.40	[6.000]	144.9	[5.71]	387100215	387100815	387101415
16	173.5	[6.83]	142.88	[5.625]	161.93	[6.375]	154.5	[6.08]	387100216	387100816	387101416
17	183.0	[7.21]	152.40	[6.000]	171.45	[6.750]	164.0	[6.46]	387100217	387100817	387101417
18	192.6	[7.58]	161.93	[6.375]	180.98	[7.125]	173.5	[6.83]	387100218	387100818	387101418
19	202.1	[7.96]	171.45	[6.750]	190.50	[7.500]	183.0	[7.21]	387100219	387100819	387101419
20	211.6	[8.33]	180.98	[7.125]	200.03	[7.875]	192.6	[7.58]	387100220	387100820	387101420
21	221.6	[8.71]	190.50	[7.500]	209.55	[8.250]	202.1	[7.96]	387100221	387100821	387101421
22	230.7	[9.08]	200.03	[7.875]	219.08	[8.625]	211.6	[8.33]	387100222	387100822	387101422
23	240.2	[9.46]	209.55	[8.250]	228.60	[9.000]	221.6	[8.71]	387100223	387100823	387101423
24	249.7	[9.83]	219.08	[8.625]	238.13	[9.375]	230.7	[9.08]	387100224	387100824	387101424
25	259.2	[10.21]	228.60	[9.000]	247.65	[9.750]	240.2	[9.46]	387100225	387100825	387101425
26	268.8	[10.58]	238.13	[9.375]	257.18	[10.125]	249.7	[9.83]	387100226	387100826	387101426

TOLERANCES			
MM	TOL	INCH	TOL
0-6	±0.25	0-.24	±.010
>6-30	±0.40	.24-1.18	±.016
>30-120	±0.50	1.18-4.76	±.020
>120	±0.80	>4.76	±.031

FUNCTIONAL SYMBOLS
E/A = 0
E/C = 0
E/P = 0
DIVISIONAL SYMBOLS

THIS DRAWING CONTAINS INFORMATION THAT IS PROPRIETARY TO MOLEX ELECTRONIC TECHNOLOGIES, LLC AND SHOULD NOT BE USED WITHOUT WRITTEN PERMISSION

DIMENSION UNITS: MM/INCH
SCALE: 2:1

GENERAL TOLERANCES (UNLESS SPECIFIED)

	MM	INCH
4 PLACES	± ---	± ---
3 PLACES	± ---	± SEE CHART
2 PLACES	± SEE CHART	± SEE CHART
1 PLACE	± SEE CHART	± ---
0 PLACES	± ---	± ---
ANGULAR TOL	± ---	

DRAFT WHERE APPLICABLE MUST REMAIN WITHIN DIMENSIONS

CURRENT REV DESC: MIGRATED TO ECTR/NX.
ADDED ITEM-3. UPDATED PART NUMBER TABLE

EC NO: 744321
DRWN: ABENJAMINLW 2022/04/12
CHK'D: DACHAMMER 2023/03/29
APPR: JFMURPHY 2023/08/23

INITIAL REVISION:
DRWN: SVMURTHY 2015/06/30
APPR: JFMURPHY 2016/07/11

THIRD ANGLE PROJECTION

DRAWING: B-SIZE
SERIES: 38710

molex

9.53MM [.375"] SR BTS
NO TERMINAL, MTG ENDS

PRODUCT CUSTOMER DRAWING

DOCUMENT NUMBER	DOC TYPE	DOC PART	REVISION
SD-38710-0202	PSD	001	A1

MATERIAL NUMBER	CUSTOMER	SHEET NUMBER
SEE CHART	GENERAL MARKET	2 OF 2

DOCUMENT STATUS	P1	RELEASE DATE	2023/08/23 16:23:49

FORMAT: Eng-lega-master-tb-prod-B
REVISION: E1
DATE: 2021/05/01