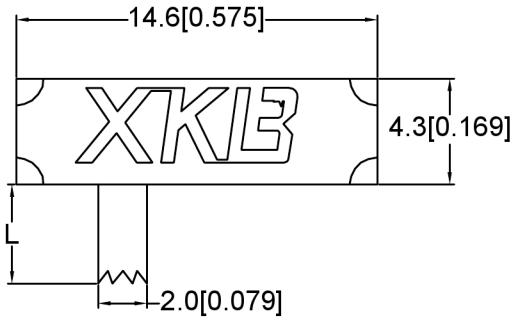

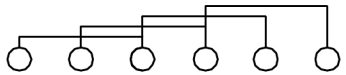

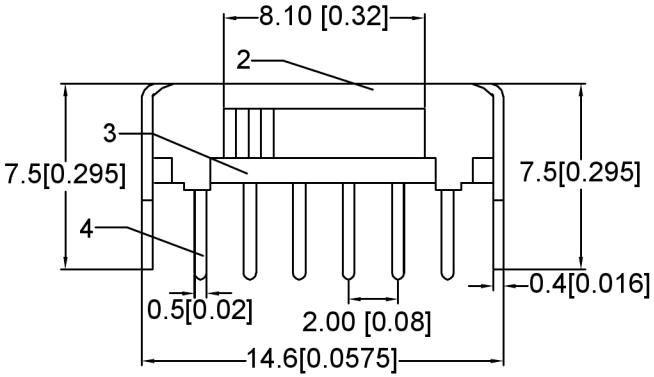

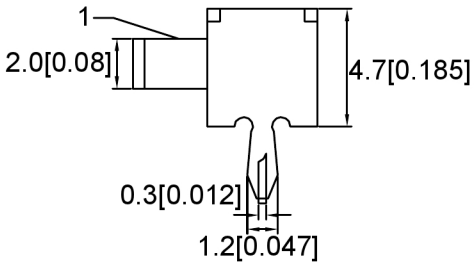

SK14D07- X - X

L(mm)
2~12

Colour
B:Black
R:Red

		—				—
		—				—
		—				—
④	Terminal	—	6	Brass（0.30t）	ag Plated	—
③	Base	—	1	Phenolic Resin		—
②	Cover	—	1	Sus	Natural	—
①	Keystake	—	1	Pa66	Black	—
ITEM	PAPT NAME	TER,NO	QTY	MATERIAL	FINISHING	REMARK

RATING	0.3A 50V DC
CIRCUIT	1P2T
CONTACT RESISTANCE	100mΩ MAX
TRAVEL	2mm
OPERATING FORCE	250±100gf
OPERATING LIFE(CYCLES)	10,000

广东星坤科技股份有限公司
文件工程章

MARK	DESCRIPTION	DATE	REVISED	APPROVED
Δx				
Δx				
Δx				

REVISIONS

www.helloxkb.com www.helloxkb.cn www.xk-dg.cn

UNSPECIFIED TOLERANCES	
ANGLAR	±5°
L≤ 4	±0.2
4<L≤ 16	±0.3
16<L≤ 63	±0.4
L> 63	±0.5

XKB INDUSTRIAL PRECISION CO.,LIMITED

DSND		SCALE: N/A	MODEL TYPE: SLIDE SWITCH
DWN		VIEW:	PART NO.: SK14D07
CHKD		UNIT: mm/in	DWG NO.:
APPD		SIZE: A4	

WEIGHT	SHEET	REVISIC
	1/1	A0