SAMZO | REAC/ROHS

REV	ECN NO	DESRIPTION	DESIGN	APPROVAL	DATE
A1	NEW	Replace frame			2018.06.12

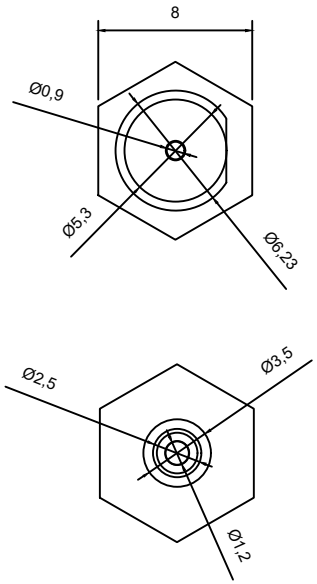

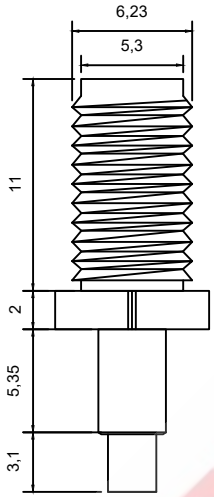

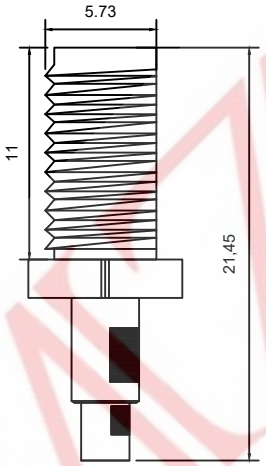

technical parameters
→.Impedance: 50Ω
→.Frequency range: 0 - 12.4G
→.Voltage standing wave ratio: For straight flexible cable, less than 1.15±0.02f (GHz)
→.Operating voltage: 335V max
→.Dielectric withstand voltage: 1000Vrms
→.Contact resistance: Inner conductor less than 3 mOhm, outer conductor less than 2 mOhm
→.Insulation resistance: greater than 500 MΩ
→.Durability: 500 times
→.Operating temperature: -65 to +165 (For PE CABLE, -40 to +85)
→Standards: MIL-C-39012, IEC169-15, CECC22110

SMA-KY-214-L0-1

- Surface treatment镀层:镀金1miu
- Pin position脚位:L0-立式
- Length体长:21.45mm
- Product number编号:KY
- Product series系列:SMA同轴射频天线座

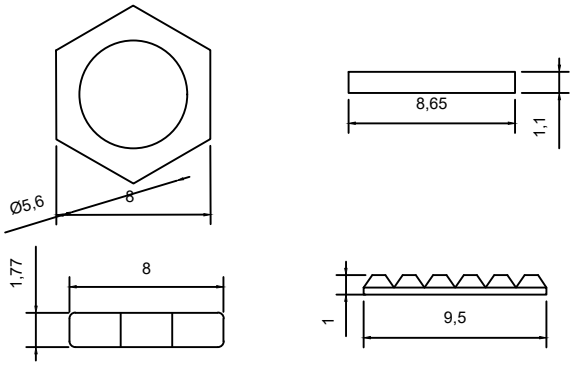

螺母垫片配件

ITEM	DESCRIPTION	MATERIAL	QTY	FINSH/COLOR					
C	插孔	HPB59-1	1	------				GENERAL TOLERANCE	
B	绝缘体	聚四氟乙烯	1	------				⩾0~2<	±0.15
A	主体	黄铜	1	镀金	DESIGN	WANGGUIFA	2018.06.12	⩾2~5<	±0.25
					CHECKED	ZHENGUILAN	2018.06.12	⩾0~2<	±0.15
					APPROVED	LILIANJIANG	2018.06.14	⩾5	±0.35

FIRST VIEW

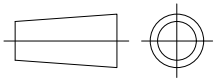

SCALE 1:1 UNIT mm

The copyright belongs to samzo parts [China] Co., Ltd. please use the material after samzo parts agree to authorize. The final right of interpretation belongs to samzo parts.
WWW.KKK-JP.COM

SAMZO COMPONENTS
Electronic switch and connector manufacturer

TITLE:: SMA-KY21.45 立式
DWG NO：SMAKY21-P001
PART NO：SMAKY-20220315
MODEL NO：SMA-KY-214-L0-1
NAME： SMA COAXIAL RF CONNECTOR