THIS DRAWING IS UNPUBLISHED. RELEASED FOR PUBLICATION 20
© COPYRIGHT 20 BY - ALL RIGHTS RESERVED.

LOC	DIST
DF	A5

REVISIONS

P	LTR	DESCRIPTION	DATE	DWN	APVD
	A	RELEASED PER ECO 13-015938	10-24-13	CT	DE

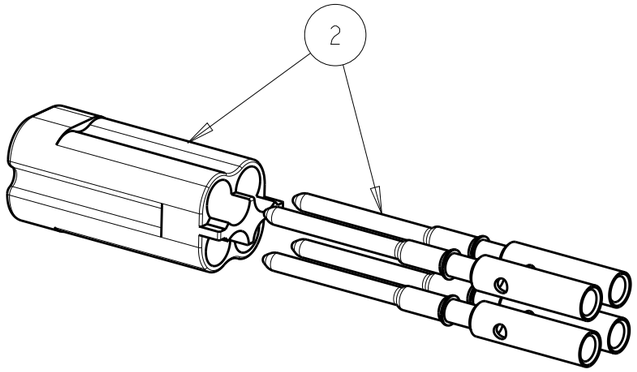

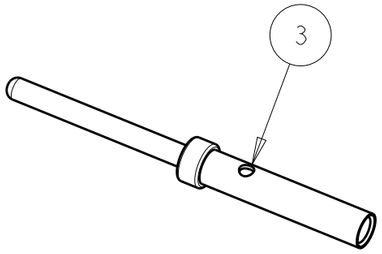

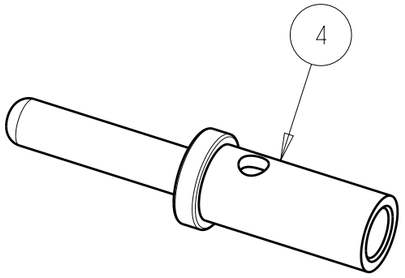

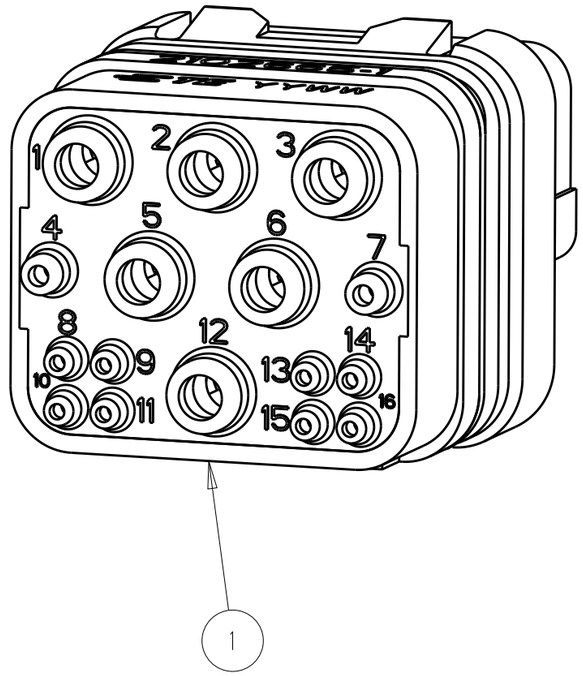

1. ALL PARTS SHALL BE KIT PACKAGED.
2. PACKAGING TO BE MARKED WITH TE CONNECTIVITY LOGO, PART NUMBER, REVISION & DATE CODE.

QTY -2	QTY -1	PART NO	DESCRIPTION	ITEM NO
--	6	1577869-1	CONTACT, PIN, SIZE 16	4
--	2	204370-2	CONTACT, PIN, SIZE 22	3
2	2	2102667-1	KIT, PIN DATA DART	2
1	1	2102665-1	ASSEMBLY, PIN INSERT	1

THIS DRAWING IS A CONTROLLED DOCUMENT.

DIMENSIONS: mm

TOLERANCES UNLESS OTHERWISE SPECIFIED:
0 PLC ±-
1 PLC ±-
2 PLC ±-
3 PLC ±-
4 PLC ±-
ANGLES ±-

MATERIAL -
FINISH -

DWN G DOUTY 27FEB2012
CHK R WALTER 27FEB2012
APVD R WALTER 27FEB2012
PRODUCT SPEC 108-2470
APPLICATION SPEC 114-32031
WEIGHT -

TE Connectivity

NAME
PIN CONTACT SIZE 16
EN3155-008-1616
ARINC 800 SINGLE MODULE

SIZE	CAGE CODE	DRAWING NO	RESTRICTED TO
A3	00779	C-2102659	-

Customer Drawing | SCALE 5:1 | SHEET 1 OF 1 | REV A

1470-19 (3/11)