Jul.1.2024 Copyright 2024 HIROSE ELECTRIC CO., LTD. All Rights Reserved.
In case of consideration for using Automotive equipment / device which demand high reliability, kindly contact our sales window correspondents.

	COUNT	DESCRIPTION OF REVISIONS	BY	CHKD	DATE		COUNT	DESCRIPTION OF REVISIONS	BY	CHKD	DATE
△					. .	△					. .
△					. .	△					. .
△					. .	△					. .

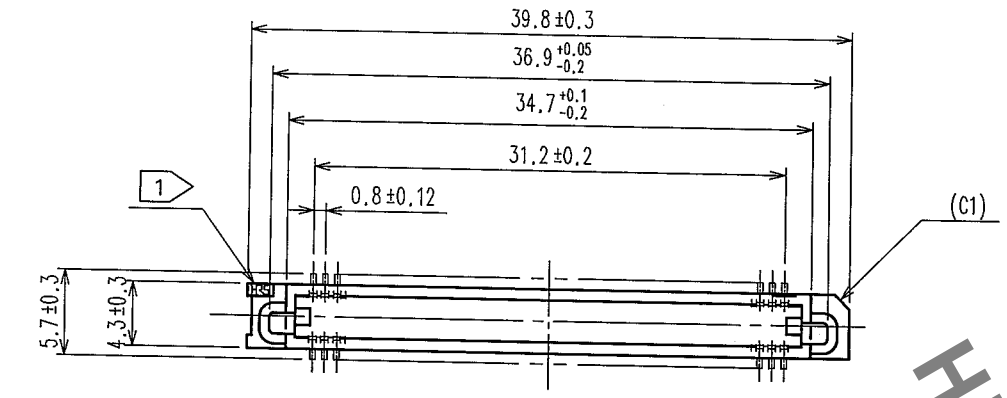

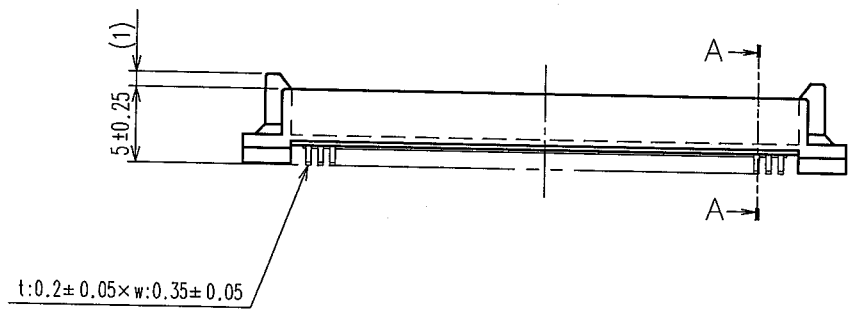

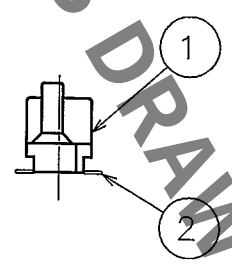

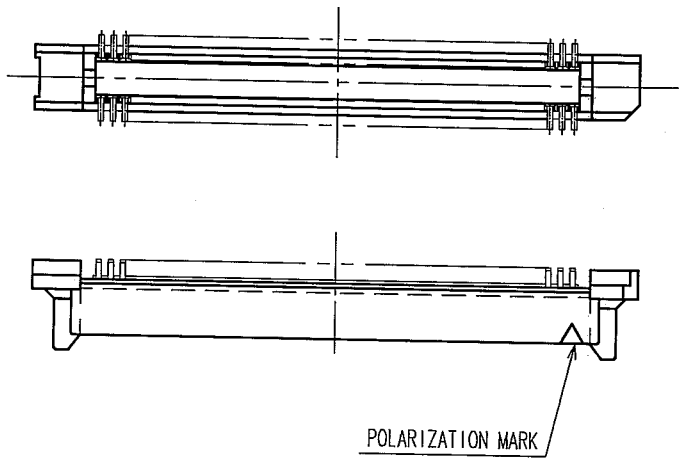

A-A(10:1)

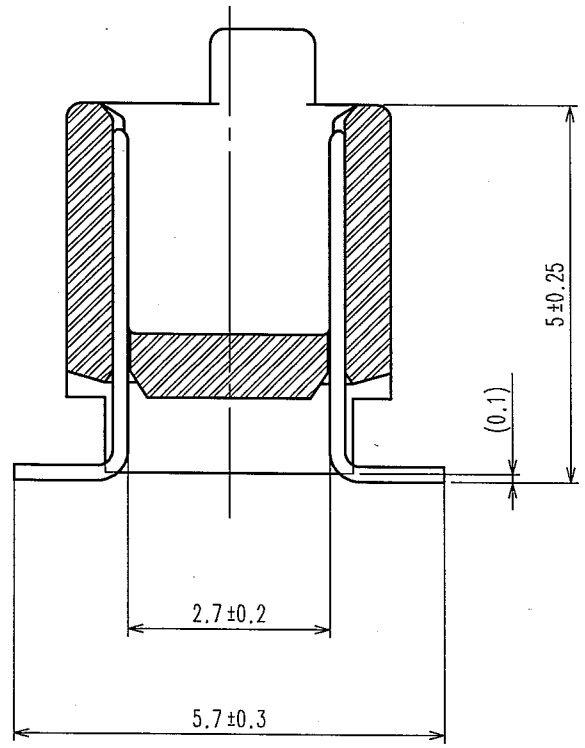

NOTE 1 HRS MARK SHALL BE OPTIONAL.
2 LEAD CO-PLANARITY SHALL BE 0.1mm MAX.
3 THE DIMENSIONS IN PARENTHESES ARE FOR REFERENCE.
4 EMBOSSED CARRIER TAPE PACKAGING SHALL BE APPLIED FOR THIS PRODUCT.
5 FOR MODIFICATION,ETC,PREVENTIVE HOLE FOR SINK MARK MAY BE ADDED ACCORDING TO CIRCUMSTANCES.

RECOMMENDED P.C.B. LAND PATTERN (MOUNT SIDE)

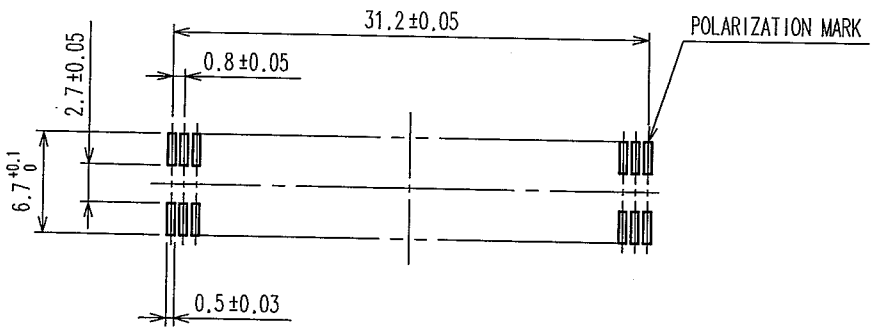

HRS DRAWING FOR REFERENCE

NO.	MATERIAL	FINISH, REMARKS
1	POLYPHENYLENE SULFIDE	LIGHT BROWN UL94V-0
2	PHOSPHOR BRONZE	CONTACT AREA : GOLD 0.1μm min. LEAD AREA : TIN-PLATING 1μm min. UNDER PLATING : NICKEL 1μm min.

CODE NO.(OLD)	DRAWN	DESIGNED	CHECKED	APPROVED	RELEASED
CL	Y.AOYAGI '05.09.15	J.Moda '05.09.26	K.Ogawa '05.09.26	H.Okawa '05.09.26	. .

SCALE	DRAWING NO.	PART NO.
2 : 1	EDC3-071330-22	FX6A-80P-0.8SV1(92)
UNITS mm	HRS HIROSE ELECTRIC CO., LTD	CODE NO. CL576-0227-6-92 1/2

TO

Jul.1.2024 Copyright 2024 HIROSE ELECTRIC CO., LTD. All Rights Reserved.
In case of consideration for using Automotive equipment / device which demand high reliability, kindly contact our sales window correspondents.

	COUNT	DESCRIPTION OF REVISIONS	BY	CHKD	DATE		COUNT	DESCRIPTION OF REVISIONS	BY	CHKD	DATE
△					. .	△					. .
△					. .	△					. .
△					. .	△					. .

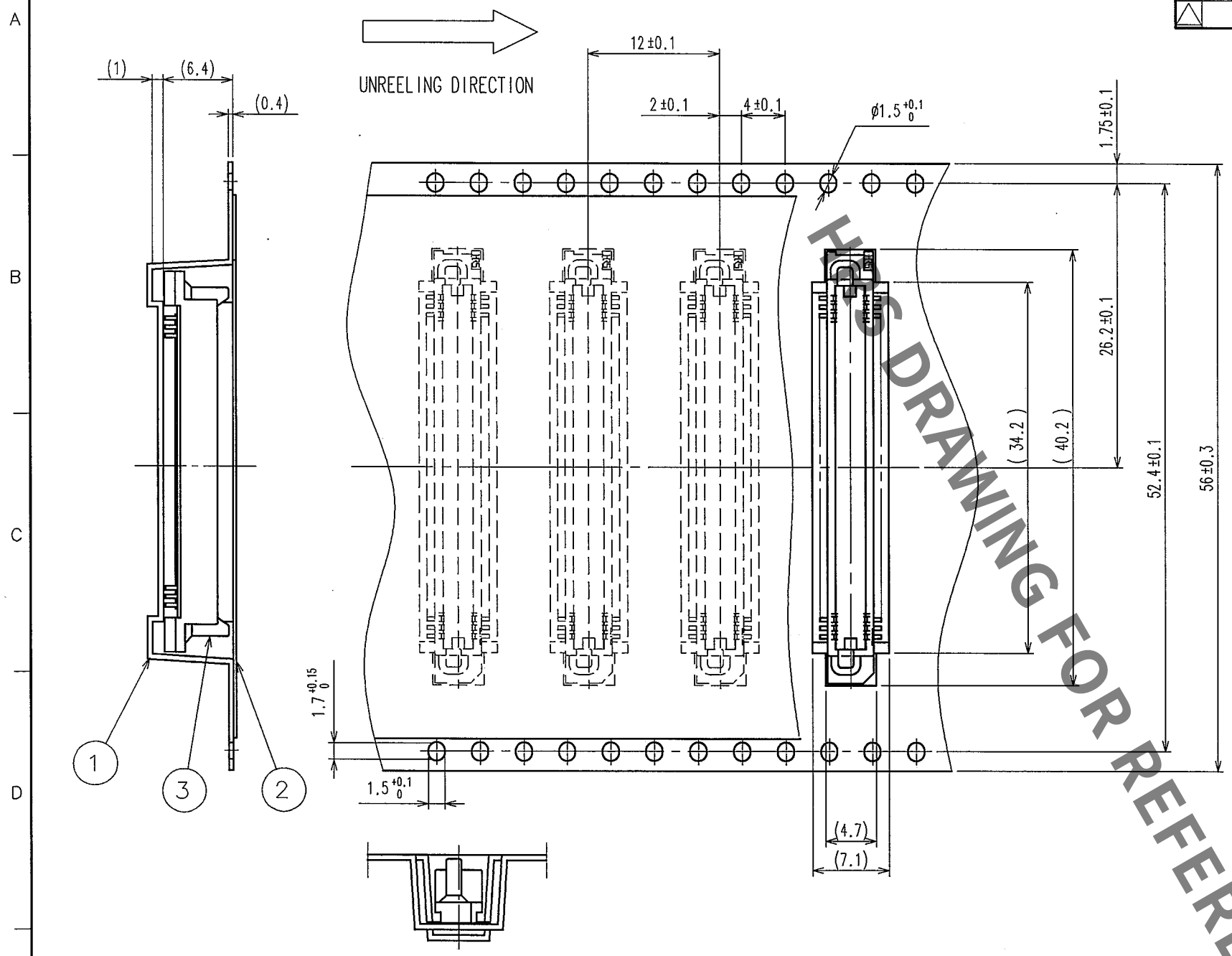

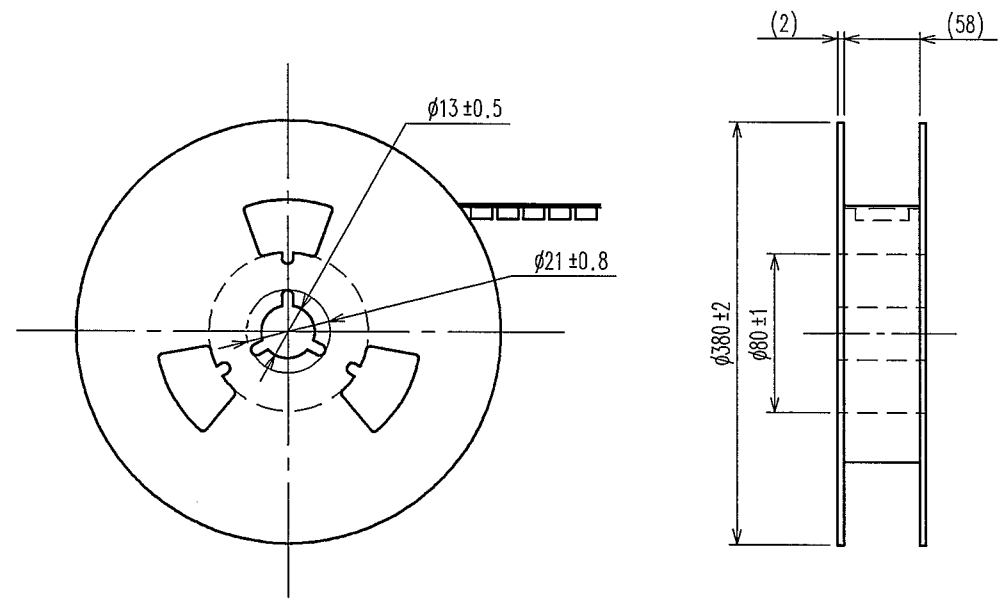

REEL DIMENSION (FREE)

NOTE 1 THE DIMENSIONS IN PARENTHESES ARE FOR REFERENCE.
2 1 REEL : 1000 CONNECTORS

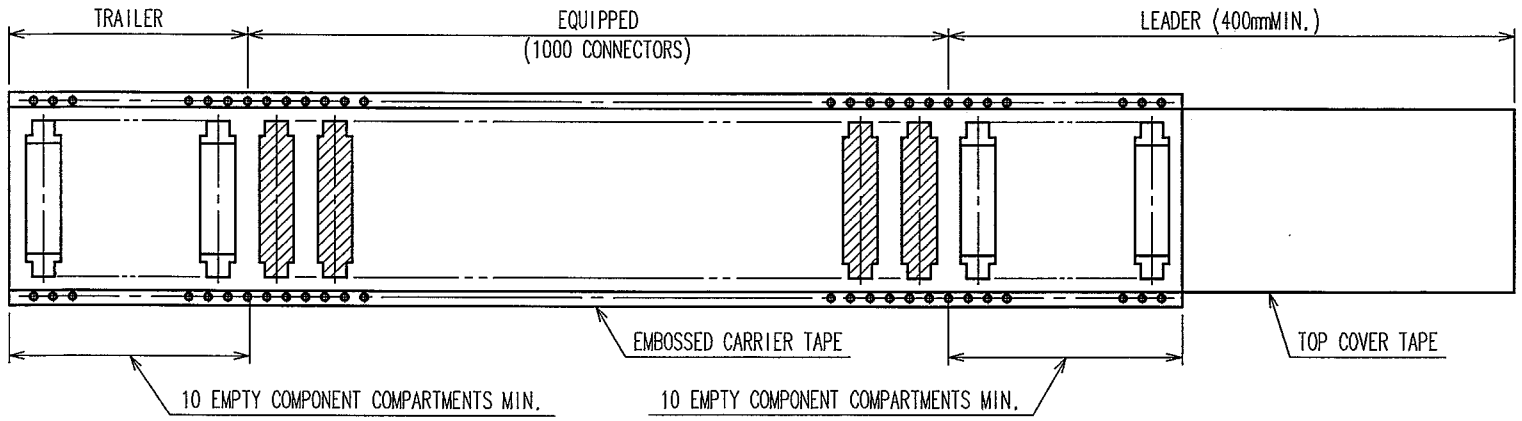

HRS DRAWING FOR REFERENCE

NO.	MATERIAL	FINISH, REMARKS	NO.	MATERIAL	FINISH, REMARKS
2	POLYESTER	TOP COVER TAPE			
1	POLYSTYRENE	EMBOSSED CARRIER TAPE	3		(CONNECTOR)

CODE NO.(OLD)	DRAWN	DESIGNED	CHECKED	APPROVED	RELEASED
CL	Y.AOYAGI '05.09.15	J.Noda '05.09.26	K.Ogawa '05.09.26	H.Okawa '05.09.26	. .

SCALE 2 : 1
UNITS mm

DRAWING NO. EDC3-71330-22

HIROSE ELECTRIC CO., LTD

PART NO. FX6A-80P-0.8SV1(92)

CODE NO. CL576-0227-6-92 2

TO