PART NO.	ENG. NO.	FINISHED LENGTH
1300500335	ENS2115M006	0.6M [2 FT]
1300500336	ENS2115M010	1M [3 FT 3 IN]
1300500341	ENS2115M050	5M [16 FT 5 IN]
1300500346	ENS2115M100	10M [32 FT 10 IN]

CABLE LENGTH TOLERANCES
<.3M [1FT]: +19mm-0 [+.75in-0]
.3 - .9M [1 - 3FT]: +44.5mm-0 [+1.75in-0]
.9 - 1.8M [3 - 6FT]: +55.6mm-0 [+2.19in-0]
1.8 - 3.7M [6 - 12FT: +88.9mm-0 [+3.50in-0]
3.7 - 7.3M [12 - 24FT]: +165.1mm-0 [+6.50in-0]
7.3-14.6M [24 - 48FT]: +317.5mm-0 [+12.50in-0]
14.6 - 30.5M [48-100FT]: +622.3mm-0 [+24.50in-0]
OVER 30M [100FT] +2% OF FINISHED LENGTH

PART NUMBER LEGEND

ENS2115M006

LENGTH
M001 = .1 METERS
M010 = 1.0 METERS
M100 = 10 METERS

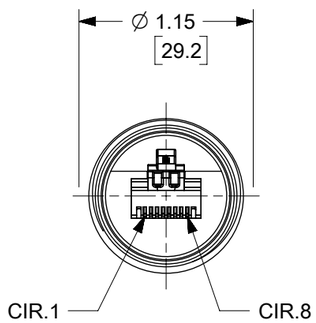

RJ45 PLUG FACE VIEW
TYP. BOTH ENDS

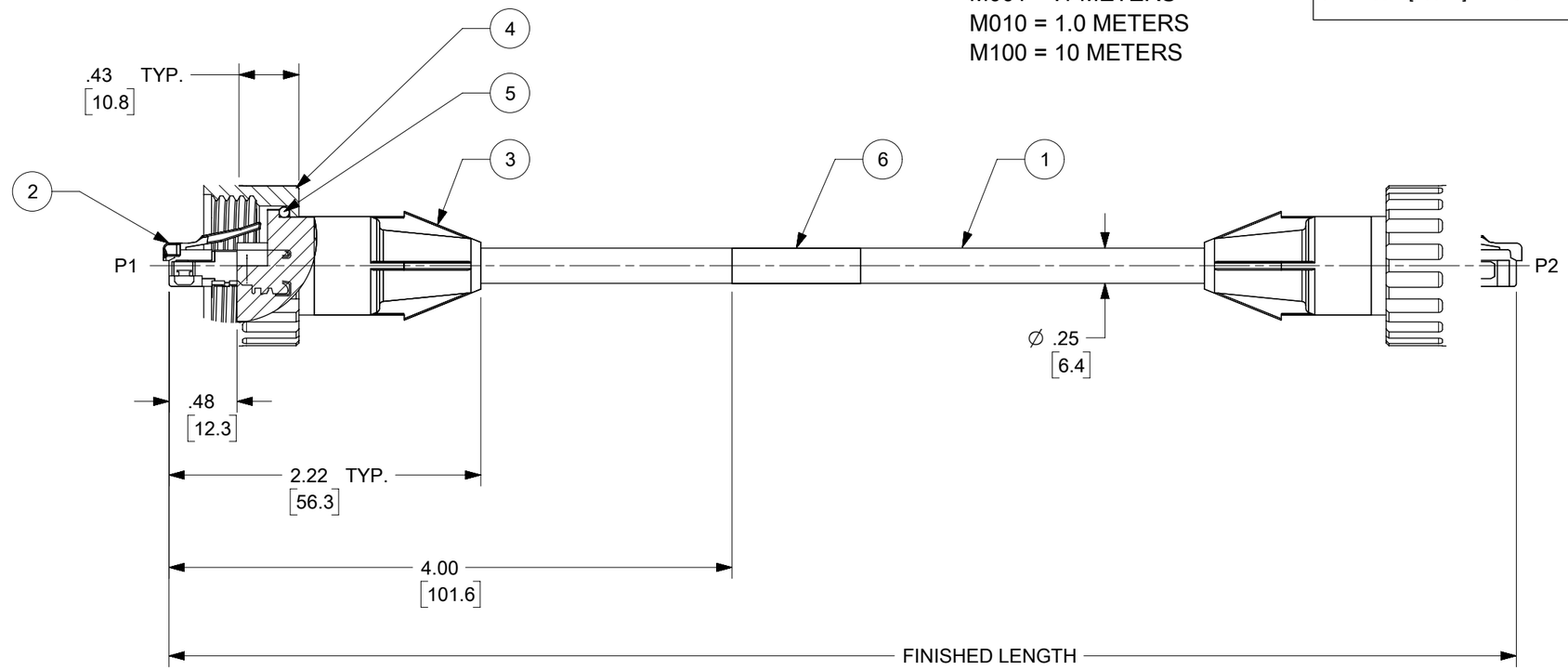

NOTES:
1. MATERIAL: AS NOTED
2. FINISH: AS NOTED
3. ELECTRICAL:
   VOLTAGE: 125V DC
   CURRENT: 1.5A
4. TEMP RATING: -20°TO +75°C
5. PROTECTION: IP67 (WHEN MATED)
6. COUPLING THREAD: 1-14 UNS
7. ALL DIMS ARE FOR REFERENCE UNLESS TOLERANCED OR NOTED OTHERWISE

568-A WIRE DIAGRAM

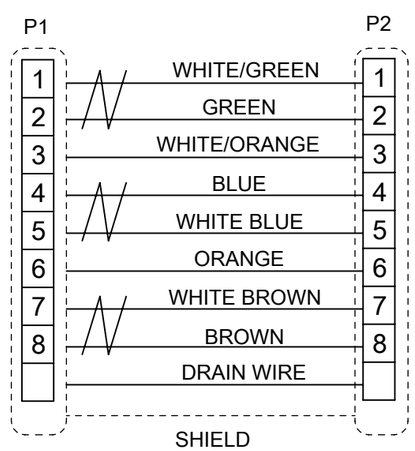

ITEM	DESCRIPTION	MATERIAL	FINISH
6	WRAP LABEL	VINYL	BLACK/YELLOW
5	O-RING	VITON	BROWN
4	COUPLING NUT	ABS	BLACK
3	OVERMOLD	PUR	BLACK
2	RJ45 PLUG	PC/Cu ALLOY	CLEAR/GOLD PLATED
1	CABLE, 24AWG, 4PR, CAT5E	PUR	BLACK

DOCUMENT STATUS	P1	RELEASE DATE	2024/05/07 20:14:26

FORMAT: IN-master-general
REVISION: D
DATE: 2020/01/14

THIS DRAWING CONTAINS INFORMATION THAT IS PROPRIETARY TO MOLEX ELECTRONIC TECHNOLOGIES, LLC AND SHOULD NOT BE USED WITHOUT WRITTEN PERMISSION

FUNCTIONAL SYMBOLS
FA = 0
FC = 0
FP = 0
DIVISIONAL SYMBOLS

DIMENSION UNITS: INCH
SCALE: 1:1

GENERAL TOLERANCES (UNLESS SPECIFIED)

	MM	INCH
4 PLACES	±	±
3 PLACES	±	±
2 PLACES	±	±
1 PLACE	±	±
0 PLACES	±	±
ANGULAR TOL	±	°

DRAFT WHERE APPLICABLE MUST REMAIN WITHIN DIMENSIONS

CURRENT REV DESC: UPDATED THE CABLE TOLERANCE TABLE

EC NO:	785430	
DRWN:	VBASUTHKARP	2024/05/03
CHK'D:	PDODDAMANEMY	2024/05/07
APPR:	BWOODMAN	2024/05/07

INITIAL REVISION:
DRWN:
APPR:

molex

RJ-LYNX MALE PUG CABLE ASSY
568-A ETHERNET, 24AWG SHIELDED

PRODUCT CUSTOMER DRAWING

DOCUMENT NUMBER	DOC TYPE	DOC PART	REVISION
1300500010	PSD	000	A1

THIRD ANGLE PROJECTION	DRAWING	SERIES	MATERIAL NUMBER	CUSTOMER	SHEET NUMBER
	B-SIZE	130050	SEE P/N MATRIX	GENERAL MARKET	1 OF 1