REVISIONS					
REV.	ECN NO.	LOCATION	DESCRIPTION	DATE	DESIGN
A0	N/A		INITIAL RELEASE	/	/
A1	N/A		图面升级整理图面	2024.12.9	阿树

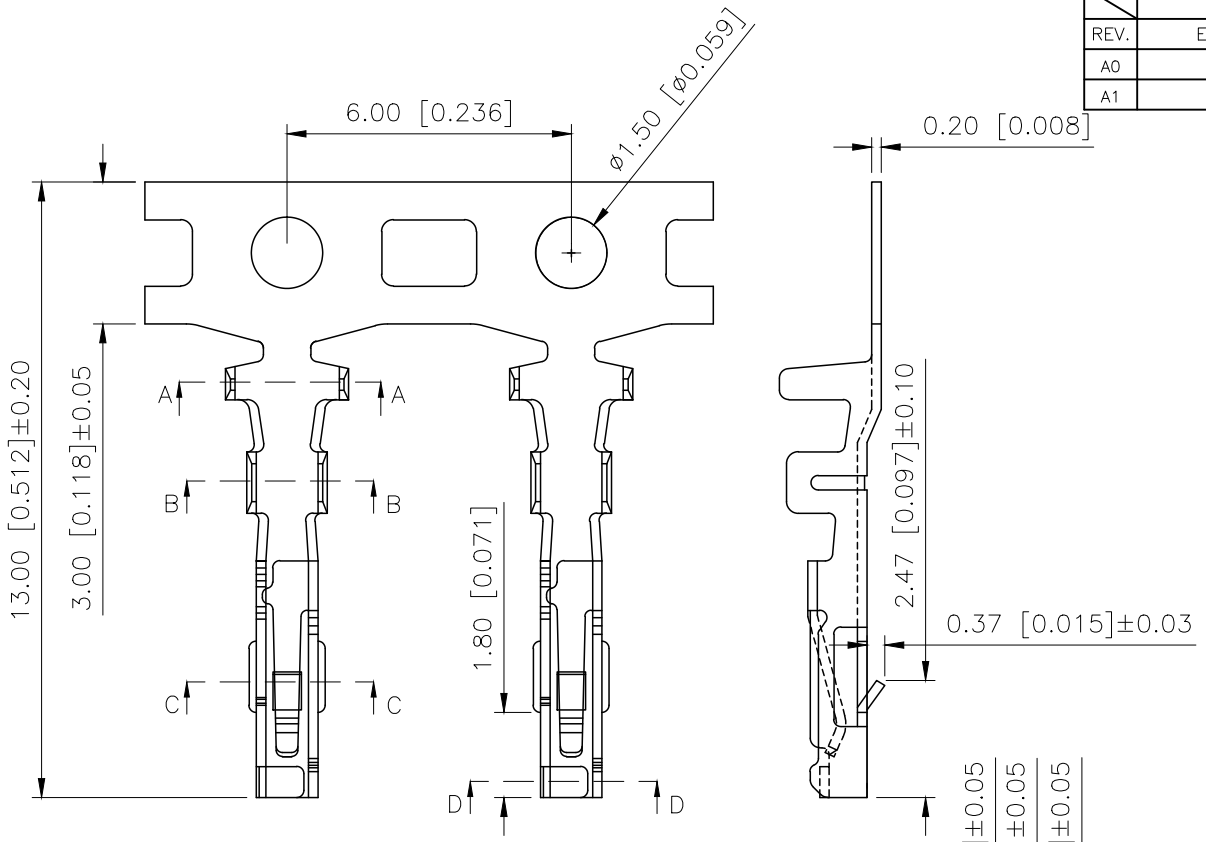

Specifications:
规格：
Voltage rating:125V AC/DC
额定电压：125V AC/DC
Current rating:2A AC/DC
额定电流：2A AC/DC
Withstanding voltage:500V AC/minute
耐受电压：500V AC/分钟
Temperature range:−40℃−+125℃
温度范围：−40℃−+125℃
Insulation resistance:≥1000MΩ
绝缘电阻：≥1000MΩ
Contact resistance:≤20mΩ
接触电阻：≤20mΩ
After environmental testing:≤30mΩ
环境测试后：≤30兆欧

PART NO.:

X2081 T−P XX
① ② ③ ④

①Series No
②Category:T−Terminal
③Material:P−Phosphor Bronze
④Plating style:SN−Bright tin plating;
V01−Gold Flash

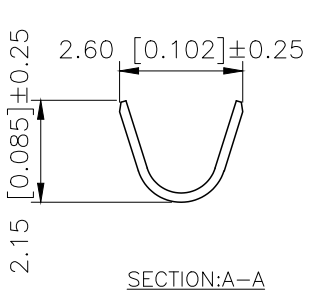

SECTION:A−A
SCALE:1:1

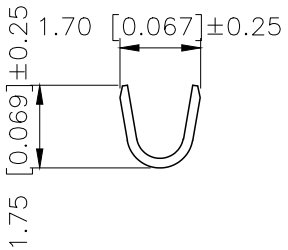

SECTION:B−B
SCALE:1:1

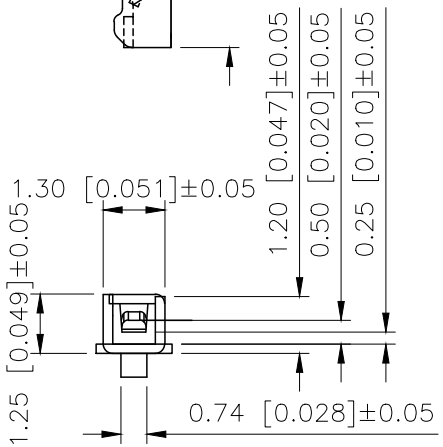

SECTION:C−C
SCALE:1:1

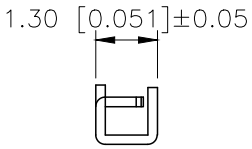

SECTION:D−D
SCALE:1:1

PART NO	Material	Wire Range	Insulation OD	Finish	Suitable XKB Terminal
X2081T−PSN	phosphor Bronze	AWG#22−28	1.4mm(Max)	15u''Ni;70u'' Sn	X2081H

AuGLAR	±5°
X.	±0.40
X.x	±0.30
X.xx	±0.20
X.xxx	±0.15
UNSPECIFIED TOLERAuCES	

XKB Connection 星创

DESIGN	阿树	VIEW:	MODEL TYPE: 2.0mm Crimp Style Connector
CHECKED		UNIT: mm/in	PART NO.: X2081T−PSN
APPROVED		SIZE: A4	DWG NO.:

XKB INDUSTRIAL PRECISION CO.,LIMITED

SCALE	PAGE	REVISION
N/A	1/1	A1