MAPX	MODIFICATION	DATE

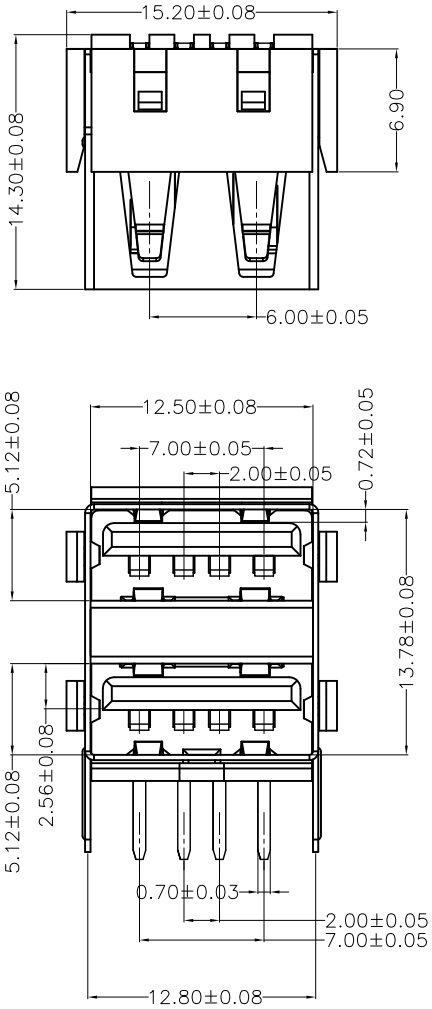

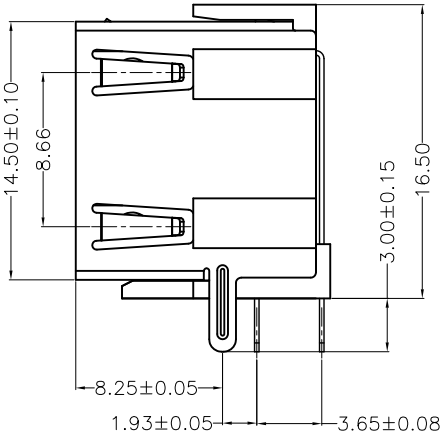

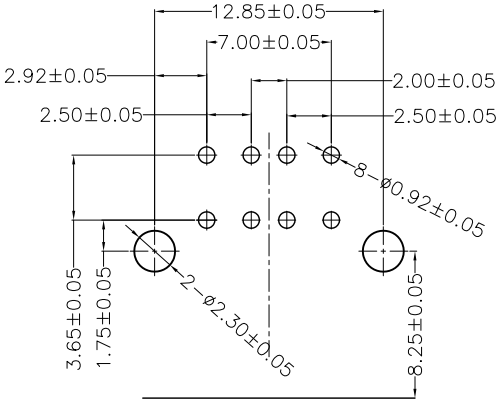

PCB Layout

NOTES:

1. HOUSING: SEE NOTES, UL94V-0 .
   TERMINAL: SEE NOTES.
   SHELL: SEE NOTES.

SPECIFICATION:

1. ELECTRICAL CHARACTERISTIC:
   CONTACT RESISTANCE: 30MΩ MAX
   DIELECTRIC WITHSTANDING VOLTAGE: 500V AC FOR 1MIN
   INSULATION RESISTANCE: 1000MΩ MIN
2. MECHANICAL CHARACTERISTIC:
   INSERTION FORCE: 35N(3.57KGF) MAX
   EXTRACTION FORCE: 10~35N(1.02~3.57KGF)MIN
3. Contact finish:
   01:Selective Gold Flash
   02:Selective Gold 3U″
   03:Selective Gold 5U″
   04:Selective Gold 15U″
   05:Selective Gold 30U″

产品图 PRODUCT CHART DWG				深圳市精拓金电子有限公司						
公差一览表 TOLERANCE UNLESS OTHERMSE				单位 UNITS	MM	制图 DRAWING	Z-Y-B	制图料号 PRODUCT PART NO.	907-222A1021D10201	
X	±0.15	X	±5.°	比例 SCALE	1:1	审核 CHKD		产品名称 PRODUCT NO.	AF90度14.5双层短体直脚无边铜壳 PBT黑胶脚和端子3.0（脚4.0长）	
.X	±0.10	.X	±2.°							
.XX	±0.05	.XX	±1.°	日期 DATE	2010.05.06	核准 APPD		角法 VIEW		版本 VER A0
.XXX	±0.03	.XXX	±0.5°							