REV.	ECN NO.	DATE	SIGN	DESCRIPTION
B	LEN1480610	2014/08/12	Rita	Update Logo
C	C210561	2021/04/08	Vicky	△C X4

△C 12P-XXBMIA-SL8001

XX: No. Of Pin

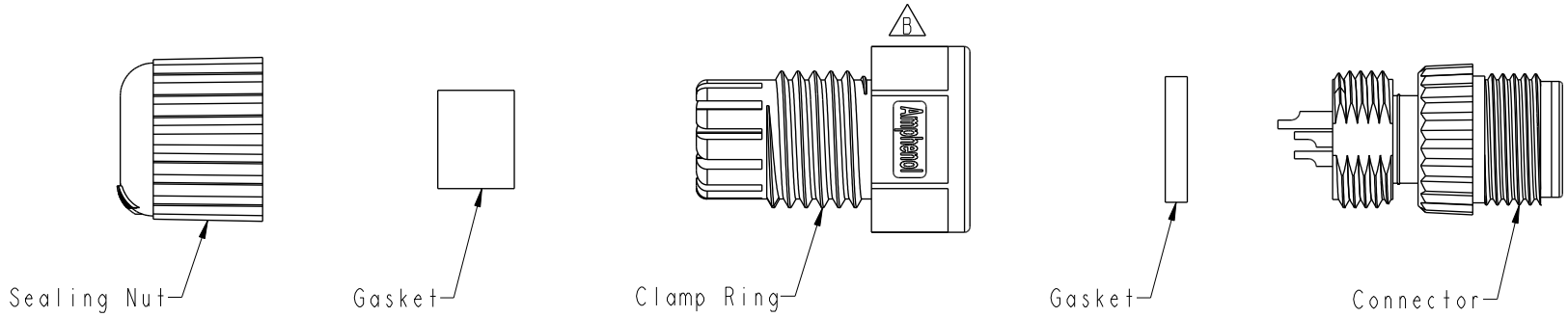

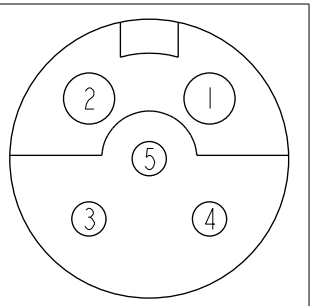

5P

Pin Assignments
Front View

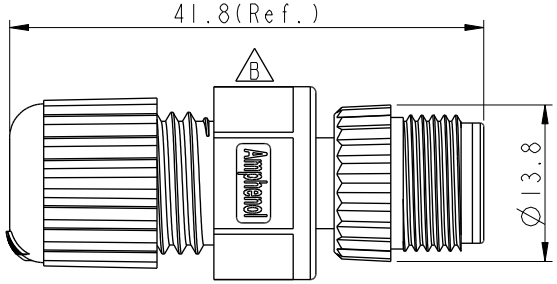

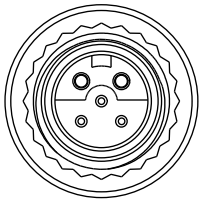

△C Note:
* RoHS Compliant
* (QC) Important Dimension
* Waterproof rate: IPX8, mated 1m/24h
* Connector
  Housing: Thermoplastic, Black
  Pin: Copper alloy, Gold plated
  Extension Nut: Thermoplastic, Black
  Nut: Thermoplastic, Black
* Gasket: Rubber, Black
* Clamp Ring: Thermoplastic, Black
* Sealing Nut: Thermoplastic, Black
* Seal: Rubber, Black, OD:Ø4.5mm~Ø6.5mm
* One set unassembled in one pe bag

UNIT: mm

TOLERANCE
.X ±0.25
.XX ±0.1
.XXX ±0.05
ANGLES ±1°

TITLE: O SEN, M12 A -PLASTIC(1) CABLE W/O SR, M, 1, F1 SOLDER △C

SCALE	SIZE	SHEET
3:2	A4	1 OF 1
REV. C	WC-REV. A.4	(QC): Inspection item

Amphenol LTW
安費諾亮泰企業股份有限公司

ITEM NO	DRAWN BY	DATE
	Rita	2014-08-12
DWG NO △C 12P-XXBMIA-SL8001	CHECKED BY Kris	DATE 2014-08-12
CUSTOMER ALTW	APPROVED BY Wenmao	DATE 2014-08-12

THIS DOCUMENT IS SUBJECT TO CHANGE WITHOUT NOTICE. IT IS CONFIDENTIAL AND A PROPERTY OF Amphenol LTW. DISCLOSURE TO THIRD PARTY HAS TO BE AUTHORIZED BY Amphenol LTW.