REV.	ECN NO.	DATE	SIGN	DESCRIPTION
A		2020/01/20	Vicky	Initial Released
B	C220468	2022/03/25	Vicky	△B X2

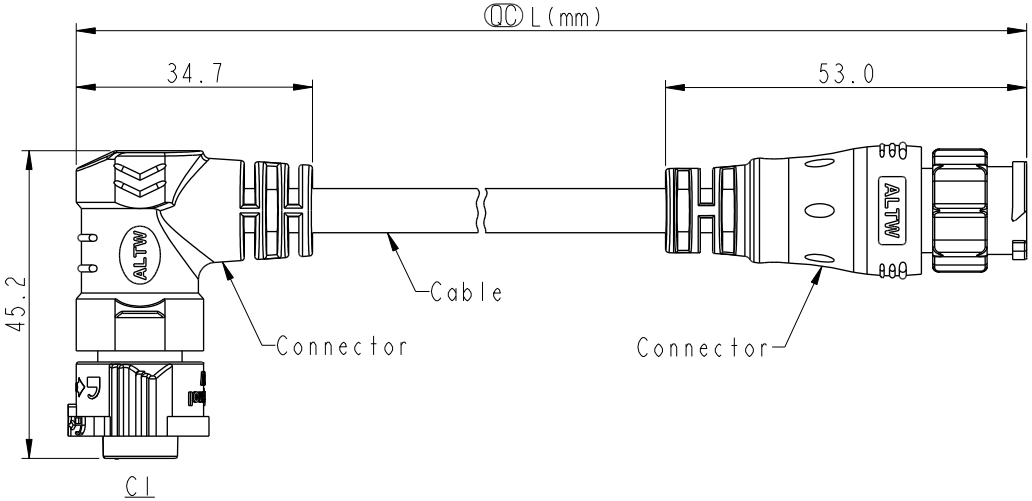

C1

C2

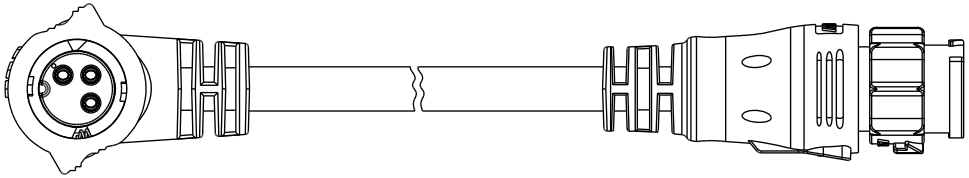

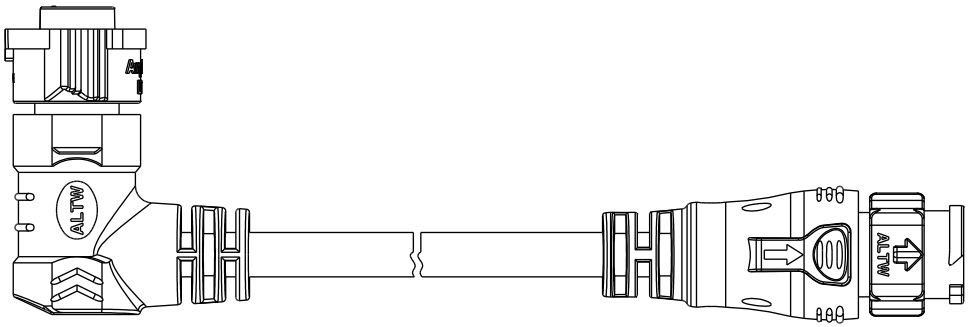

△B Note:
* RoHS Compliant
* QC Important dimension
* C1
  Waterproof rate: IPX8, mated 1m/24h
  Housing: Thermoplastic, Black
  Pin: Copper alloy, Gold plated
  O-Ring: Rubber, Dark gray
  Nut: Thermoplastic, Black
  Outer Mold: Thermoplastic, Black
* C2
  Waterproof rate: IPX8, mated 1m/24h
  Housing: Thermoplastic, Black
  Pin: Copper alloy, Gold plated
  Outer Mold: Thermoplastic, Black
* Cable: UL21388, PVC Jacket, Black
* Cable length tolerance: 0.5M < L ≤ 1M: +60/-0 mm
  1M < L ≤ 3M: +120/-0 mm
  3M < L ≤ 5M: +160/-0 mm
  5M < L ≤ 10M: ±100 mm
  10M < L ≤ 20M: ±200 mm
  20M < L ≤ 30M: ±300 mm
  30M < L ≤ 99M: ±500 mm

UNIT: mm	TITLE: ACC, XLOK, B-10A, DB-ENDED FM	Amphenol LTW 安費諾亮泰企業股份有限公司	ITEM NO	DRAWN BY: Vicky	DATE: 2020-01-20
TOLERANCE ±0.5mm	SCALE 1:2 / SIZE A4 / SHEET 1 OF 2		DWG NO: AB-BBXXFR-BBHL-QDXXX	CHECKED BY: Rita	DATE: 2020-01-20
	REV. B / WC-REV. A.5	QC: Inspection item	CUSTOMER: ALTW	APPROVED BY: Max	DATE: 2020-01-20

W10814-03-[illegible]01A2

THIS DOCUMENT IS SUBJECT TO CHANGE WITHOUT NOTICE. IT IS CONFIDENTIAL AND A PROPERTY OF Amphenol LTW. DISCLOSURE TO THIRD PARTY HAS TO BE AUTHORIZED BY Amphenol LTW.

Contacts	Cable Jacket	Cable OD	AWG	Item No.
3P	PVC	6.5	16	AB-BB03FR-BBHL-QDXXX
2P		6.0		AB-BB02FR-BBHL-QDXXX

AB-BB XX FR-BBHL-QD XXX

B XX: No. Of Pin

XXX: 0.5~99Meters
A05: 0.5 Meter
001: 01 Meter
002: 02 Meters
:
099: 99 Meters

Pin Out	2 Red 紅 1 Black 黑 Pin # Wire	3 Red 紅 2 Brown 棕 1 Black 黑 Pin # Wire
C2	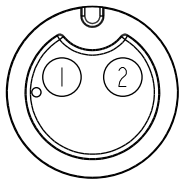 2P	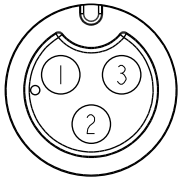 3P
C1	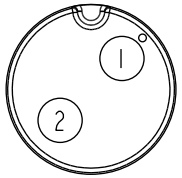 2P	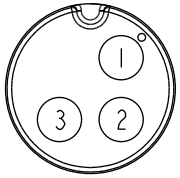 3P

Pin Assignments Front View

UNIT: mm

TOLERANCE ±0.5mm

TITLE ACC, XLOK, B-10A, DB-ENDED FM

SCALE 1:2 | SIZE A4 | SHEET 2 OF 2

REV. B | WC-REV. A.5 | QC: Inspection item

Amphenol LTW
安費諾亮泰企業股份有限公司

ITEM NO	DRAWN BY Vicky	DATE 2020-01-20
DWG NO AB-BBXXFR-BBHL-QDXXX	CHECKED BY Rita	DATE 2020-01-20
CUSTOMER ALTW	APPROVED BY Max	DATE 2020-01-20

W10814-03-RW01A2

THIS DOCUMENT IS SUBJECT TO CHANGE WITHOUT NOTICE. IT IS CONFIDENTIAL AND A PROPERTY OF Amphenol LTW. DISCLOSURE TO THIRD PARTY HAS TO BE AUTHORIZED BY Amphenol LTW.