REV.	ECN NO.	DATE	SIGN	DESCRIPTION
A		2020/01/13	Ruru	Initial Released
B	C220438	2022/03/21	Ruru	(B) X2

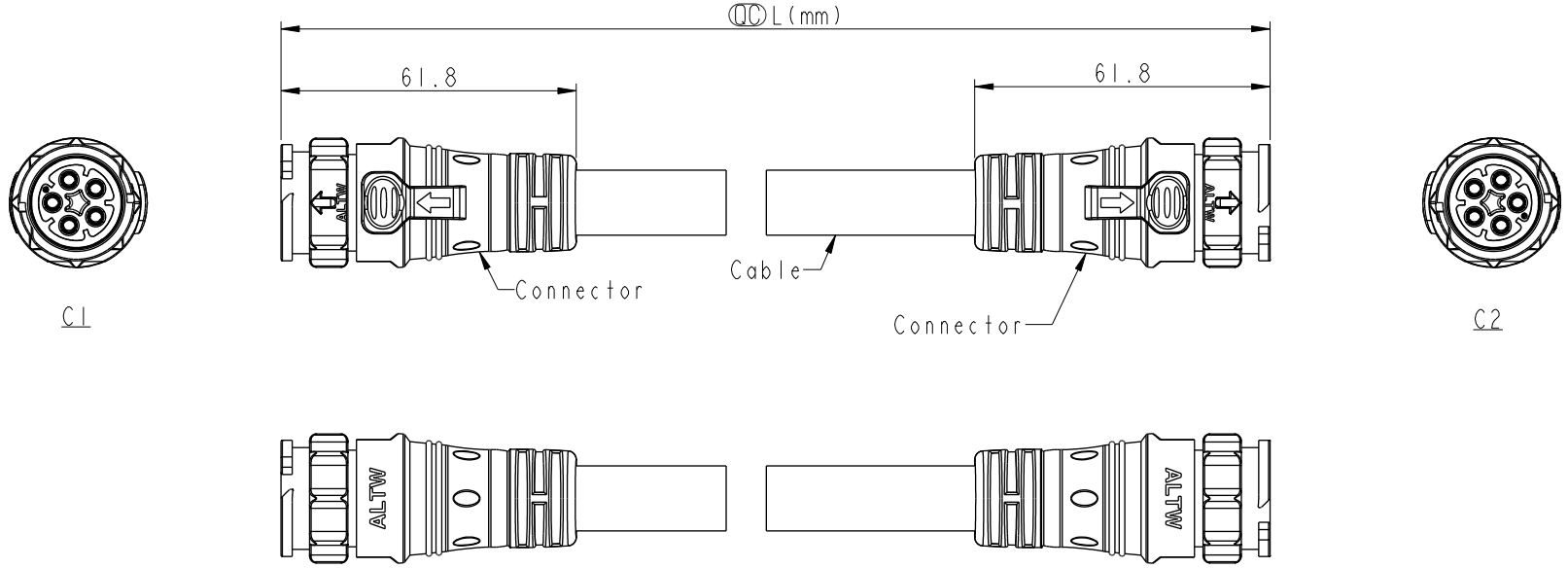

Note: (B)
* RoHS Compliant
* (QC) Important dimension
* Waterproof rate: IPX8, mated 1m/24h
* Connector
  Housing: Thermoplastic, Black
  Pin: Copper Alloy, Gold Plated
  Outer mold: Thermoplastic, Black
* Cable: SJTW, PVC Jacket, Black
* Cable length tolerance: 0.5M < L ≤ 1M: +60/-0 mm
  1M < L ≤ 3M: +120/-0 mm
  3M < L ≤ 5M: +160/-0 mm
  5M < L ≤ 10M: ±100 mm
  10M < L ≤ 20M: ±200 mm
  20M < L ≤ 30M: ±300 mm
  30M < L ≤ 99M: ±500 mm

UNIT: mm	TITLE: ACC, XLOK, D-20A, DB-ENDED MM	Amphenol LTW 安費諾亮泰企業股份有限公司	ITEM NO	DRAWN BY: Ruru	DATE: 2020-01-13
TOLERANCE: ±0.5 mm	SCALE: 1:2 / SIZE: A4 / SHEET 1 OF 2		DWG NO: AB-DCXXHL-DCHL-QEXXX	CHECKED BY: Rita	DATE: 2020-01-13
	REV.: B / WC-REV.	(QC): Inspection item	CUSTOMER: ALTW	APPROVED BY: Max	DATE: 2020-01-13

THIS DOCUMENT IS SUBJECT TO CHANGE WITHOUT NOTICE. IT IS CONFIDENTIAL AND A PROPERTY OF Amphenol LTW. DISCLOSURE TO THIRD PARTY HAS TO BE AUTHORIZED BY Amphenol LTW.

Contacts	Cable Jacket	Cable OD	AWG	Item No.
5P	PVC	13.6	12	AB-DC05HL-DCHL-QEXXX
3P		11.7		AB-DC03HL-DCHL-QEXXX
2P		10.7		AB-DC02HL-DCHL-QEXXX

AB- DC XX H L - DC H L - Q E XXX

B

XX: No. Of Pin

XXX: 0.5~99Meters
A05: 0.5 Meter
001: 01 Meter
002: 02 Meters
:
099: 99 Meters

Pin Out			
	2 White 白 1 Black 黑 Pin # Wire	3 Green 綠 2 White 白 1 Black 黑 Pin # Wire	5 Brown 棕 4 Red 紅 3 Green 綠 2 White 白 1 Black 黑 Pin # Wire
C1 & C2	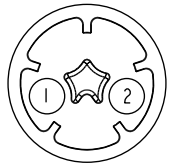 2P	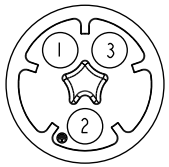 3P	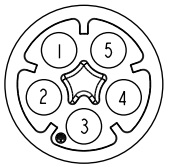 5P
Pin Assignments Front View			

UNIT: mm

TOLERANCE

± 0.5 mm

TITLE: ACC, XLOK, D-20A, DB-ENDED MM

SCALE: 1:2 | SIZE: A4 | SHEET 2 OF 2

REV. B | WC-REV.

QC: Inspection item

Amphenol LTW

安費諾亮泰企業股份有限公司

ITEM NO	DRAWN BY: Ruru	DATE: 2020-01-13
DWG NO: AB-DCXXHL-DCHL-QEXXX	CHECKED BY: Rita	DATE: 2020-01-13
CUSTOMER: ALTW	APPROVED BY: Max	DATE: 2020-01-13

THIS DOCUMENT IS SUBJECT TO CHANGE WITHOUT NOTICE. IT IS CONFIDENTIAL AND A PROPERTY OF Amphenol LTW. DISCLOSURE TO THIRD PARTY HAS TO BE AUTHORIZED BY Amphenol LTW.