REV.	ECN NO.	DATE	SIGN	DESCRIPTION
B	C191495	2019/09/02	Allen Pan	Modify Pin Out
C	C192012	2019/11/18	Allen Pan	△C X4
D	C220487	2022/03/30	Vicky	△D X6

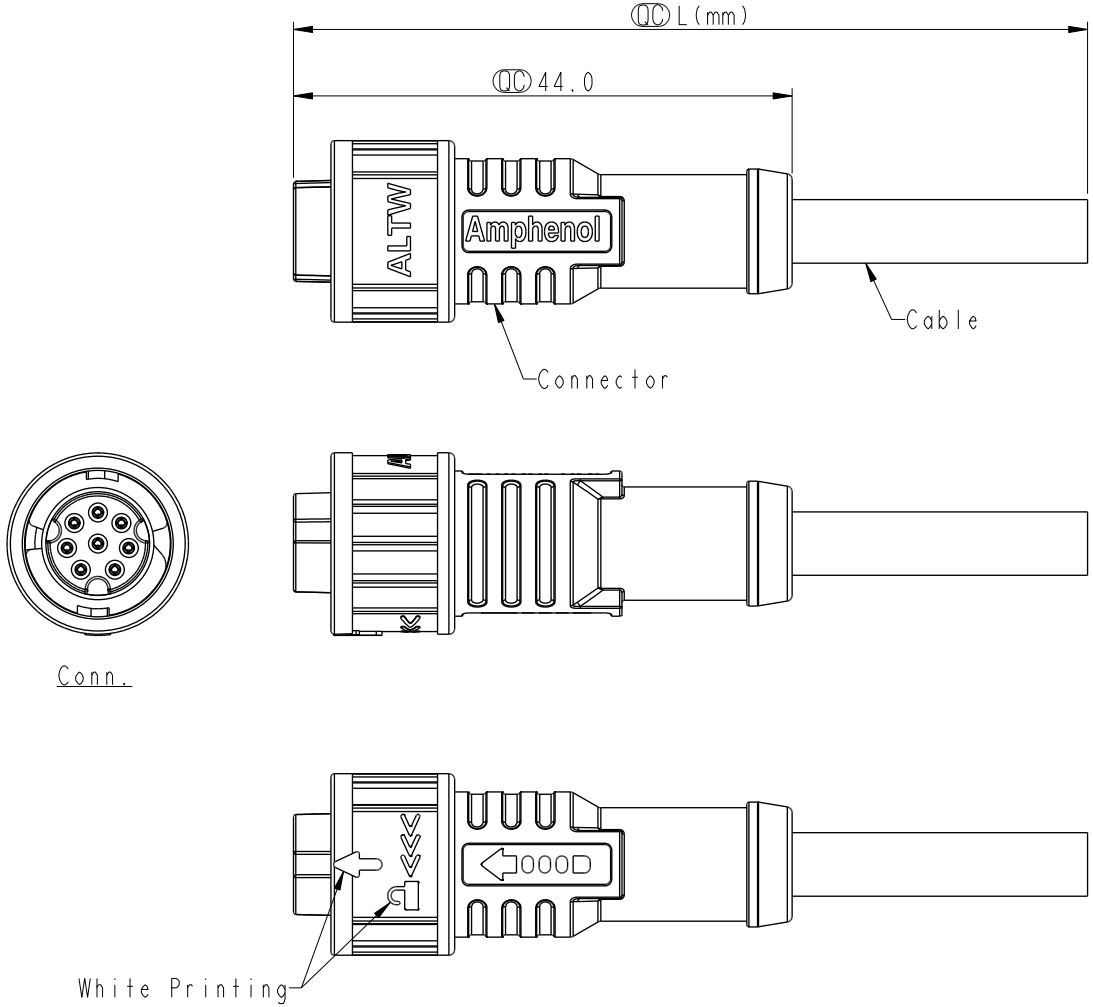

△C △D
Note:
* RoHS Compliant
* QC Important dimension
* Waterproof rate: IPX8, mated 1m/24h
* Connector
  Housing: Thermoplastic, Black
  Pin: Copper alloy, Gold plated
  O-Ring: Rubber, Black
  Nut: Thermoplastic, Black
  Outer mold: Thermoplastic, Black
* Cable: UL21388, PVC Jacket, Black
* Cable length tolerance: 1M: +50/-0 mm
  1M < L ≦ 3M: +100/-0 mm
  3M < L ≦ 5M: +150/-0 mm
  5M < L ≦ 10M: ±100 mm
  10M < L ≦ 20M: ±200 mm
  20M < L ≦ 30M: ±300 mm
  30M < L ≦ 99M: ±500 mm

UNIT: mm	TITLE: XLOK, A-2A, CABLE W/O SR F, F, MOLDING, PUSH LOCK △D	Amphenol LTW 安費諾亮泰企業股份有限公司	ITEM NO	DRAWN BY: Gill Lai / DATE: 2019-09-02
TOLERANCE: ±0.5mm	SCALE: 3:2 / SIZE: A4 / SHEET 1 OF 2		DWG NO: △C AU-XXBFFM-QL8DXX	CHECKED BY: Sam Ho / DATE: 2019-09-02
	REV.: D / WC-REV.	QC: Inspection item	CUSTOMER: ALTW	APPROVED BY: Fred Lee / DATE: 2019-09-02

THIS DOCUMENT IS SUBJECT TO CHANGE WITHOUT NOTICE. IT IS CONFIDENTIAL AND A PROPERTY OF Amphenol LTW. DISCLOSURE TO THIRD PARTY HAS TO BE AUTHORIZED BY Amphenol LTW.

Contacts (D)	Cable OD	AWG	Item No.
8P	5.6	24	AU-08BFFM-QL8DXX
6P	5.2		AU-06BFFM-QL8DXX

(C)(D) AU-XXBFFM-QL8DXX

XX: No. Of Pin

XX:01~99Meters
01:01Meter
02:02Meters
:
99:99Meters

Pin Out		
	7 Blue 藍 6 Pink 粉紅 4 Yellow 黃 3 Green 綠 2 Brown 棕 1 White 白 Pin # Wire	8 Red 紅 7 Blue 藍 6 Pink 粉紅 5 Gray 灰 4 Yellow 黃 3 Green 綠 2 Brown 棕 1 White 白 Pin # Wire
Conn.	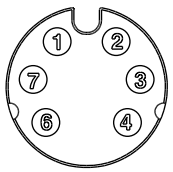 (B) 6P	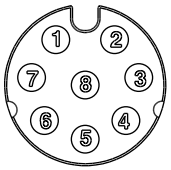 (B) 8P

(D) Pin Assignments Front View

UNIT:mm

TOLERANCE ±0.5mm

TITLE: XLOK, A-2A, CABLE W/O SR F, F, MOLDING, PUSH LOCK (D)

SCALE 3:2 | SIZE A4 | SHEET 2 OF 2

REV. D | WC-REV.

(QC):Inspection item

Amphenol LTW
安費諾亮泰企業股份有限公司

ITEM NO	DRAWN BY: Gill Lai	DATE: 2019-09-02
DWG NO: (C) AU-XXBFFM-QL8DXX	CHECKED BY: Sam Ho	DATE: 2019-09-02
CUSTOMER: ALTW	APPROVED BY: Fred Lee	DATE: 2019-09-02

THIS DOCUMENT IS SUBJECT TO CHANGE WITHOUT NOTICE. IT IS CONFIDENTIAL AND A PROPERTY OF Amphenol LTW. DISCLOSURE TO THIRD PARTY HAS TO BE AUTHORIZED BY Amphenol LTW.