REV.	ECN NO.	DATE	SIGN	DESCRIPTION
A		2020/05/27	Allen Pan	Rev.03 To Rev.A
B	C220487	2022/04/06	Vicky	B X7

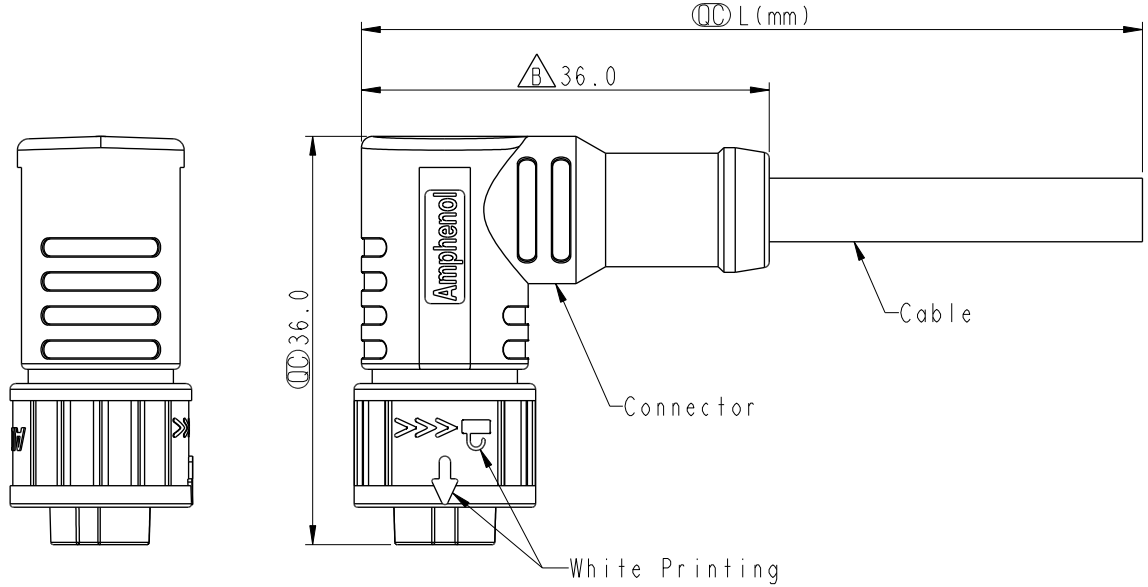

Conn.

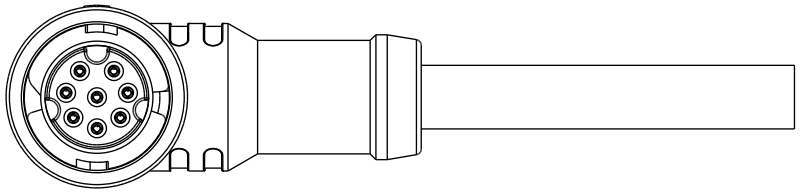

B
Note:
* RoHS Compliant
* QC Important dimension
* Waterproof rate: IPX8, mated 1m/24h
* Connector
  Housing: Thermoplastic, Black
  Pin: Copper alloy, Gold plated
  O-Ring: Rubber, Black
  Nut: Thermoplastic, Black
  Outer mold: Thermoplastic, Black
* Cable: UL21388, PVC Jacket, Black
* Cable length tolerance: 1M: +50/-0 mm
  1M < L ≦ 3M: +100/-0 mm
  3M < L ≦ 5M: +150/-0 mm
  5M < L ≦ 10M: ±100 mm
  10M < L ≦ 20M: ±200 mm
  20M < L ≦ 30M: ±300 mm
  30M < L ≦ 99M: ±500 mm

UNIT: mm	TITLE: XLOK, A-2A, CABLE W/O SR F, F, MOLDING, PUSH LOCK B	Amphenol LTW 安費諾亮泰企業股份有限公司	ITEM NO	DRAWN BY: Allen Pan	DATE: 2020-05-27
TOLERANCE ±0.5mm	SCALE 3:2 / SIZE A4 / SHEET 1 OF 2		DWG NO: AU-XXBFFM-QR8DXX	CHECKED BY: Sam Ho	DATE: 2020-05-27
	REV. B / WC-REV. A.1	QC: Inspection item	CUSTOMER: ALTW	APPROVED BY: Fred Lee	DATE: 2020-05-27

THIS DOCUMENT IS SUBJECT TO CHANGE WITHOUT NOTICE. IT IS CONFIDENTIAL AND A PROPERTY OF Amphenol LTW. DISCLOSURE TO THIRD PARTY HAS TO BE AUTHORIZED BY Amphenol LTW.

Contacts	Cable OD	AWG	Item No.
8P	5.6	24	AU-08BFFM-QR8DXX
6P	5.2		AU-06BFFM-QR8DXX

B

B

AU-XXBFFM-QR8DXX

XX: No. Of Pin

XX:01~99Meters
01:01Meter
02:02Meters
:
99:99Meters

Pin Out	6P Pin #	6P Wire	8P Pin #	8P Wire
	7	Blue 藍	8	Red 紅
	6	Pink 粉紅	7	Blue 藍
	4	Yellow 黃	6	Pink 粉紅
	3	Green 綠	5	Gray 灰
	2	Brown 棕	4	Yellow 黃
	1	White 白	3	Green 綠
			2	Brown 棕
			1	White 白

Conn.

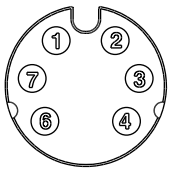

6P

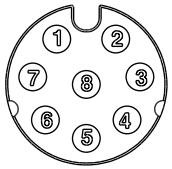

8P

B Pin Assignments Front View

UNIT:mm

TOLERANCE

±0.5mm

TITLE: XLOK, A-2A, CABLE W/O SR F, F, MOLDING, PUSH LOCK B

SCALE 3:2 | SIZE A4 | SHEET 2 OF 2

REV. B | WC-REV. A.1 | QC: Inspection item

Amphenol LTW

安費諾亮泰企業股份有限公司

ITEM NO	DRAWN BY: Allen Pan	DATE: 2020-05-27
DWG NO: AU-XXBFFM-QR8DXX	CHECKED BY: Sam Ho	DATE: 2020-05-27
CUSTOMER: ALTW	APPROVED BY: Fred Lee	DATE: 2020-05-27

THIS DOCUMENT IS SUBJECT TO CHANGE WITHOUT NOTICE. IT IS CONFIDENTIAL AND A PROPERTY OF Amphenol LTW. DISCLOSURE TO THIRD PARTY HAS TO BE AUTHORIZED BY Amphenol LTW.