REV.	ECN NO.	DATE	SIGN	DESCRIPTION
B	LE31780334	2017/08/01	Lingpeng	Change The Material Of Body
C	C200210	2020/02/25	Ruru	(C) X3
D	C201021	2020/07/09	Wesley Lin	(D) X1

ALTW
CONFIDENTIAL
2020-02-25
R&D DEPT.

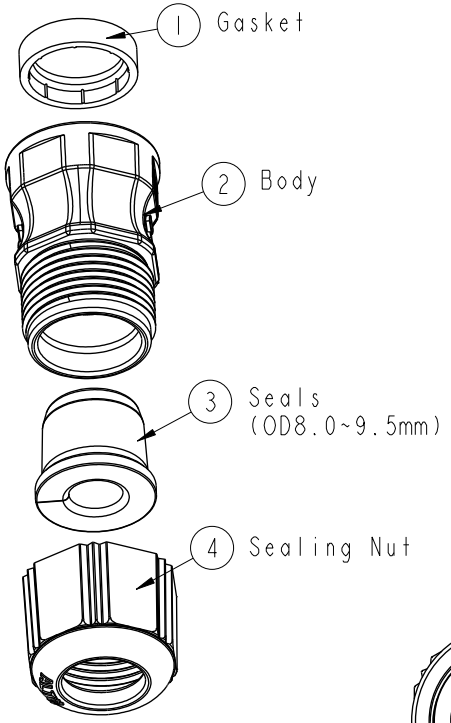

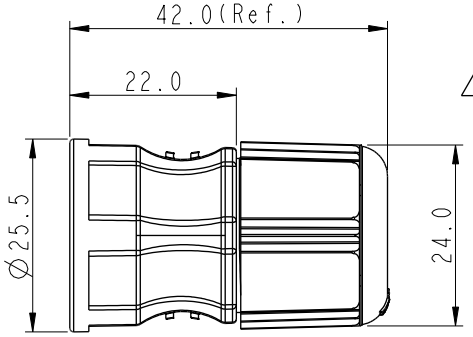

(B)(C)(D) Note:
* (QC) Important Dimension To Check
* Waterproof Rating: IP67
* Cable OD: Ø8.0~Ø9.5mm
* Gasket: Rubber, Gray.
* Seals: Rubber, Gray.
* Body: Thermoplastic, Black.
* Sealing Nut: Thermoplastic, Black.
* (4) 只需鎖2~3牙

*線材必需爲充實型，建議鎖合力爲8~10Kg

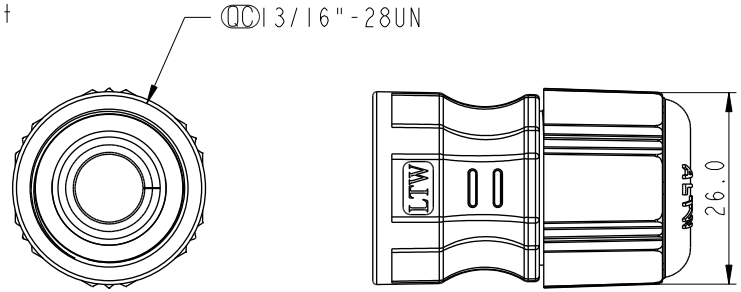

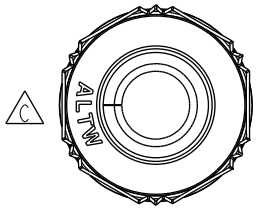

UNIT: mm	TITLE: CABLE GLAND, 13/16"-28, PC 08, 9.5, BK (C)	Amphenol LTW 安費諾亮泰企業股份有限公司	ITEM NO: CSG-CSP002	DRAWN BY: Lingpeng	DATE: 2017-08-01
TOLERANCE .X ±0.25 .XX ±0.1 .XXX ±0.05 ANGLES ±1°	SCALE: 1:2 / SIZE: A4 / SHEET 1 OF 1		DWG NO: CSG-CSP002	CHECKED BY: MaFei	DATE: 2017-08-01
	REV.: D / WC-REV.: .0	(QC): Inspection item	CUSTOMER: ALTW	APPROVED BY: Jerry	DATE: 2017-08-01

WI0814-03-RW01A2

THIS DOCUMENT IS SUBJECT TO CHANGE WITHOUT NOTICE. IT IS CONFIDENTIAL AND A PROPERTY OF Amphenol LTW. DISCLOSURE TO THIRD PARTY HAS TO BE AUTHORIZED BY Amphenol LTW.