REV.	ECN NO.	DATE	SIGN	DESCRIPTION
A	Initial Release	2016-11-02	Cary Liu	Change Rev.01 To Rev.A
B	LE317B0193	2017-11-18	Frank Deng	Update Drawing

ALTW
CONFIDENTIAL
2017-11-18
R&D DEPT.

ALTW
DCC. DEPT.
CONFIDENTIAL
2017.12.12
ISSUED

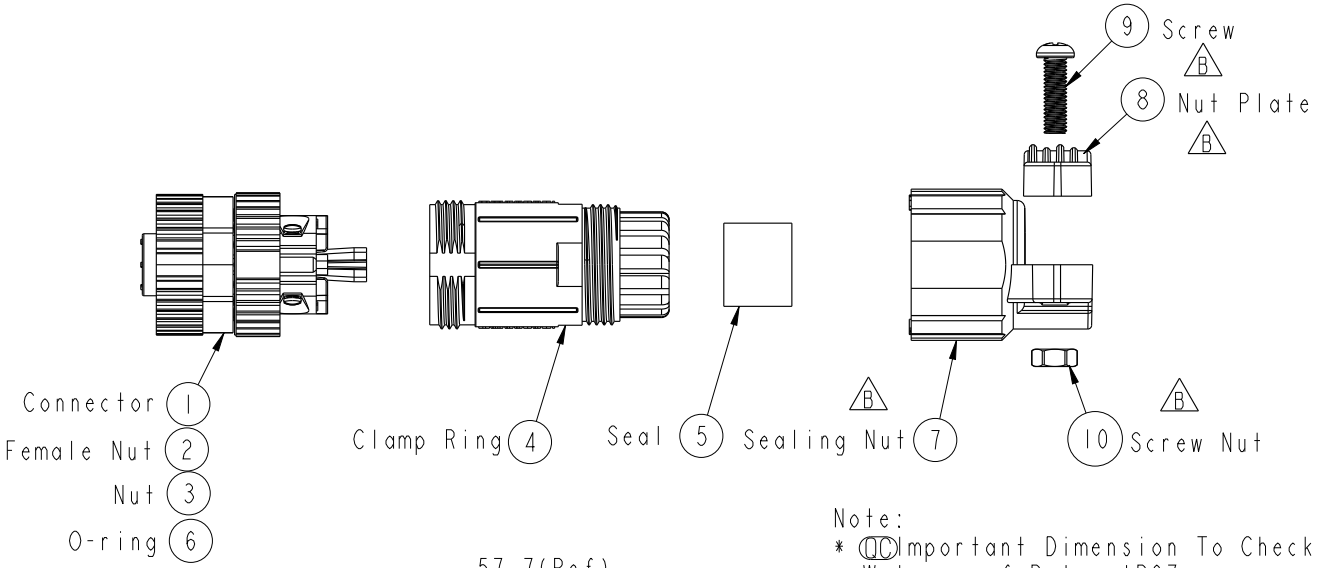

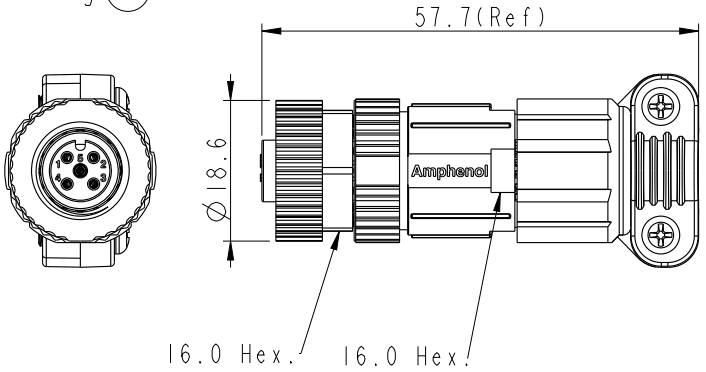

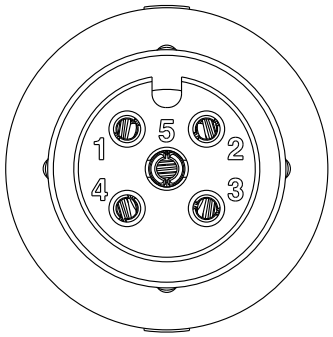

Pin Assignments
Front View

Note:
* QC Important Dimension To Check.
* Waterproof Rate: IP67
* Housing: Nylon,Black
* Female Pin: Copper Alloy, Gold Plated
* Female Nut: Zinc Alloy, Nickel Plated
* Nut: PBT+PC,Black
* O-Ring: Silicon,Grey
* Clamp Ring: Nylon,Black
* Seal: Silicon,Grey
* B Sealing Nut: Nylon+GF,Black
* B Nut Plate: Nylon+GF,Black
* Seal For Cable OD:Ø4.0mm~Ø8.0mm
* Screws for Wire connection recommended tightening torque: 0.61~0.84 kgf.cm / 0.059~0.082 N.m
* Applicable Wire gauge (Stranded wire cross section) 0.14mm2 (26AWG) ~ 0.82mm2 (18AWG)
* Mating Recommended tightening torque: 4~6 kgf.cm / 0.39~0.59 N.m
* Sealing-Nut Recommended tightening torque: 4~6 kgf.cm / 0.39~0.59 N.m
* Detailed applicable wire specifications may vary depending on the actual wire construction.

UNIT:mm

TOLERANCE
.X ±0.25
.XX ±0.1
.XXX ±0.05
ANGLES ±1°

TITLE	M12 Unshielded Assy 5Pin F Conn. F Pin		
SCALE 1:1	SIZE A4	SHEET 1 OF 1	
REV. B	WC-REV. A.2	QC:Inspection item	

Amphenol LTW
安費諾亮泰企業股份有限公司

ITEM NO HMC-05BFFB-SL7001	DRAWN BY Frank Deng	DATE 2017-11-18
DWG NO HMC-05BFFB-SL7001	CHECKED BY Fisher Wang	DATE 2017-11-18
CUSTOMER ALTW	APPROVED BY Kevin Hu	DATE 2017-11-18

FMW10702-01-02A1

THIS DOCUMENT IS SUBJECT TO CHANGE WITHOUT NOTICE. IT IS CONFIDENTIAL AND A PROPERTY OF Amphenol LTW. DISCLOSURE TO THIRD PARTY HAS TO BE AUTHORIZED BY Amphenol LTW.