REV.	ECN NO.	DATE	SIGN	DESCRIPTION
A	Initial Release	2017-04-13	Frank Deng	Rev.01 To Rev.A
B	LE317B0192	2017-11-14	Frank Deng	Update Drawing

ALTW
CONFIDENTIAL
2017-11-14
R&D DEPT.

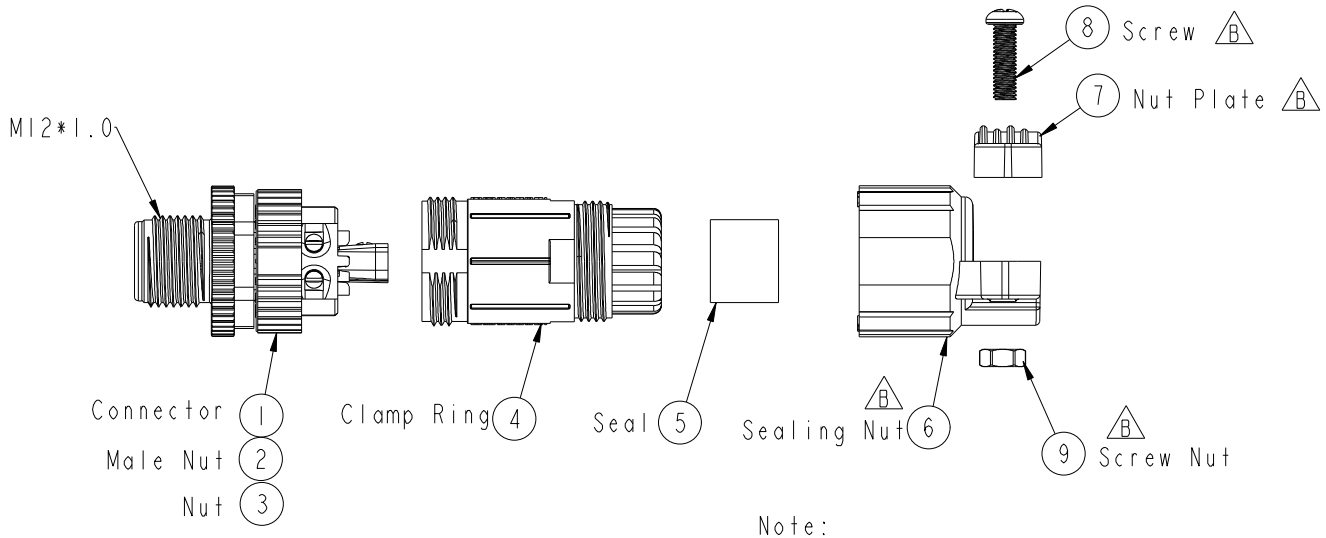

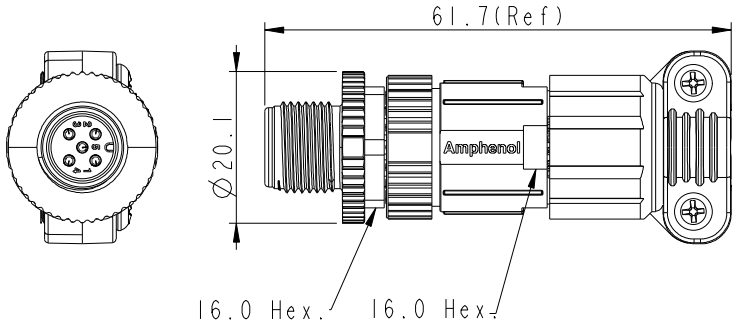

Note:
* QC Important Dimension To Check.
* Waterproof Rate: IP67
* Housing: Nylon,Black
* Male Pin: Copper Alloy, Gold Plated
* Male Nut: PBT+PC,Black
* Nut: PBT+PC,Black
* O-Ring:Silicon, Grey.
* Clamp Ring: Nylon,Black
* Seal:Silicon, Grey
* B Sealing Nut: Nylon+GF,Black
* B Nut Plate: Nylon+GF,Black
* Seal For Cable OD:Ø4.0mm~Ø8.0mm
* Screws for Wire connection recommended tightening torque: 0.61~0.84 kgf.cm / 0.059~0.082 N.m
* Applicable Wire gauge (Stranded wire cross section) 0.14mm2 (26AWG) ~ 0.82mm2 (18AWG)
* Mating Recommended tightening torque: 4~6 kgf.cm / 0.39~0.59 N.m
* Sealing-Nut Recommended tightening torque: 4~6 kgf.cm / 0.39~0.59 N.m
* Detailed applicable wire specifications may vary depending on the actual wire construction.

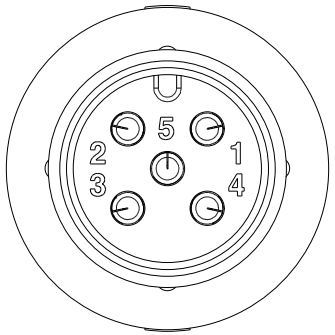

Pin Assignments
Front View

UNIT:mm

TOLERANCE
.X ±0.25
.XX ±0.1
.XXX ±0.05
ANGLES ±1°

TITLE: NMEA MICRO-C,FIELD INSTALLABLE 5PIN, S/T, M CONN M PIN, PLASTIC

SCALE	SIZE	SHEET
1:1	A4	1 OF 1
REV. B	WC-REV. A.3	QC: Inspection item

Amphenol LTW
安費諾亮泰企業股份有限公司

ITEM NO	DRAWN BY	DATE
HPC-05BMMB-SL7001	Frank Deng	2017-11-14
DWG NO: HPC-05BMMB-SL7001	CHECKED BY: Fisher Wang	DATE: 2017-11-14
CUSTOMER: ALTW	APPROVED BY: Kevin Hu	DATE: 2017-11-14

W10814-03-RM01A2

THIS DOCUMENT IS SUBJECT TO CHANGE WITHOUT NOTICE. IT IS CONFIDENTIAL AND A PROPERTY OF Amphenol LTW. DISCLOSURE TO THIRD PARTY HAS TO BE AUTHORIZED BY Amphenol LTW.