REV.	ECN NO.	DATE	SIGN	DESCRIPTION
A	Initial Release	2015/10/09	Mila	Change Rev.01 To Rev.A
B	C201453	2020/10/07	Ruru	(B) X4
C	C210561	2021/04/12	Vicky	(C) X2

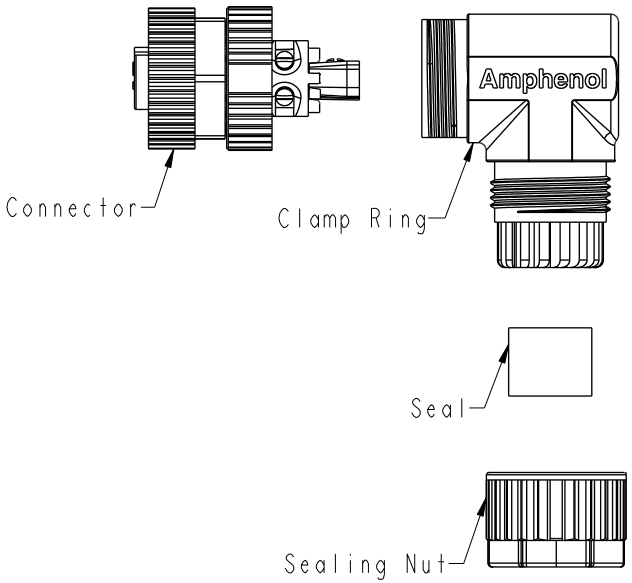

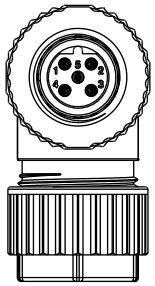

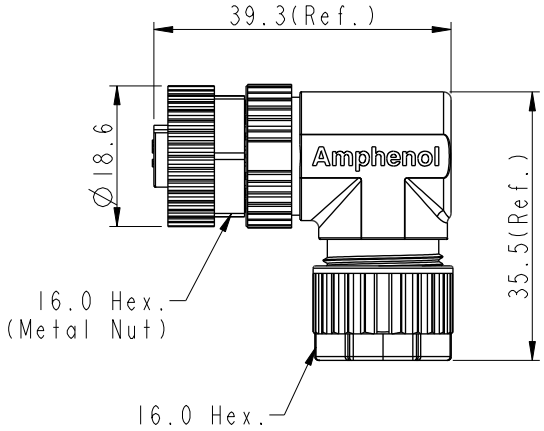

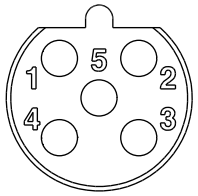

5P

Pin Assignments
Front View

(B) M12B-XXBFFB-SR7001

XX: No. Of Pin

(B)(C)
Note:
* RoHS Compliant
* (QC) Important Dimension
* Waterproof rate: IPX7, mated
* Connector
  Housing: Thermoplastic, Black
  Pin: Copper alloy, Gold plated
  Extension Nut: Thermoplastic, Black
  Nut: Metal
  O-Ring: Rubber, Gray
* Clamp Ring: Thermoplastic, Black
* Sealing Nut: Thermoplastic, Black
* Seal: Rubber, Gray, OD:Ø4.0mm~Ø7.0mm
* One set unassembled in one pe bag

UNIT: mm

TOLERANCE (C)

.X	±0.25
.XX	±0.1
.XXX	±0.05
ANGLES	±1°

TITLE (B): N SEN, M12 B, SCREW CABLE W/O SR, F, F, FI SCREWIN

SCALE	SIZE	SHEET	OF
1:1	A4	1	1

REV.	WC-REV.
C	A.1

(QC): Inspection item

Amphenol LTW
安費諾亮泰企業股份有限公司

ITEM NO	DRAWN BY: Mila	DATE: 2015-10-09
DWG NO: (B) M12B-XXBFFB-SR7001	CHECKED BY: Cary	DATE: 2015-10-09
CUSTOMER: ALTW	APPROVED BY: Jerry	DATE: 2015-10-09

THIS DOCUMENT IS SUBJECT TO CHANGE WITHOUT NOTICE. IT IS CONFIDENTIAL AND A PROPERTY OF Amphenol LTW. DISCLOSURE TO THIRD PARTY HAS TO BE AUTHORIZED BY Amphenol LTW.