REV.	ECN NO.	DATE	SIGN	DESCRIPTION
C	LEN1690060~061	2016/09/05	Yulong_wang	Add 3, 4 Pin & IP69K.
D	C201469	2020/09/24	Ruru	D X6
E	C210309	2021/02/25	Ruru	E X2

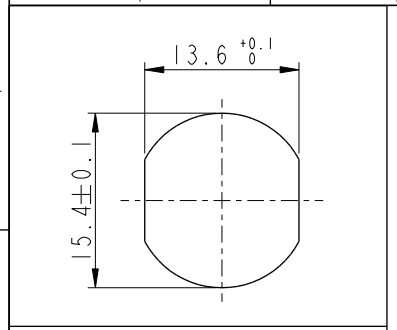

Recommended Panel Cut-Out

B D

C D

M12B-XXPFFP-SF8001

XX: No. Of Pin

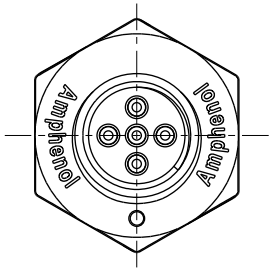

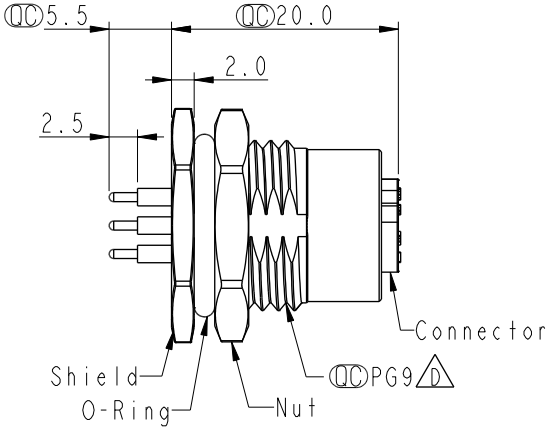

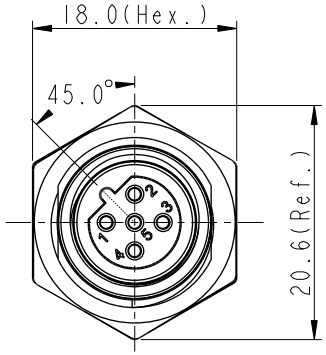

C

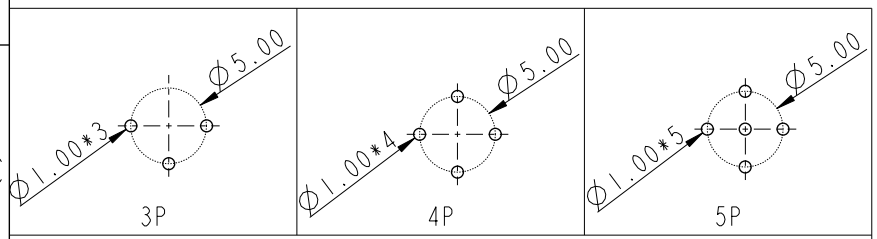

PCB Layout

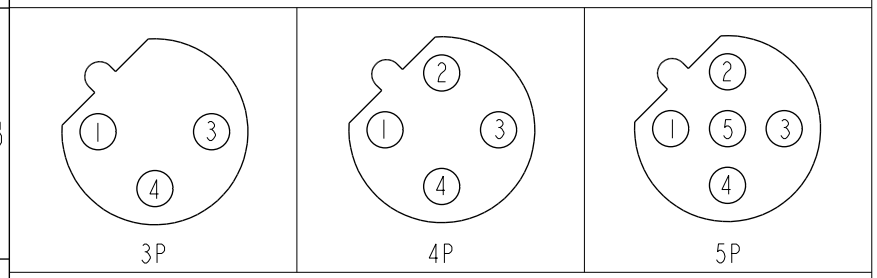

Pin Assignment Front View

D E Note:

- * RoHS Compliant
- * QC Important dimension
- C * Waterproof rate: IPX8, unmated 1m/24h
  IPX9K, unmated
- * Connector
  Housing: Thermoplastic, Black
  Pin: Copper alloy, Gold plated
  O-Ring: Rubber, Green
- * Shield: Metal
- * Nut: Metal
- * O-Ring: Rubber, Black
- * For panel thickness max: 4.5mm
- * Nut is packed separately in pe bag

UNIT: mm

TOLERANCE
.X ±0.25
.XX ±0.1
.XXX ±0.05
ANGLES ±1°

TITLE: N SEN, M12 B, SCREW RECEPTACLE, F, F, PCB S E			
SCALE 3:2	SIZE A4	SHEET 1 OF 1	
REV. E	WC-REV. A.5	QC: Inspection item	

Amphenol LTW
安費諾亮泰企業股份有限公司

ITEM NO	DRAWN BY Yulong_wang	DATE 2016-09-05
DWG NO D M12B-XXPFFP-SF8001	CHECKED BY Jinhai	DATE 2016-09-05
CUSTOMER ALTW	APPROVED BY Jerry	DATE 2016-09-05

W10814-03-[redacted]01A2

THIS DOCUMENT IS SUBJECT TO CHANGE WITHOUT NOTICE. IT IS CONFIDENTIAL AND A PROPERTY OF Amphenol LTW. DISCLOSURE TO THIRD PARTY HAS TO BE AUTHORIZED BY Amphenol LTW.