REV.	ECN NO.	DATE	SIGN	DESCRIPTION
B	C201542	2020/10/07	Vicky	B X4
C	C210025	2021/01/19	Vicky	C X1
D	C210561	2021/04/13	Vicky	D X3

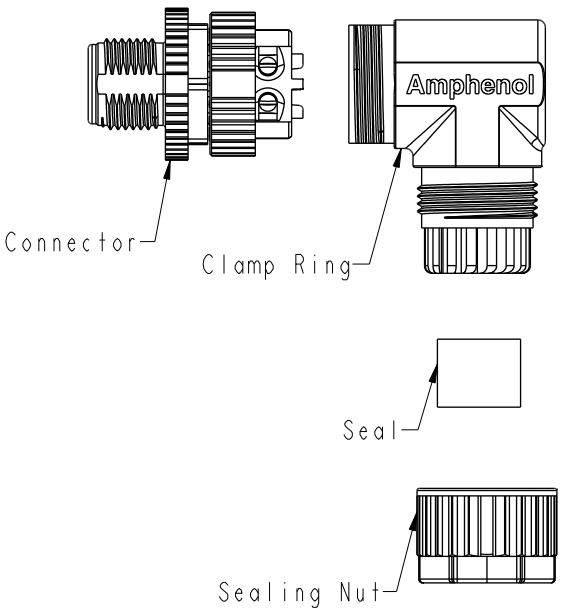

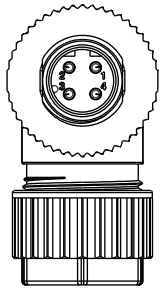

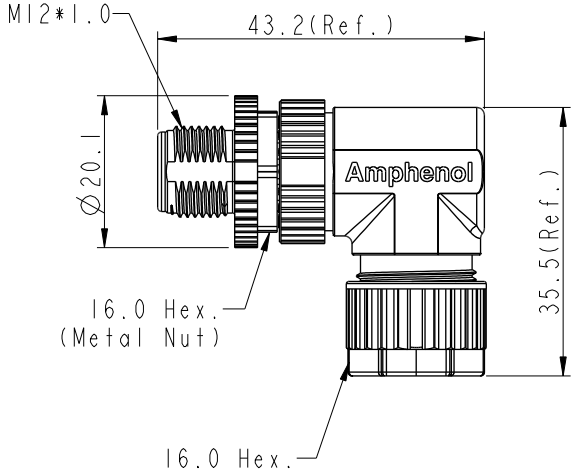

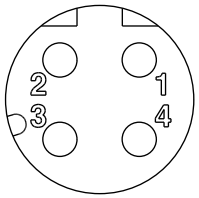

4P

Pin Assignments
Front View

B M12D-XXBMMB-SR7001

XX: No. Of Pin

B D
Note:
* RoHS Compliant
* QC Important Dimension
* Waterproof rate: IPX7, mated
* Connector
  Housing: Thermoplastic, Black
  Pin: Copper alloy, Gold plated
  Extension Nut: Thermoplastic, Black
C Nut: Metal
  O-Ring: Rubber, Gray
* Clamp Ring: Thermoplastic, Black
* Sealing Nut: Thermoplastic, Black
* Seal: Rubber, Gray, OD:Ø4.0mm~Ø7.0mm
* One set unassembled in one pe bag

UNIT: mm

D
TOLERANCE
.X ±0.25
.XX ±0.1
.XXX ±0.05
ANGLES ±1°

TITLE: N SEN, M12 D, SCREW CABLE W/O SR, M, M, FI SCREWIN B D

SCALE	SIZE	SHEET
1:1	A4	1 OF 1
REV. D	WC-REV. A.1	QC: Inspection item

Amphenol LTW
安費諾亮泰企業股份有限公司

ITEM NO	DRAWN BY: Mila	DATE: 2015-10-12
DWG NO: B M12D-XXBMMB-SR7001	CHECKED BY: Cary	DATE: 2015-10-12
CUSTOMER: ALTW	APPROVED BY: Jerry	DATE: 2015-10-12

FMW10702-01-02A1

THIS DOCUMENT IS SUBJECT TO CHANGE WITHOUT NOTICE. IT IS CONFIDENTIAL AND A PROPERTY OF Amphenol LTW. DISCLOSURE TO THIRD PARTY HAS TO BE AUTHORIZED BY Amphenol LTW.