REV.	ECN NO.	DATE	SIGN	DESCRIPTION
C	LEN1690064~065	2016/09/06	Yulong_wang	Add 3, 4 Pin & IP69K.
D	C201470	2020/10/05	Ruru	D X6
E	C210309	2021/03/11	Ruru	E X3

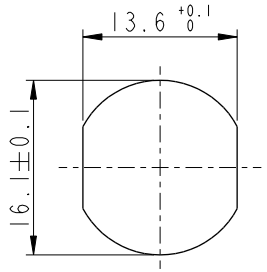

Recommended Panel Cut-Out

B D

D C

MSBS-XXPFFP-SF8002

XX: No. Of Pin

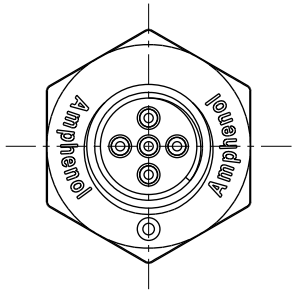

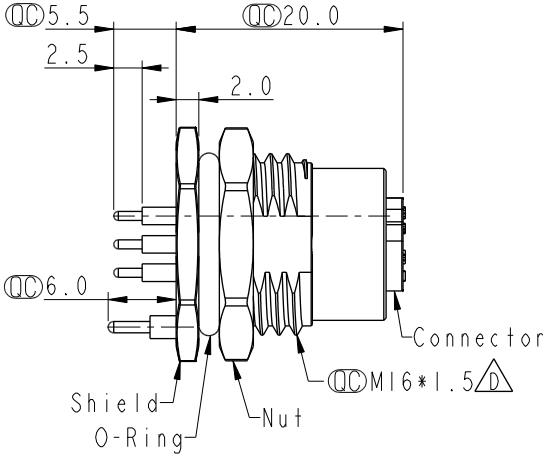

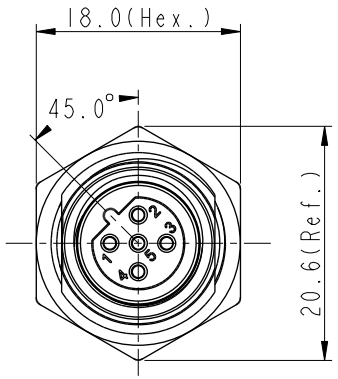

D E Note:

- * RoHS Compliant
- * QC Important dimension
- C * Waterproof rate: IPX8, unmated 1m/24h
  IPX9K, unmated
- * Connector
  Housing: Thermoplastic, Black
  Pin: Copper alloy, Gold plated
  O-Ring: Rubber, Green
- * Shield: Metal
- * Nut: Metal
- * O-Ring: Rubber, Black
- * For panel thickness max: 4.5mm
- * For pcb thickness max: 1.6mm
- * Nut is packed separately in pe bag

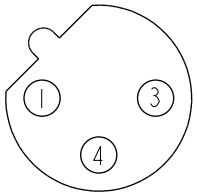

3P

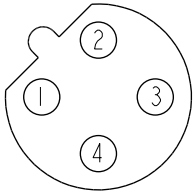

4P

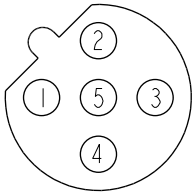

5P

C

Pin Assignment Front View

UNIT: mm

TOLERANCE

.X	±0.25
.XX	±0.1
.XXX	±0.05
ANGLES	±1°

TITLE: N SEN, M12 B -SHLD, SCREW RECEPTACLE, F, F, PCB S E

SCALE: 3:2 | SIZE: A4 | SHEET 1 OF 2

REV.: E | WC-REV.: A.5 | QC: Inspection item

Amphenol LTW

安費諾亮泰企業股份有限公司

ITEM NO	DRAWN BY: Yulong_wang	DATE: 2016-09-06
DWG NO: D MSBS-XXPFFP-SF8002	CHECKED BY: Jinhai	DATE: 2016-09-06
CUSTOMER: ALTW	APPROVED BY: Jerry	DATE: 2016-09-06

W10814-03-[redacted]01A2

THIS DOCUMENT IS SUBJECT TO CHANGE WITHOUT NOTICE. IT IS CONFIDENTIAL AND A PROPERTY OF Amphenol LTW. DISCLOSURE TO THIRD PARTY HAS TO BE AUTHORIZED BY Amphenol LTW.

PCB Layout

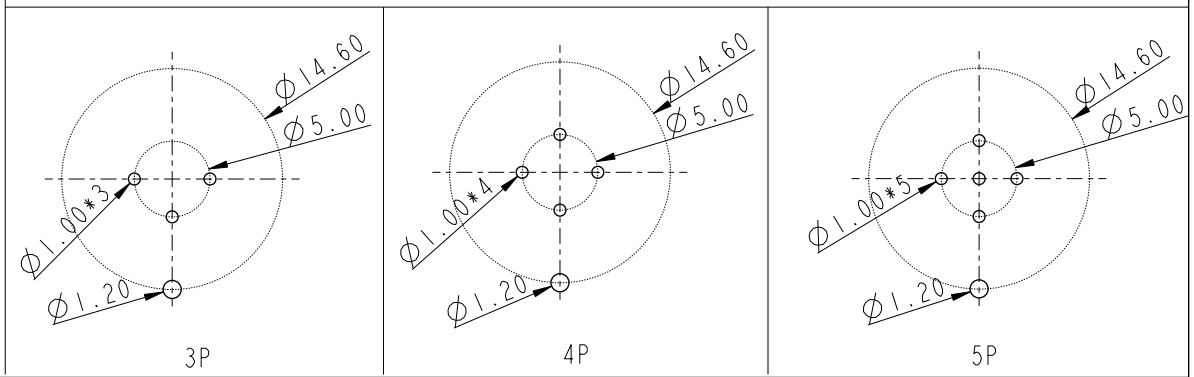

C

UNIT: mm

TOLERANCE
.X ±0.25
.XX ±0.1
.XXX ±0.05
ANGLES ±1°

TITLE: N SEN, M12 B -SHLD, SCREW RECEPTACLE, F, F, PCB S E

SCALE 3:2	SIZE A4	SHEET 2 OF 2
REV. E	WC-REV. A.4	QC: Inspection item

Amphenol LTW

安費諾亮泰企業股份有限公司

ITEM NO	DRAWN BY Yulong_wang	DATE 2016-09-06
DWG NO D MSBS-XXPFFP-SF8002	CHECKED BY Jinhai	DATE 2016-09-06
CUSTOMER ALTW	APPROVED BY Jerry	DATE 2016-09-06

WI0814-03-RW01A2

THIS DOCUMENT IS SUBJECT TO CHANGE WITHOUT NOTICE. IT IS CONFIDENTIAL AND A PROPERTY OF Amphenol LTW. DISCLOSURE TO THIRD PARTY HAS TO BE AUTHORIZED BY Amphenol LTW.