| REV. | ECN NO. | DATE | SIGN | DESCRIPTION |
|---|---|---|---|---|
| D | C201548 | 2020/10/13 | Vicky | D X5 |
| E | C210561 | 2021/04/19 | Vicky | E X3 |
| F | C210977 | 2021/06/23 | Vicky | F X1 |

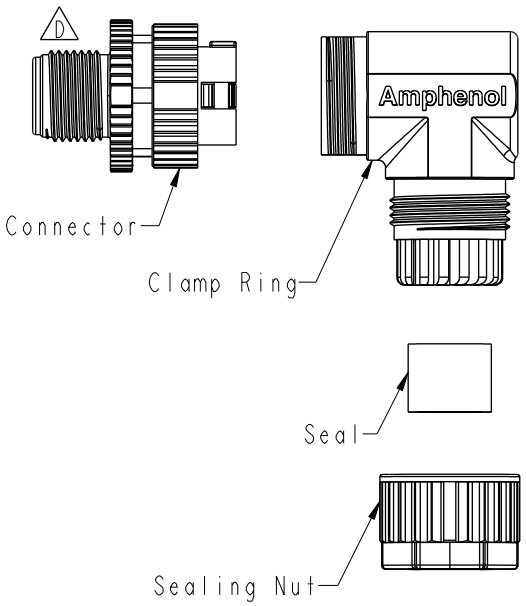


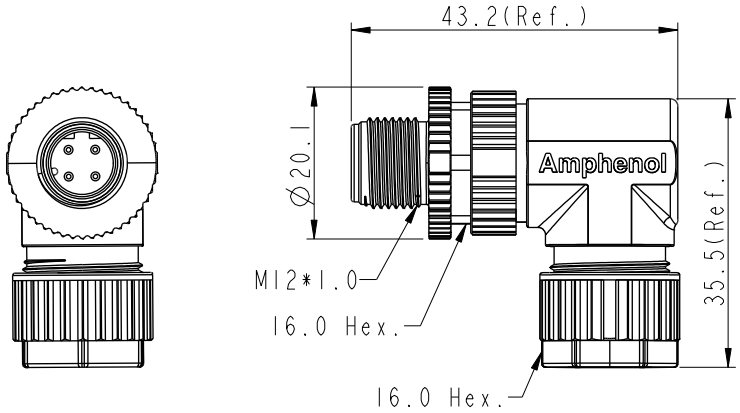


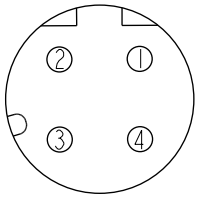


4P

Pin Assignments
Front View

PE Bag

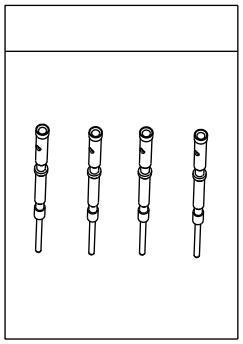

D MSDP-XXBMMC-SR7001

XX: No. Of Pin

E
Note:
* RoHS Compliant
* QC Important Dimension
* Waterproof rate: IPX7, mated
* Connector
  Housing: Thermoplastic, Black
  Pin: Copper alloy, Gold plated
  Extension Nut: Thermoplastic, Black
  Nut: Thermoplastic, Black
D O-Ring: Rubber, Gray
* Clamp Ring: Thermoplastic, Black
* Sealing Nut: Thermoplastic, Black
C * Seal: Rubber, Gray, OD:Ø4.0mm~Ø7.0mm
F * Applicable wire gauge: 20AWG~24AWG
* One set unassembled in one pe bag

UNIT: mm

TOLERANCE
.X ±0.25
.XX ±0.1
.XXX ±0.05
ANGLES ±1°

E

TITLE: N SEN, M12 D -PLASTIC, SCREW CABLE W/O SR, M, M, F1/PANEL CRIMP D E

SCALE: Free | SIZE: A4 | SHEET 1 OF 1

REV. F | WC-REV. .0 | QC: Inspection item

**Amphenol LTW**
安費諾亮泰企業股份有限公司

B

| | | |
|---|---|---|
| ITEM NO | DRAWN BY: Xiaofeng | DATE: 2019/12/18 |
| DWG NO: D MSDP-XXBMMC-SR7001 | CHECKED BY: Li-Feng | DATE: 2019/12/18 |
| CUSTOMER: ALTW | APPROVED BY: Jerry | DATE: 2019/12/18 |

W10814-03-[redacted]01A2

THIS DOCUMENT IS SUBJECT TO CHANGE WITHOUT NOTICE. IT IS CONFIDENTIAL AND A PROPERTY OF Amphenol LTW. DISCLOSURE TO THIRD PARTY HAS TO BE AUTHORIZED BY Amphenol LTW.