No.of Contact	Cable OD(mm)	Item No.
4P	8.2	MSSP-04BFFM-SR8GXX
3P	7.5	MSSP-03BFFM-SR8GXX

B C

REV.	ECN NO.	DATE	SIGN	DESCRIPTION
A	initial release	2021-10-04	Li Dai	Rew.01 to Rve.A
B	C211619	2021/12/16	Li Dai	B X1
C	C221810	2022/12/07	Li Dai	C X4

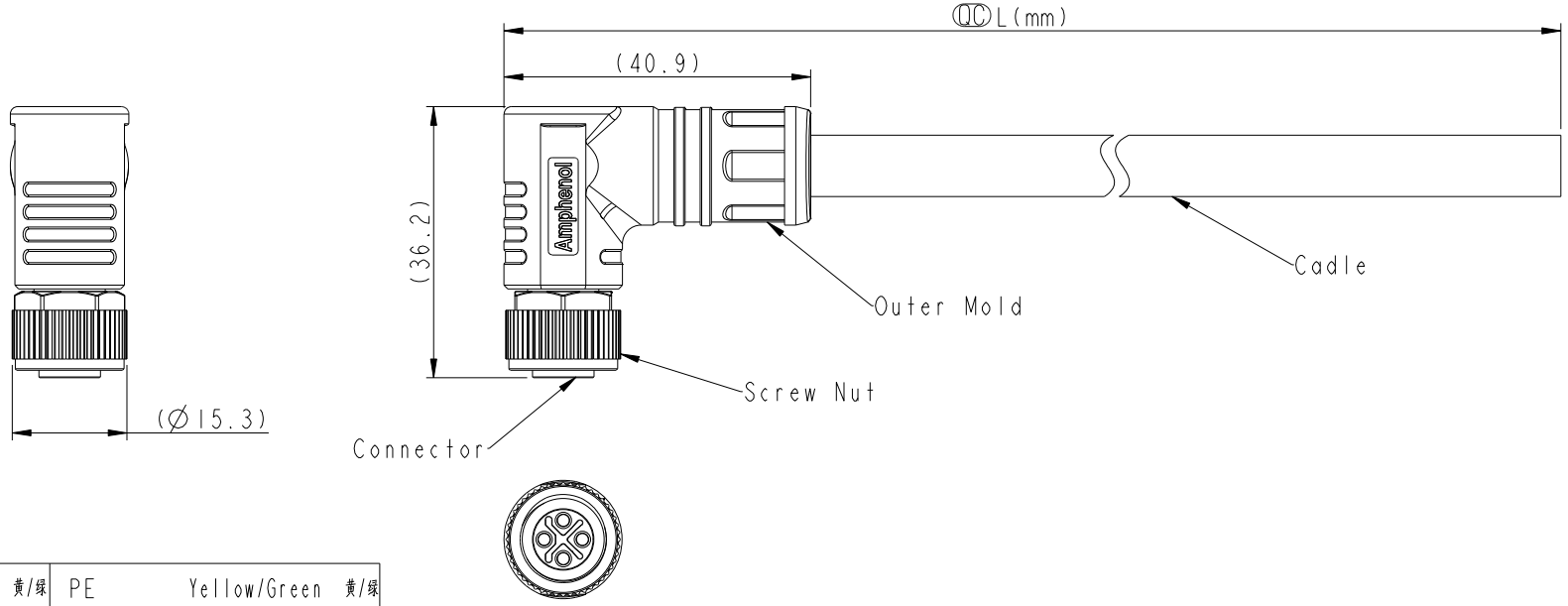

Pin #	Wire	
PE	Yellow/Green	黄/绿
3	Blue	蓝
1	Brown	棕

Pin #	Wire	
PE	Yellow/Green	黄/绿
3	Blue	蓝
2	White	白
1	Brown	棕

Pin Out

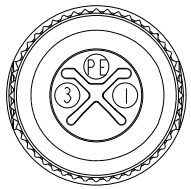

2+PE

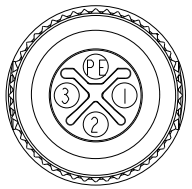

3+PE

Pin Assignments Front View

MSSP-XXBFFM-SR8GXX C

XX: 01~99 Meters
01: 01 Meter
02: 02 Meters
.
.
99: 99 Meters

No. of Pin

Notes:
* QC Important Dimension to Check.
* Waterproof Rate: IP68(1M, 24Hours).
* Connector: Thermoplastic, Black.
* Female Pin: Copper Alloy, Gold Plated.
* Screw Nut: Thermoplastic,Black
* C Cable UL2586, 16AWG, PVC Jacket, Black.
* Cable Length Tolerance: 01M:+50/-0mm
  >02M~03M:+100/-0mm
  >03M~05M:+150/-0mm
  >05M~10M:±100mm
  >10M~20M:±200mm
  >20M~30M:±300mm
  >30M~99M:±500mm

UNIT:mm

TOLERANCE ±0.5mm

TITLE: M12 S Code, R/A, Plastic Screw Nut, Female Conn + Cable

SCALE	SIZE	SHEET
1:1	A4	1 OF 1

REV. C | WC-REV. .0 | QC: Inspection item

Amphenol LTW

安費諾亮泰企業股份有限公司

ITEM NO	DRAWN BY	DATE
	Li Dai	2021-10-04
DWG NO: MSSP-XXBFFM-SR8GXX C	CHECKED BY: Fisher Wang	DATE: 2021-10-04
CUSTOMER: ALTW	APPROVED BY: Max Yang	DATE: 2021-10-04

WI0814-03-■□01A2

THIS DOCUMENT IS SUBJECT TO CHANGE WITHOUT NOTICE. IT IS CONFIDENTIAL AND A PROPERTY OF Amphenol LTW. DISCLOSURE TO THIRD PARTY HAS TO BE AUTHORIZED BY Amphenol LTW.