REV.	ECN NO.	DATE	SIGN	DESCRIPTION
E	LEN1810060	2017-11-29	Jalam	Change The Tolerance
F	C190405	2019/03/18	Ruru	Modify Note
G	C220800	2022/05/31	Vicky	G X2

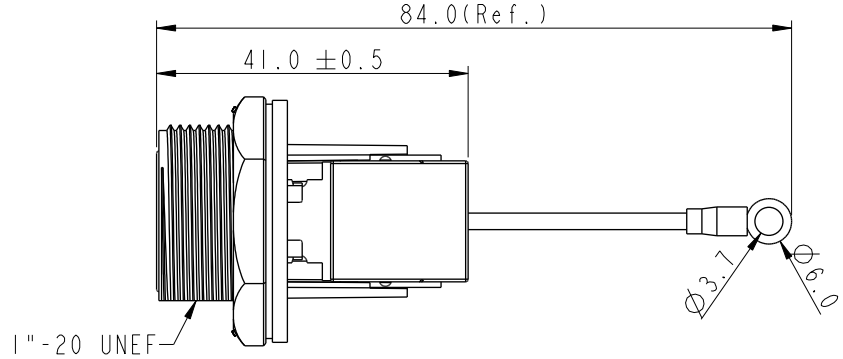

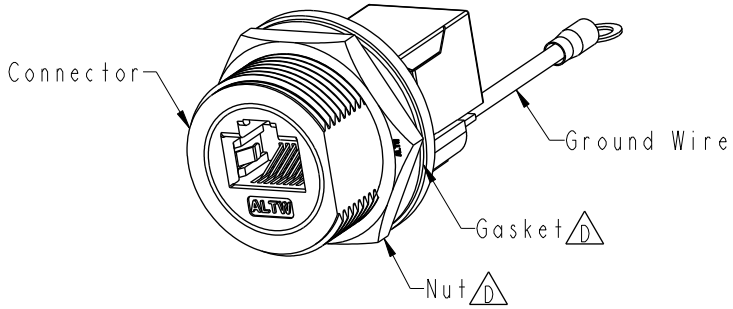

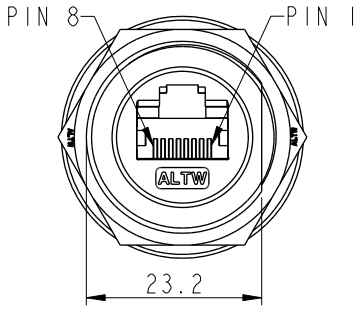

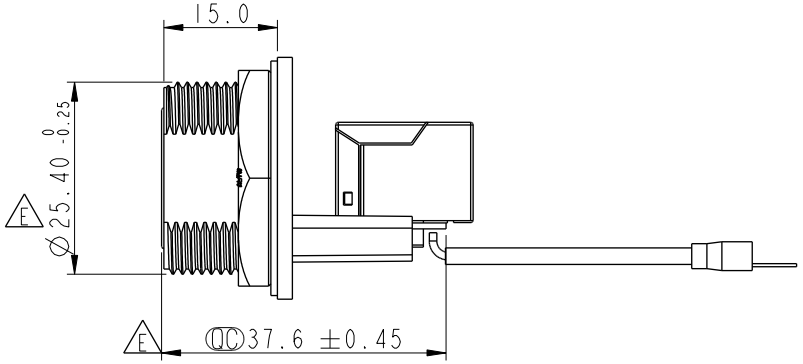

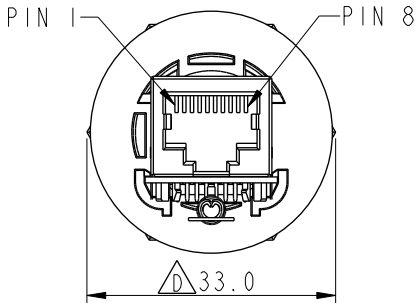

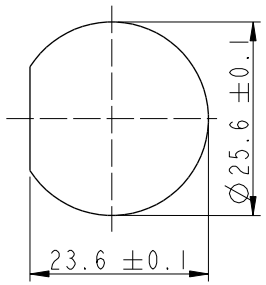

Recommended
Panel Cut-Out

F G Note:
- * RoHS Compliant
- * QC Important dimension
- * Waterproof rate: IPX7, unmated
- * Connector
  Housing: Thermoplastic, Black, RJ45 jack, shielded
- * Nut: Thermoplastic, Black
- D * Gasket: Rubber, Gray
- * Use with waterproof cap or dust cap
  Panel thickness max: 2.4mm
- * Use without waterproof cap or dust cap
  Panel thickness max: 3.6mm
- * Gasket and nut are assembled on connectors
- * Wire: UL1015, 20AWG, Green

UNIT: mm

TOLERANCE
.X ±0.25
.XX ±0.1
.XXX ±0.05
ANGLES ±1°

TITLE: RJ, D PLASTIC, C5E SHLD FRONT FASTENED, F, PNL JACK S, SCREW G

SCALE 1:1 | SIZE A4 | SHEET 1 OF 1
REV. G | WC-REV. B.8 | QC: Inspection item

Amphenol LTW
安費諾亮泰企業股份有限公司

ITEM NO RDP-5SPFFH-SCU7002	DRAWN BY Ruru	DATE 2019-03-18
DWG NO RDP-5SPFFH-SCU7002	CHECKED BY Rita	DATE 2019-03-18
CUSTOMER ALTW	APPROVED BY Max	DATE 2019-03-18

W10814-03-RW01A2

THIS DOCUMENT IS SUBJECT TO CHANGE WITHOUT NOTICE. IT IS CONFIDENTIAL AND A PROPERTY OF Amphenol LTW. DISCLOSURE TO THIRD PARTY HAS TO BE AUTHORIZED BY Amphenol LTW.