REV.	ECN NO.	DATE	SIGN	DESCRIPTION
B	LE3-9A0070~73	2009/10/13	Li Xiu Zhi	Change Screw Nut
C	LEN13B0223~26	2013/09/14	Cary	Change Logo From LTW To Amphenol
D	C211215	2021/08/09	Jiahe Lin	△D X2

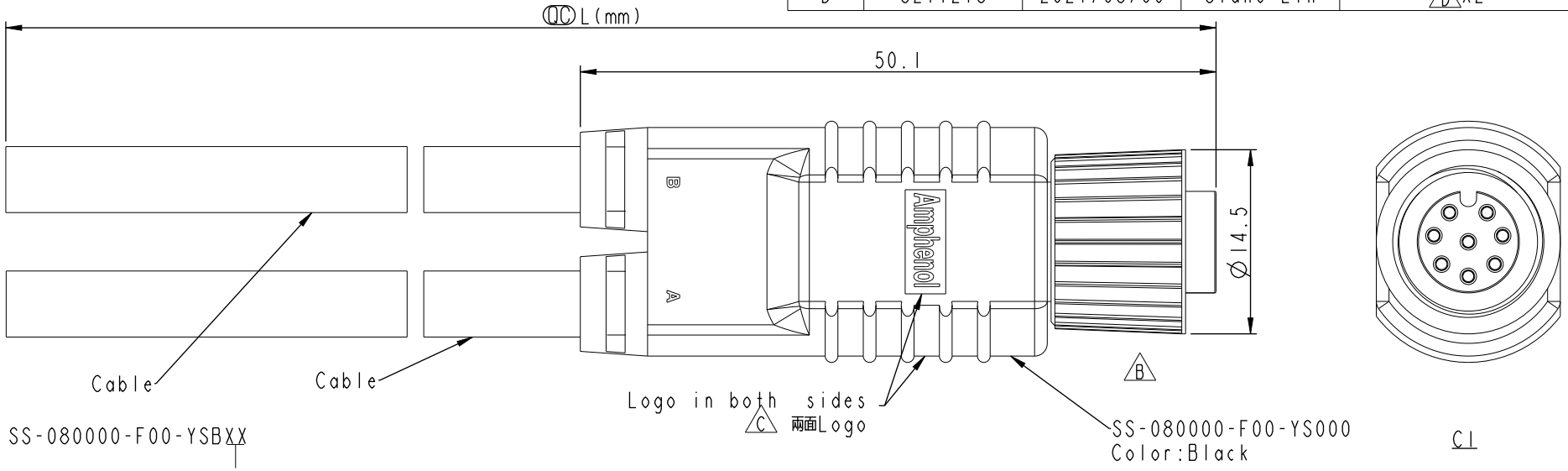

SS-080000-F00-YSBXX

XX:01~99Meters
01:01Meter
02:02Meters
⋮
99:99Meters
Cable Length(L):01~99Meters

△D Note:
* RoHS Compliant
* QC Important dimension
* Waterproof rate: IPX8, unmated 1m/24h
* Connector
  Housing: Thermoplastic, Black
  Pin: Copper alloy, Gold plated
  O-Ring: Rubber, Green
  Mating Nut: Metal
  Outer mold: Thermoplastic, Black
* Cable: UL VW-1, 24#*8C, OD=4.8mm, PU Jacket, Black
* Cable length tolerance: 1M: +50/-0 mm
  1M < L ≦ 3M: +100/-0 mm
  3M < L ≦ 5M: +150/-0 mm
  5M < L ≦ 10M: ±100 mm
  10M < L ≦ 20M: ±200 mm
  20M < L ≦ 30M: ±300 mm
  30M < L ≦ 99M: ±500 mm

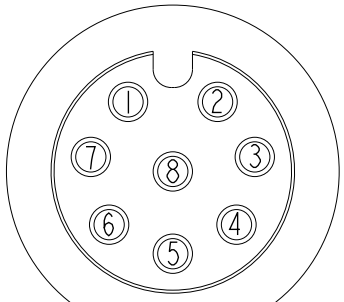

Pin Assignments
Front View

8	Red 紅	Red 紅
7	Blue 藍	Blue 藍
6	Pink 粉	Pink 粉
5	Grey 灰	Grey 灰
4	Yellow 黃	Yellow 黃
3	Green 綠	Green 綠
2	Brown 棕	Brown 棕
1	White 白	White 白
C1	A	B
	Wire Color	
Pin Out		

UNIT:mm

TOLERANCE
±0.5mm

TITLE: △D ACC, SEN, A Code, Y ADA W/ CB

SCALE: 2:1 | SIZE: A4 | SHEET 1 OF 1

REV. D | WC-REV. A.2 | QC: Inspection item

Amphenol LTW
安費諾亮泰企業股份有限公司

ITEM NO	DRAWN BY: Cary liu	DATE: 2013/09/14
DWG NO: SS-080000-F00-YSBXX	CHECKED BY: Mafei	DATE: 2013/09/14
CUSTOMER: ALTW	APPROVED BY: Victor	DATE: 2013/09/14

W10814-03-[redacted]01A2

THIS DOCUMENT IS SUBJECT TO CHANGE WITHOUT NOTICE. IT IS CONFIDENTIAL AND A PROPERTY OF Amphenol LTW. DISCLOSURE TO THIRD PARTY HAS TO BE AUTHORIZED BY Amphenol LTW.